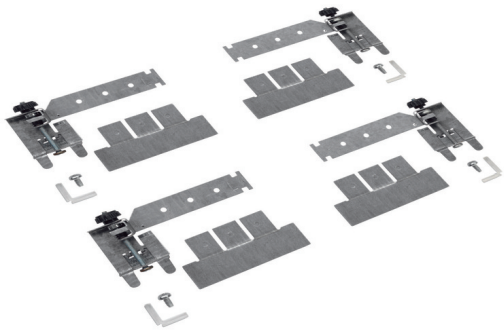

SmartForm TBS460

ZBS460 SMB (1 set = 4PCS)

Ceiling mounting bracket

Reflecting Philips' drive for simplicity and sustainability, SmartForm recessed is a complete family of highly versatile modular and semi-modular luminaires. These luminaires are available with a choice of LED or MASTER TL5 light sources in square and rectangular versions. Designed to fit in a wide range of ceiling types, SmartForm can fulfill the majority of project requirements in most applications.Energy efficiencyAs well as incorporating energy-efficient LED or MASTER TL5 light sources and a range of Philips electronic ballasts, the SmartForm recessed family can be equipped with lighting controls for presence detection and daylight regulation (ActiLume) or daylight regulation only (Luxsense) in order to reduce energy consumption (W/m2 is very low). In this way, this Green Flagship range also reduces the overall cost of ownership as well as CO2 levels, making SmartForm an environmentally friendly choice.SmartForm recessed TBS460 – ultra-flat 'light beam'SmartForm recessed TBS460 'light beam' luminaires are built around superior micro-optics and have a build-in height of a mere 45 mm, making them ideal for applications requiring very flat light fittings, e.g. refurbishment projects where ceiling space may be especially limited.

Product data

General Information	
Suspension accessories	SMB [Ceiling mounting bracket]
Packaging configuration	(4PCS) [4 pieces]
Product Family Code	ZBS460 [TBS460 ACC]

Product Data	
Full product code	871155949307799
Order product name	ZBS460 SMB (1 set = 4PCS)

EAN/UPC – product	8711559493077
Order code	49307799
Numerator – quantity per pack	1
Numerator – packs per outer box	25
Material no. (12NC)	910403202703
Net weight (piece)	0.120 kg