# DATASHEET - M22-PVT45P-MPI



**Emergency-stop pushbutton, D=45mm, non-illuminated, turn-release**

| | |
|---|---|
| **Part no.** | **M22-PVT45P-MPI** |
| **Catalog No.** | **121463** |
| **Alternate Catalog No.** | **M22-PVT45P-MPIQ** |
| **EL-Nummer (Norway)** | **4315244** |

## Delivery program

| | | | |
|---|---|---|---|
| Product range | | | RMQ-Titan |
| Basic function | | | Controlled stop pushbuttons/emergency-stop buttons |
| Single unit/Complete unit | | | Single unit |
| Design | | | Palm-tree shape |
| Diameter | ∅ | mm | 45 |
| Illumination | | | Non-illuminated |
| Approval | | | DGUV Test ET 16107 Sicherheit geprüft tested safety; SUVA CNA INSAI |
| | | | Turn-to-release function |
| Description | | | Tamper-proof according to ISO 13850/EN 418 |
| | | | with mechanical switch position indication<br>Switch position indicator red pushbutton actuated<br>Switch position indication green pushbutton released |
| **Colour** | | | |
| Mushroom head | | | Red |
| | | |  |
| Base | | | yellow |
| | | | RAL 3000 |
| Degree of Protection | | | IP66, IP67, IP69 |
| Connection to SmartWire-DT | | | no |
| **Actuator travel and actuation force as per DIN EN 60947-5-1, K.5.4.1** | | | |
| Minimum force for positive opening | N | | 0 |
| **Instructions** | | | Max. number of contacts: four M22-(C)K01, …10 or two M22-(C)K02, …20, …11 |

## Technical data

### General

| | | | |
|---|---|---|---|
| Standards | | | IEC/EN 60947<br>VDE 0660 |
| Lifespan, mechanical | Operations | x $10^6$ | > 0.1 |
| Operating frequency | Operations/h | | ≦ 600 |
| Actuating force | | n | ≦ 50 |
| Climatic proofing | | | Damp heat, constant, to IEC 60068-2-78<br>Damp heat, cyclic, to IEC 60068-2-30 |
| Degree of Protection | | | IP66, IP67, IP69 |
| Ambient temperature | | | |
| Open | | °C | -25 - +70 |

| | | | |
|---|---|---|---|
| Mounting position | | | As required |
| Mechanical shock resistance | | g | 50<br>Shock duration 11 ms<br>Sinusoidal<br>according to IEC 60068-2-27 |
| shipping classification | | | DNV<br>GL<br>LR |
| | | | 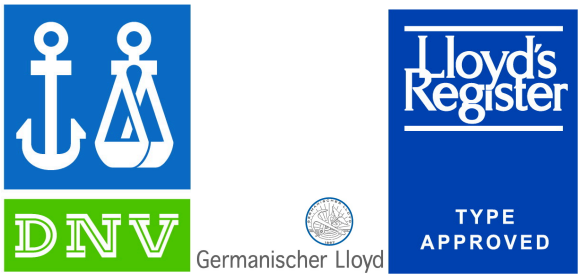 |

## Design verification as per IEC/EN 61439

| | | | |
|---|---|---|---|
| Technical data for design verification | | | |
| Rated operational current for specified heat dissipation | $I_n$ | A | 0 |
| Heat dissipation per pole, current-dependent | $P_{vid}$ | W | 0 |
| Equipment heat dissipation, current-dependent | $P_{vid}$ | W | 0 |
| Static heat dissipation, non-current-dependent | $P_{vs}$ | W | 0 |
| Heat dissipation capacity | $P_{diss}$ | W | 0 |
| Operating ambient temperature min. | | °C | -25 |
| Operating ambient temperature max. | | °C | 70 |
| IEC/EN 61439 design verification | | | |
| 10.2 Strength of materials and parts | | | |
| 10.2.2 Corrosion resistance | | | Meets the product standard's requirements. |
| 10.2.3.1 Verification of thermal stability of enclosures | | | Meets the product standard's requirements. |
| 10.2.3.2 Verification of resistance of insulating materials to normal heat | | | Meets the product standard's requirements. |
| 10.2.3.3 Verification of resistance of insulating materials to abnormal heat and fire due to internal electric effects | | | Meets the product standard's requirements. |
| 10.2.4 Resistance to ultra-violet (UV) radiation | | | Please enquire |
| 10.2.5 Lifting | | | Does not apply, since the entire switchgear needs to be evaluated. |
| 10.2.6 Mechanical impact | | | Does not apply, since the entire switchgear needs to be evaluated. |
| 10.2.7 Inscriptions | | | Meets the product standard's requirements. |
| 10.3 Degree of protection of ASSEMBLIES | | | Does not apply, since the entire switchgear needs to be evaluated. |
| 10.4 Clearances and creepage distances | | | Meets the product standard's requirements. |
| 10.5 Protection against electric shock | | | Does not apply, since the entire switchgear needs to be evaluated. |
| 10.6 Incorporation of switching devices and components | | | Does not apply, since the entire switchgear needs to be evaluated. |
| 10.7 Internal electrical circuits and connections | | | Is the panel builder's responsibility. |
| 10.8 Connections for external conductors | | | Is the panel builder's responsibility. |
| 10.9 Insulation properties | | | |
| 10.9.2 Power-frequency electric strength | | | Is the panel builder's responsibility. |
| 10.9.3 Impulse withstand voltage | | | Is the panel builder's responsibility. |
| 10.9.4 Testing of enclosures made of insulating material | | | Is the panel builder's responsibility. |
| 10.10 Temperature rise | | | Not applicable. |
| 10.11 Short-circuit rating | | | Is the panel builder's responsibility. The specifications for the switchgear must be observed. |
| 10.12 Electromagnetic compatibility | | | Is the panel builder's responsibility. The specifications for the switchgear must be observed. |
| 10.13 Mechanical function | | | The device meets the requirements, provided the information in the instruction leaflet (IL) is observed. |

## Technical data ETIM 7.0

Low-voltage industrial components (EG000017) / Front element for mushroom push-button (EC001038)

Electric engineering, automation, process control engineering / Low-voltage switch technology / Command and alarm device / Front element for mushroom push-button actuators (ecl@ss10.0.1-27-37-12-12 [AKF030014])

| | | |
|---|---|---|
| Colour button | | Red |
| Construction type lens | | Round |
| Diameter cap | mm | 45 |
| Hole diameter | mm | 22.5 |
| Width opening | mm | 0 |
| Height opening | mm | 0 |
| Degree of protection (IP) | | IP67/IP69K |
| Degree of protection (NEMA) | | 4X |
| Type of button | | Flat |
| Suitable for illumination | | No |
| Switching function latching | | Yes |
| Spring-return | | No |
| With front ring | | No |
| Material front ring | | Other |
| Colour front ring | | Other |
| Suitable for emergency stop | | Yes |
| Unlocking method | | Turn-release |

## Approvals

| | | |
|---|---|---|
| North America Certification | | Request filed for UL and CSA |

## Dimensions

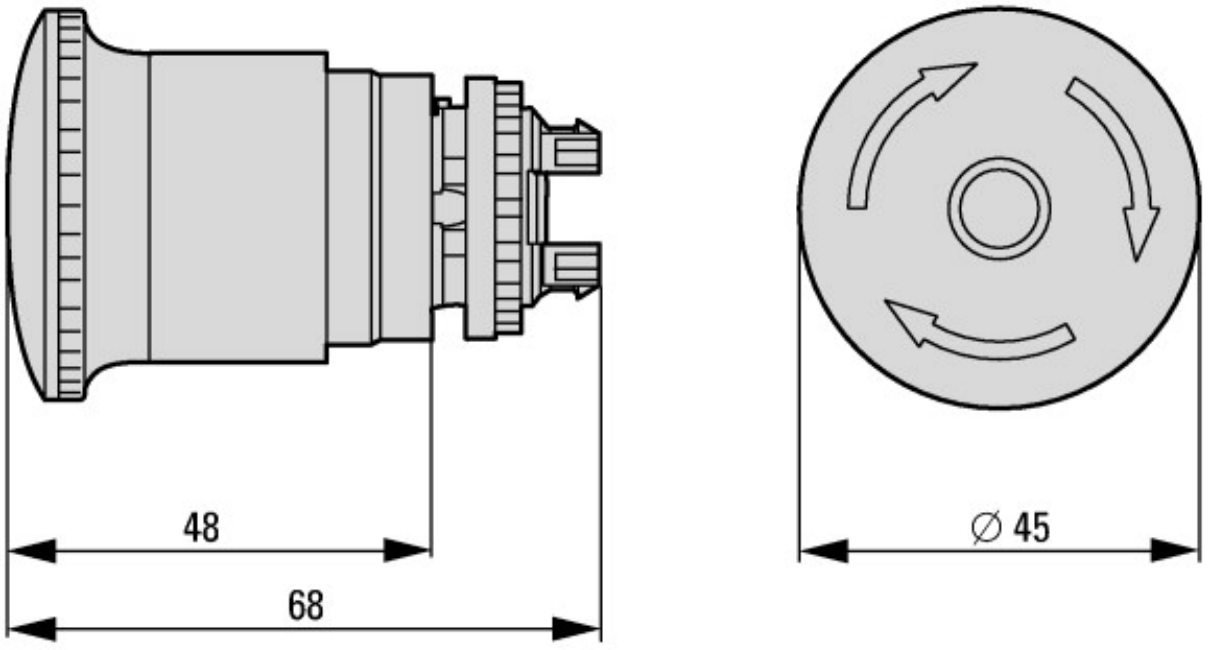

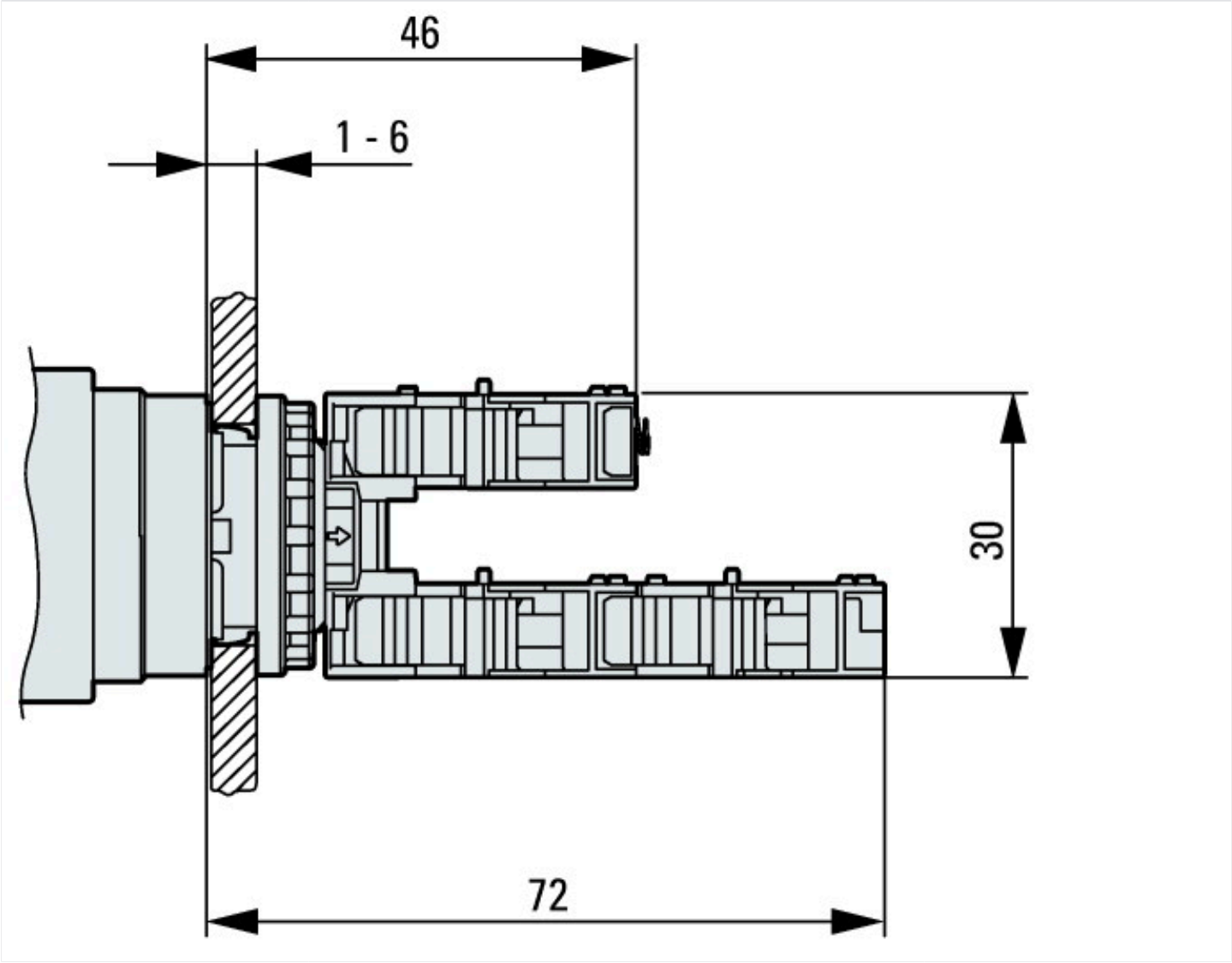


## Assets (links)

### Declaration of CE Conformity

00003204

### Instruction Leaflets

IL04716005Z2018_07

## Additional product information (links)

| | |
|---|---|
| **IL04716005Z RMQ-Titan: Emergency stop buttons, Emergency stop buttons** | |
| IL04716005Z RMQ-Titan: Emergency stop buttons, Emergency stop buttons | ftp://ftp.moeller.net/DOCUMENTATION/AWA_INSTRUCTIONS/IL04716005Z2019_05.pdf |
| **IL04716002Z RMQ-Titan System** | |
| IL04716002Z RMQ-Titan System | ftp://ftp.moeller.net/DOCUMENTATION/AWA_INSTRUCTIONS/IL04716002Z2018_10.pdf |
| DGUV Test Mark Customer Information | http://www.dguv.de/medien/dguv-test-medien/_pdf_zip_doc_ppt/agb-und-pzo/dguv_test_zeichen_infoblatt_kunden.pdf |


© 06/2019 by Eaton Industries GmbH