KYOCERA

KM-2540
KM-3040

PARTS LIST

Published in July 2007
2JBPL070
842JB120
First Edition

NOTES

1. Indicate parts number and parts description together with the machine model name when placing an order.

e.g.	Parts Number	Parts Name	Machine Model	Quantity
	302JB94010	PARTS COVER EMBLEM SP (25ppm)	KM-2540	1
	302JC94010	PARTS COVER EMBLEM SP (30ppm)	KM-3040	1

2. Symbols in the "Parts Number" column.

- Parts with "•" are component parts or sub-assemblies of the assembly appearing immediately above them.

e.g.	Parts Number	Parts Name	Parts Number	Parts Name
	302H093100	PARTS CT-670	•2BL04310	PLATE NUMBER
			•2BL04370	PLATE NUMBER 2

- Parts with "••" are component parts or sub-assembly with "•" appearing immediately above them.

e.g.	Parts Number	Parts Name	Parts Number	Parts Name
	•302H094430	PARTS PULLEY MID FEED ASSY SP	••302H024570	PULLEY MID FEED A ASSY
			••302H024580	PULLEY MID FEED B ASSY

- Parts with "⊙" indicate regular maintenance parts.

3. Items indicated in Description column as (OPTION) are Consumable parts.

CONTENTS

FIG. 1 Covers 2
FIG. 2 Frames 4
FIG. 3 Paper Cassettes 6
FIG. 4 Paper Feed Section 1 8
FIG. 5 Paper Feed Section 2 10
FIG. 6 Paper Feed Section 3 12
FIG. 7 Paper Feed Section 4 14
FIG. 8 Paper Conveying Section 1 16
FIG. 9 Paper Conveying Section 2 18
FIG. 10 Scanner Section 1 20
FIG. 11 Scanner Section 2 22
FIG. 12 Image Formation Section 24
FIG. 13 Developing Section 26
FIG. 14 Fuser Section 28
FIG. 15 Drive Section 1 30
FIG. 16 Drive Section 2 32
FIG. 17 Cooling Section 34
FIG. 18 Duplex Section 36
FIG. 19 Exit Section 1 38
FIG. 20 Exit Section 2 40
FIG. 21 Electrical Components 1 42
FIG. 22 Electrical Components 2 44
FIG. 23 Operation Section 46
FIG. 24 Options 1 48
FIG. 25 Options 2 50
FIG. 26 Options 3 & Tools 52
FIG. 27 Maintenance Kits 54

• INDEX 55

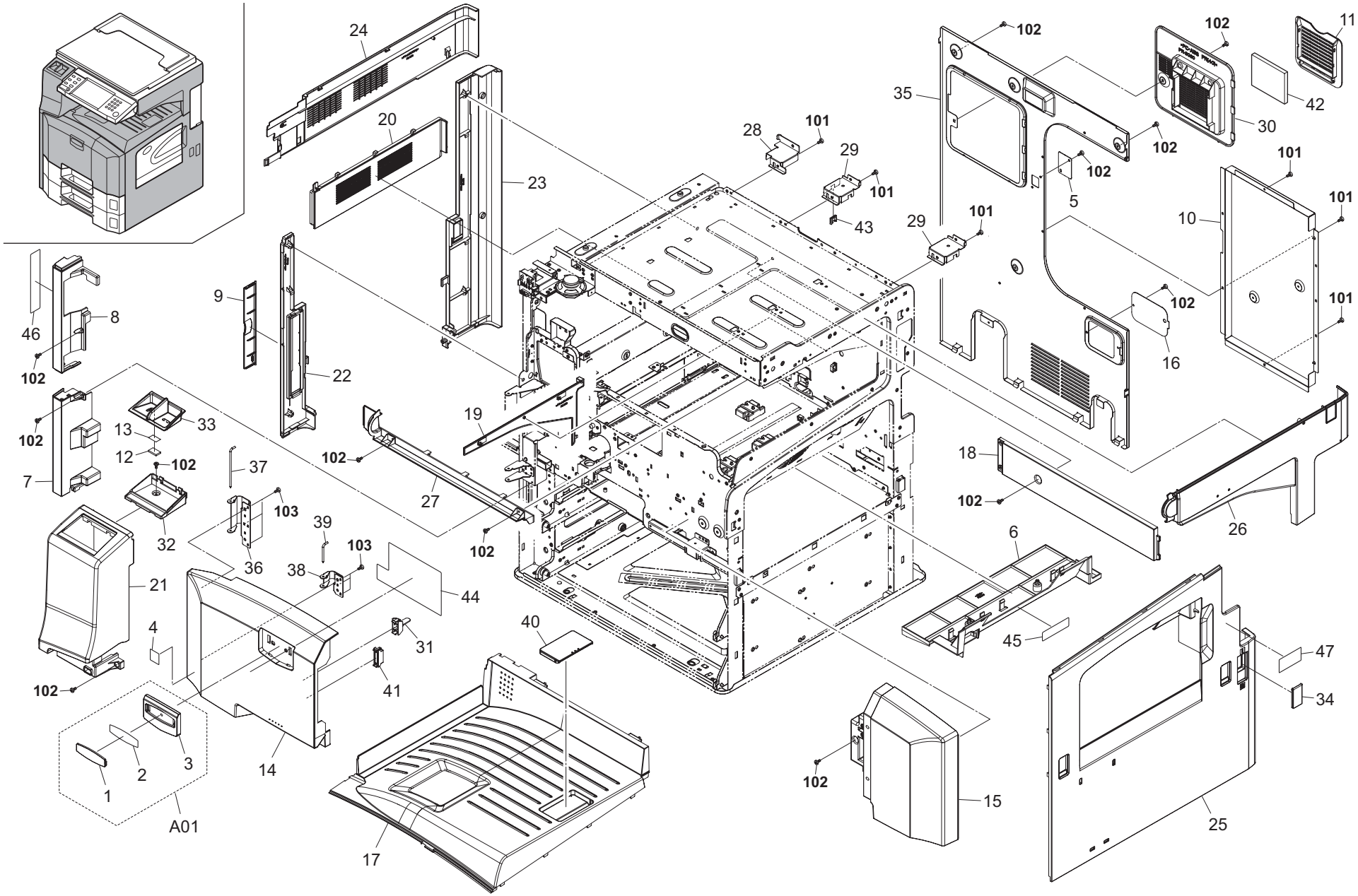
24
20
23
28
101
29
101
43
29
101
35
102
102
11
42
30
102
102
5
101
10
101
101
16
102
9
22
8
46
102
102
13
33
12
102
7
37
103
32
36
39
103
38
21
44
4
31
41
102
3
2
1
A01
14
40
17
19
102
27
102
18
102
26
6
45
47
34
102
15
25

FIG. 1 Covers

2JB/2JC

	Ref. No.	Part.No.	Alternative.	Description	Quantity 120	230	240
⊙	A01	302JB94010	2JB94010	PARTS COVER EMBLEM SP (25ppm)	1	1	1
⊙	A01	302JC94010	2JC94010	PARTS COVER EMBLEM SP (30ppm)	1	1	1
	1	•302GR04140	2GR04140	EMBLEM LOGO	1	1	1
⊙	2	•302GR04340	2GR04340	SEAL EMBLEM	1	1	1
⊙	3	•302JB04030	2JB04030	COVER EMBLEM B (25ppm)	1	1	1
⊙	3	•302JC04080	2JC04080	COVER EMBLEM B (30ppm)	1	1	1
⊙	4	302G634070	2G634070	LABEL ENERGY STAR	1	1	1
⊙	5	2C912430		LID KMAS	1	1	1
	6	302H002270	2H002270	COVER LSU LOW	1	1	1
⊙	7	302H004770	2H004770	COVER FRONT LEFT LOW	1	1	1
⊙	8	302H004780	2H004780	COVER FRONT LEFT MIDDLE	1	1	1
⊙	9	302BL04301	2BL04301	LID COVER LEFT	1	1	1
⊙	10	302JC04070	2JC04070	COVER REAR PWB	1	1	1
⊙	11	302GR04250	2GR04250	COVER OZONE	1	1	1
	12	302GR04370	2GR04370	MAGNET CLIP DISH	1	1	1
⊙	13	302GR04380	2GR04380	SEAL MAGNET	1	1	1
⊙	14	302H004010	2H004010	COVER FRONT	1	1	1
⊙	15	302H004040	2H004040	COVER FRONT RIGHT	1	1	1
⊙	16	302H004690	2H004690	COVER CASS HEATER	1	1	1
⊙	17	302H004060	2H004060	COVER TRAY	1	1	1
⊙	18	302H004070	2H004070	COVER TRAY REAR	1	1	1
⊙	19	302H004080	2H004080	COVER TRAY RIGHT	1	1	1
⊙	20	302H004090	2H004090	COVER EJECT UPPER	1	1	1
⊙	21	302JC04090	2JC04090	COVER FRONT TOP	1	1	1
⊙	22	302H004110	2H004110	COVER LEFT FRONT	1	1	1
⊙	23	302H004120	2H004120	COVER LEFT REAR	1	1	1
⊙	24	302H004130	2H004130	COVER LEFT MIDDLE	1	1	1
⊙	25	302JC04010	2JC04010	COVER RIGHT LOW	1	1	1
⊙	26	302H004150	2H004150	COVER RIGHT MIDDLE	1	1	1
⊙	27	302H004160	2H004160	COVER OPE LOW	1	1	1
	28	302H004570	2H004570	MOUNT REAR COVER L	1	1	1
	29	302H004580	2H004580	MOUNT REAR COVER R	2	2	2
	30	302H004600	2H004600	MOUNT REAR DUCT	1	1	1
	31	302H004650	2H004650	HOLDER SWITCH	1	1	1
	32	302H004220	2H004220	COVER BASE DISH	1	1	1
⊙	33	302H004230	2H004230	CLIP DISH	1	1	1
⊙	34	302H004240	2H004240	COVER MAIN SW	1	1	1
⊙	35	302JC04020	2JC04020	COVER REAR	1	1	1
	36	302H004270	2H004270	HINGE FRONT COVER A	1	1	1
	37	302H004280	2H004280	PIN HINGE A	1	1	1
	38	302H004300	2H004300	HINGE FRONT COVER B	1	1	1
	39	302H004310	2H004310	PIN HINGE B	1	1	1
	40	302H004560	2H004560	STOPPER PAPER	1	1	1
⊙	41	302H004660	2H004660	MAGNET CATCH	1	1	1
⊙	42	302H033180	2H033180	FILTER OZONE B	1	1	1
	43	7YZM210006++H01	YZ038000	ACCESS.EDGING	1	1	1
	44	302H034170	2H034170	LABEL CAUTION	1	1	1
	45	302H034180	2H034180	LABEL CAUTION GEAR	1	1	1
⊙	46	302H034140	2H034140	LABEL CONVEYING JAM	1	1	1
	47	302DC05120	2DC05120	LABEL CAUTION HG	1		

	Ref. No.	Part.No.	Alternative.	Description	Quantity 120	230	240
	101	5MBTPB3006TW++R	B1A53060	BIND T.T SCREW(+) / M3 X 6 CRFREE S-T			
	102	7BB102308H	BB046210	TP TAP-TITE SCREW M3X8			
	103	5MBTPB3008PW++R	B1A63080	BIND T.T SCREW(+) / M3 X 8 CRFREE P-T			

- Parts with "•" are component parts or sub-assemblies of the assembly appearing immediately above them.
- Parts with "⊙" indicate regular maintenance parts.
- Parts with "• •" are component parts or sub-assembly with "•" appearing immediately above them.

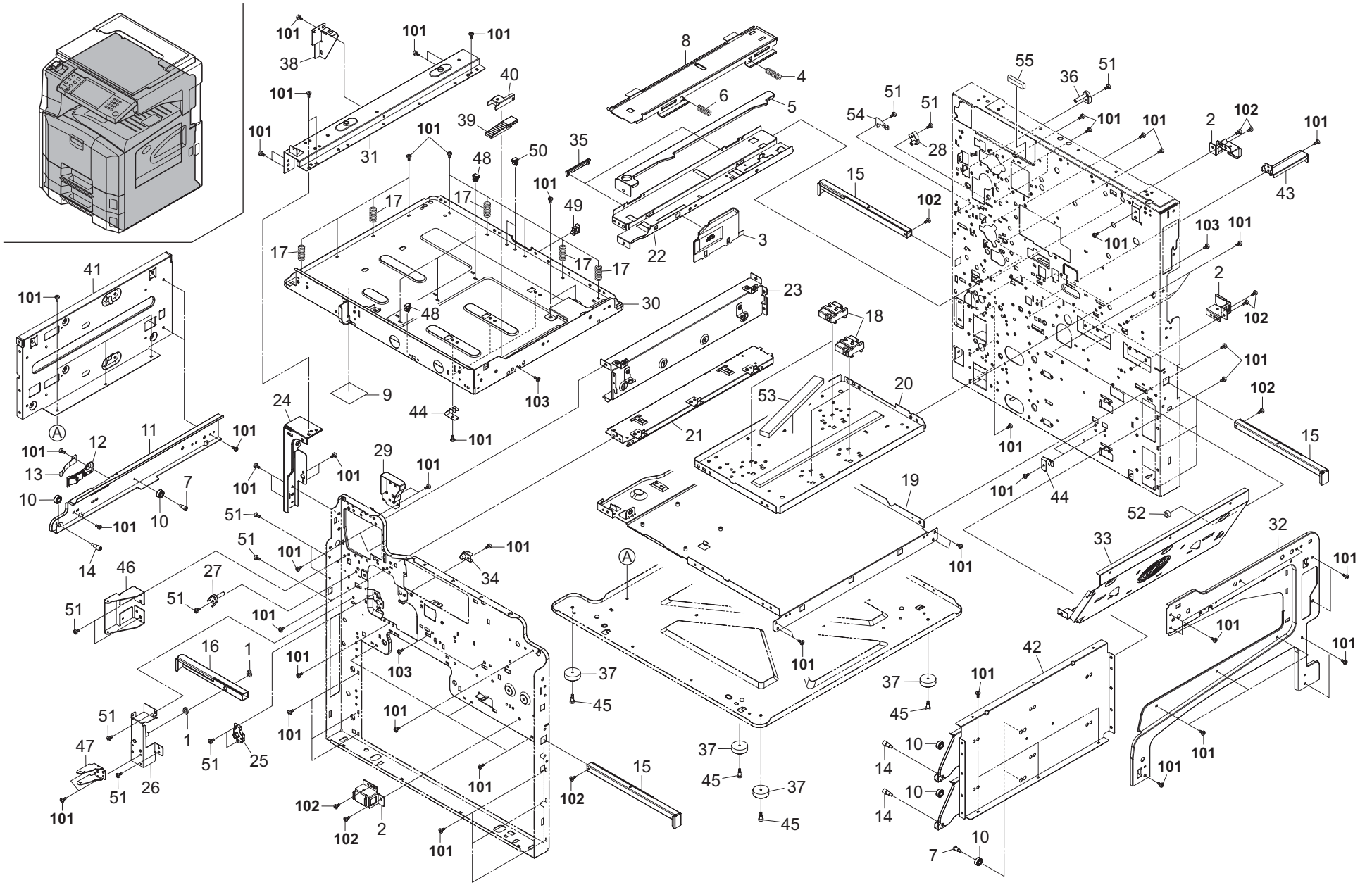
101
38
31
40
39
48
50
35
8
4
6
5
22
3
17
49
30
9
44
103
41
A
12
11
13
10
7
14
24
29
51
46
27
34
16
1
25
47
26
102
2
15
37
45
23
18
20
53
21
19
54
28
55
36
43
52
33
32
42
14
7

FIG. 2 Frames

2JB/2JC

	Ref. No.	Part.No.	Alternative.	Description	Quantity 120	230	240
	1	2BC06910		STOPPER 6	2	2	2
	2	2BL02150		MOUNT RIGHT HANDLE	3	3	3
⊙	3	302H014180	2H014180	GUIDE MIDDLE HOPPER	1	1	1
	4	2C902080		SPRING DEV PUSH	1	1	1
	5	2C902170		LEVER DEV PUSH	1	1	1
	6	2C902590		SPRING DEV PUSH F	1	1	1
	7	2FB06710		PIN CASSETTE RAIL	4	4	4
	8	2FT02200		RAIL DLP	1	1	1
	9	302DA12070	2DA12070	SEAL SCANNER	1	1	1
⊙	10	302FG07020	2FG07020	PULLEY,CASSETTE RAIL	8	8	8
	11	302FG07033	2FG07033	LEFT RAIL CASSETTE	2	2	2
	12	302GR02221	2GR02221	LEVER LOCK CASSETTE	2	2	2
	13	302GR02230	2GR02230	SPRING LEVER	2	2	2
	14	302GR02240	2GR02240	PIN FRONT CASSETTE RAIL	4	4	4
	15	302GR02340	2GR02340	RIGHT HANDLE MACHINE	3	3	3
	16	302GR02350	2GR02350	HANDLE MACHINE	1	1	1
	17	302H002280	2H002280	SPRING ISU LOW	5	5	5
	18	302H002040	2H002040	SPACER LSU	4	4	4
	19	302H002050	2H002050	LOWER PLATE MPF	1	1	1
	20	302H002060	2H002060	LOWER PLATE LSU	1	1	1
	21	302H002070	2H002070	UPPER PLATE DRUM	1	1	1
	22	302H002080	2H002080	LOWER PLATE DLP	1	1	1
	23	302H002090	2H002090	PLATE FUSER GUIDE	1	1	1
	24	302H002100	2H002100	PLATE FRONT LEFT	1	1	1
	25	302H002110	2H002110	SPACER DRUM	1	1	1
	26	302H002120	2H002120	MOUNT HANDLE FRONT LEFT	1	1	1
	27	302H002130	2H002130	PLATE POSITION A	1	1	1
	28	302H002140	2H002140	PLATE POSITION B	1	1	1
	29	302H002150	2H002150	PLATE EXIT FRONT	1	1	1
	30	302H002160	2H002160	BASE SCANNER UNIT	1	1	1
	31	302H002180	2H002180	MOUNT SCANNER UNIT L	1	1	1
	32	302H002190	2H002190	PLATE RIGHT TOP	1	1	1
	33	302H002200	2H002200	PLATE RIGHT MIDDLE	1	1	1
	34	302H002210	2H002210	PLATE POSITION C	1	1	1
	35	302H002220	2H002220	HOLDER DLP RAIL	2	2	2
	36	302H002230	2H002230	PLATE POSITION D	1	1	1
	37	302H002250	2H002250	RUBBER BASE	4	4	4
⊙	38	302H004720	2H004720	SUPPORT COVER LEFT	1	1	1
	39	302H002310	2H002310	ADJUSTOR SCANNER	1	1	1
	40	302H002320	2H002320	MOUNT RUBBER SCANNER	1	1	1
	41	302H002330	2H002330	LOWER LEFT REINFORCE	1	1	1
	42	302H002340	2H002340	LOWER RIGHT REINFORCEMENT	1	1	1
	43	302H002350	2H002350	MOUNT REAR COVER A	1	1	1
	44	302H002360	2H002360	GROUND SCANNER	5	5	5
	45	3CZ02240		PIN,DRAWER SIDE CONVEYING	4	4	4
	46	302H004260	2H004260	MOUNT COVER HINGE A	1	1	1
	47	302H004290	2H004290	MOUNT COVER HINGE B	1	1	1
	48	7YZM390002++H01	YZ012140	ACCESS.CLAMP	4	4	4
	49	7YZM610003++H01	YZ010250	ACCESS SADDLE	1	1	1
	50	7YZM610001++H01	YZ010230	ACCESS SADDLE	2	2	2
	51	303KZ02180	3KZ02180	PIN SCREW BIND 3X6S	13	13	13
	52	302H002380	2H002380	SHIELD SCREW	1	1	1
	53	302H002370	2H002370	SHIELD LSU LOW	1	1	1
	54	302H024560	2H024560	GROUND CONVEYING PLATE	1	1	1
	55	302H002300	2H002300	FILM PROTECT B	1	1	1
	101	5MBTPB3006TW++R	B1A53060	BIND T.T SCREW(+) / M3 X 6 CRFREE S-T			
	102	B1A54080		+BIND TAP-TITE S SCREW M4X08			
	103	7BB102308H	BB046210	TP TAP-TITE SCREW M3X8			

- Parts with "•" are component parts or sub-assemblies of the assembly appearing immediately above them.
- Parts with "⊙" indicate regular maintenance parts.
- Parts with "• •" are component parts or sub-assembly with "•" appearing immediately above them.

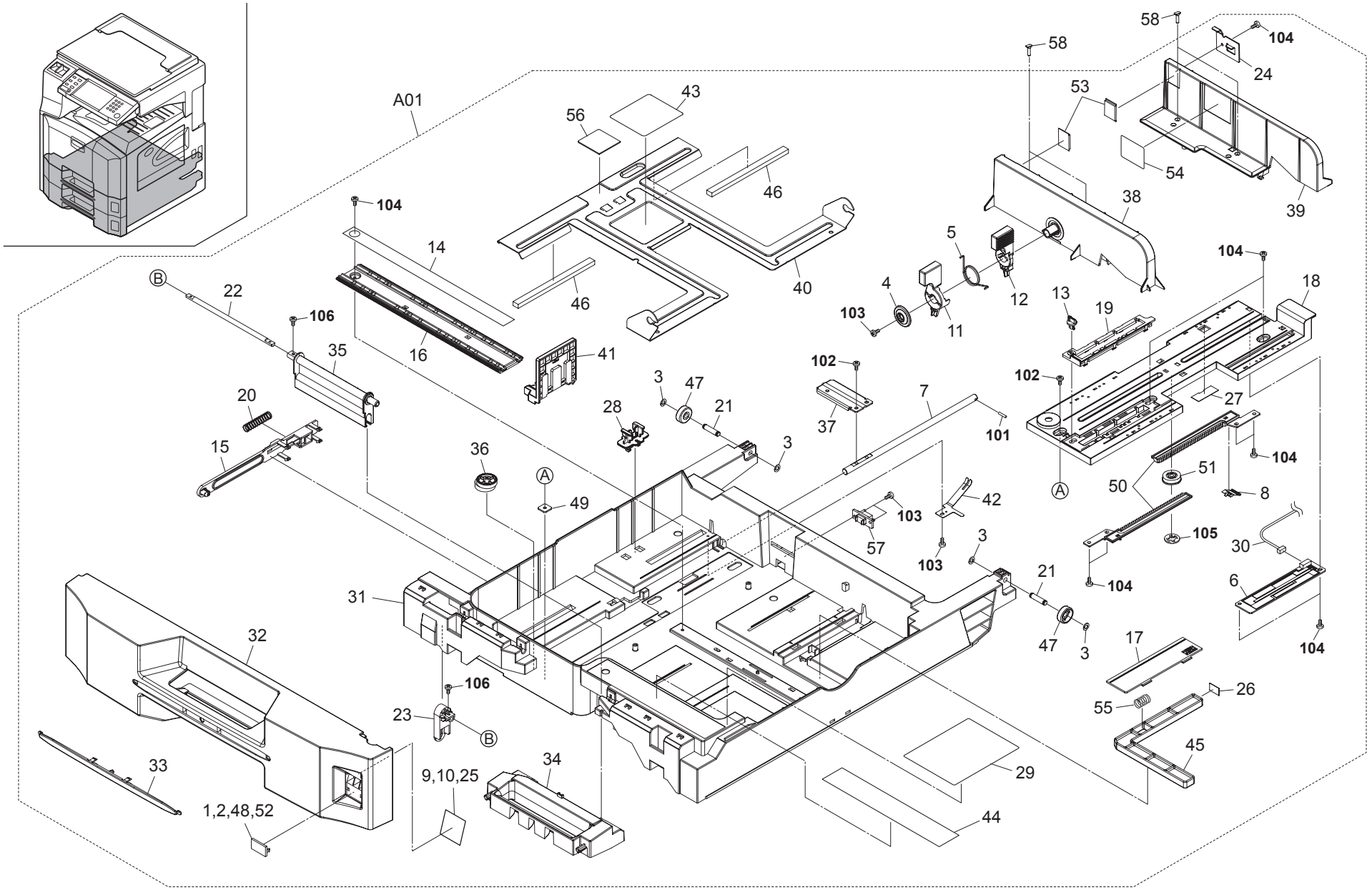
A01
1,2,48,52
3
4
5
6
7
8
9,10,25
11
12
13
14
15
16
17
18
19
20
21
22
23
24
25
26
27
28
29
30
31
32
33
34
35
36
37
38
39
40
41
42
43
44
45
46
47
48
49
50
51
52
53
54
55
56
57
58
101
102
103
104
105
106

FIG. 3 Paper Cassettes

2JB/2JC

	Ref. No.	Part.No.	Alternative.	Description	Quantity 120	230	240
⊙	A01	302H093100	2H093100	PARTS CT-670	2	2	2
⊙	1	•2BL04310		PLATE NUMBER	2	2	2
⊙	2	•2BL04370		PLATE NUMBER 2	2	2	2
	3	•2C904550		CUT WASHER 5	8	8	8
	4	•2FB07050		PIN CURSOR	2	2	2
	5	•2FB07060		SPRING CURSOR	2	2	2
⊙	6	•2FG01020		SIZE DETECTION ASS'Y	2	2	2
	7	•302AR07041	2AR07041	SHAFT,WORK PLATE	2	2	2
⊙	8	•302BC07861	2BC07861	TERMINAL,PAPER SIZE DETECTION	2	2	2
⊙	9	•302FB05200	2FB05200	PLATE SIZE C	2	2	2
⊙	10	•302FB05210	2FB05210	PLATE SIZE IN	2	2	2
	11	•302FB07032	2FB07032	LEVER CURSOR A	2	2	2
	12	•302FB07042	2FB07042	LEVER CURSOR B	2	2	2
	13	•302FB07420	2FB07420	PIN CASSETTE	2	2	2
⊙	14	•302FZ09141	2FZ09141	LABEL PAPER SIZE R1	2	2	2
	15	•302GR09051	2GR09051	LEVER CASSETTE	2	2	2
	16	•302GR09060	2GR09060	RAIL CURSOR R	2	2	2
	17	•302GR09070	2GR09070	LID PAPER SIZE	2	2	2
	18	•302GR09082	2GR09082	RAIL CURSOR A	2	2	2
	19	•302GR09090	2GR09090	SUPPORT PLATE	2	2	2
	20	•302GR09120	2GR09120	SPRING LEVER CASSETTE	2	2	2
	21	•302GR09130	2GR09130	SHAFT PULLEY	4	4	4
	22	•302GR09140	2GR09140	SHAFT HANDLE	2	2	2
⊙	23	•302GR09150	2GR09150	WORK PLATE HANDLE	2	2	2
	24	•302GR09160	2GR09160	STOPPER PAPER	2	2	2
⊙	25	•302GR09201	2GR09201	PLATE SIZE INCH	2	2	2
	26	•302GR09210	2GR09210	SEAL DETECTION PLATE	2	2	2
	27	•302GR09250	2GR09250	FILM PWB COVER	2	2	2
	28	•302GR09991	2GR09991	LIFT LOCK	2	2	2
⊙	29	•302GR34022	2GR34022	LABEL PAPER SIZE	2	2	2
	30	•302GR46450	2GR46450	WIRE CASSETTE UNIT	2	2	2
	31	•302H009010	2H009010	CASSETTE	2	2	2
⊙	32	•302H009020	2H009020	COVER CASSETTE	2	2	2
⊙	33	•302H009030	2H009030	COVER CASSETTE HANDLE	2	2	2
	34	•302H009040	2H009040	HANDLE CASSETTE	2	2	2
	35	•302H009050	2H009050	JOINT HANDLE CASSETTE	2	2	2
	36	•302H009060	2H009060	ADJUSTING PLATE CASSETTE	2	2	2
	37	•302H009070	2H009070	WORK PLATE LIFT CASSETTE	2	2	2
	38	•302H009080	2H009080	FRONT CURSOR CASSETTE	2	2	2
	39	•302H009090	2H009090	REAR CURSOR CASSETTE	2	2	2
	40	•302H009100	2H009100	BASE CASSETTE	2	2	2
	41	•302H009110	2H009110	CURSOR C CASSETTE	2	2	2
	42	•302H009120	2H009120	PLATE CASSETTE EARTH	2	2	2
	43	•302H034070	2H034070	LABEL PAPER SET	2	2	2
⊙	44	•302H034120	2H034120	LABEL CASSETTE OPERATION	2	2	2
	45	•33907170		DETECTION PLATE,PAPER SIZE	2	2	2
	46	•33907210		CUSHION,CASSETTE WORK PLATE	4	4	4
	47	•34907150		PULLEY,CASSETTE	4	4	4
⊙	48	•3CF04060		PLATE NUMBER4	2	2	2
	49	•3CY06030		RETAINER M4	2	2	2
⊙	50	•3CY06090		RACK CURSOR	4	4	4
⊙	51	•3CY06100		GEAR 20,CURSOR	2	2	2
⊙	52	•5MVX321CE001	3CF04050	PLATE NUMBER 3 /3CF0405 A4	2	2	2
⊙	53	•60907170		CUSHION,CASSETTE R	4	4	4
⊙	54	•61705110		LABEL,PAPER UPPER LIMIT	2	2	2
	55	•66106080		SPRING,PAD	2	2	2
	56	•66107100		PAD,CASSETTE	2	2	2
⊙	57	•7YCC08B2046+H01	YC026110	CONNECTOR	2	2	2
	58	302GR09220	2GR09220	PIN CURSOR	8	8	8
	101	5MBP2514WXSP	E0025250	SPRING PIN /M2.5 X 14 S-BLK			
	102	B4B04080		+TP-A SCREW M4X08(TRIVALENT CHROMATIN			
	103	5MBTPB3008PW++R	B1A63080	BIND T.T SCREW(+) / M3 X 8 CRFREE P-T			
	104	BAA63080		+TP TAP-TITE P SCREW M3X08			
	105	5MBCS4025XSP	D4000400	CS STOP RING /X 4 X .25T S-BLK			
	106	B1B03050		+BIND SCREW M3X05(TRIVALENT CHROMATI			

- Parts with "•" are component parts or sub-assemblies of the assembly appearing immediately above them.
- Parts with "⊙" indicate regular maintenance parts.
- Parts with "• •" are component parts or sub-assembly with "•" appearing immediately above them.

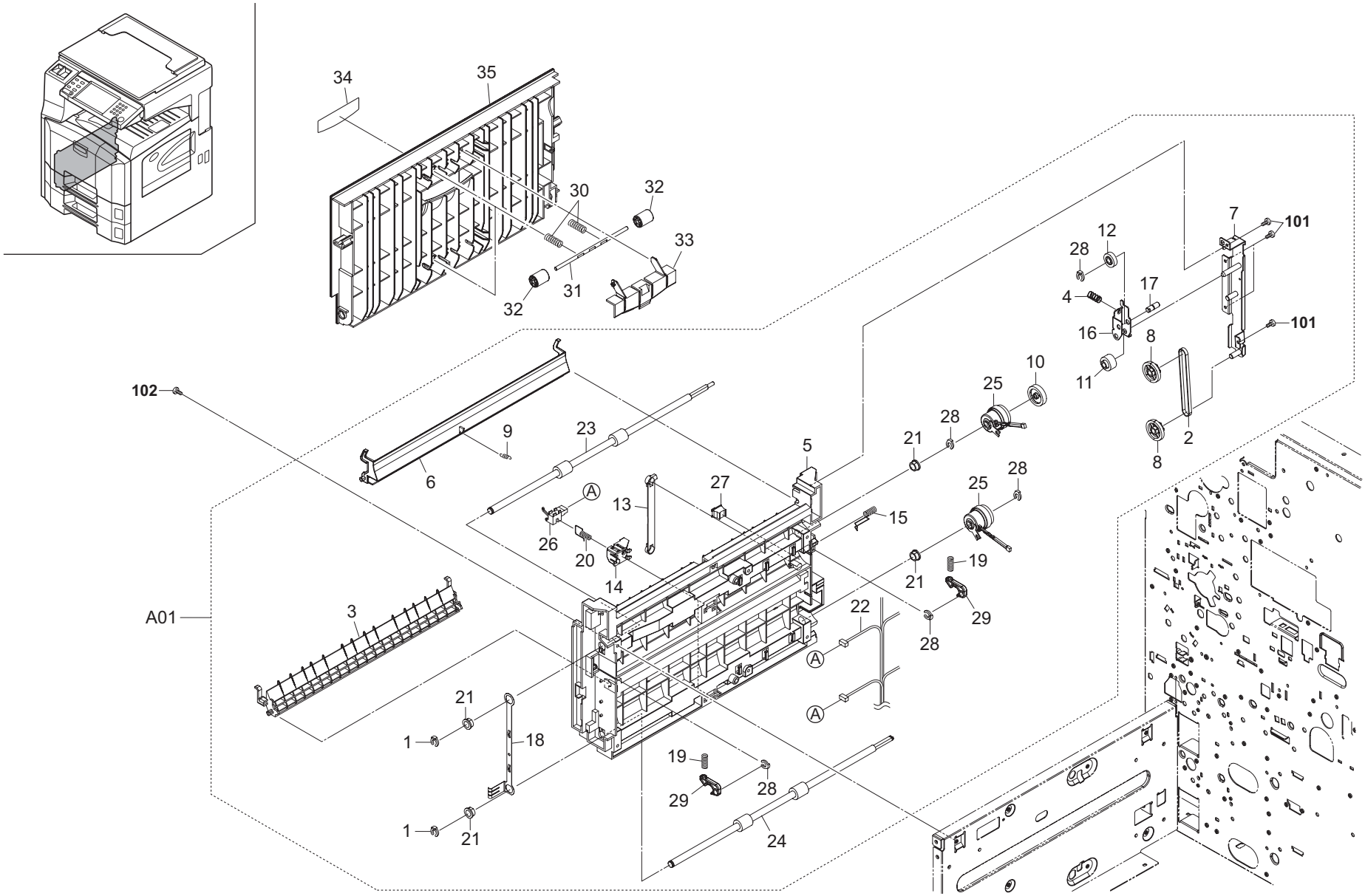
34
35
30
32
33
31
32
102
9
23
6
A
13
27
5
26
20
14
15
21
28
25
10
12
28
4
17
16
11
8
7
101
101
2
8
25
28
19
21
29
28
22
A
A
A01
3
21
1
18
19
29
28
1
21
24

FIG. 4 Paper Feed Section 1

2JB/2JC

	Ref. No.	Part.No.	Alternative.	Description	Quantity 120	230	240
⊙	A01	302H093080	2H093080	PARTS VERTICAL FEEED UNIT	1	1	1
	1	•2BC06980		STOPPER 5	2	2	2
⊙	2	•2BL06320		BELT CONVEYING	1	1	1
	3	•2BL06330		GUIDE B FEED	1	1	1
	4	•2FG06070		SPRING FEED JOINT	1	1	1
	5	•302H006010	2H006010	FRAME VERTICAL FEED	1	1	1
	6	•302H006040	2H006040	GUIDE VERTICAL	1	1	1
	7	•302H006050	2H006050	PLATE VERTICAL DRIVE	1	1	1
⊙	8	•302H006080	2H006080	GEAR Z31S-P18 FEED	2	2	2
	9	•302H006090	2H006090	SPRING GUIDE VERTICAL	1	1	1
⊙	10	•302H006100	2H006100	GEAR Z30S VERTICAL IDLE	1	1	1
⊙	11	•302H006110	2H006110	GEAR Z20S JOINT FEED A	1	1	1
⊙	12	•302H006120	2H006120	GEAR Z20S JOINT FEED B	1	1	1
	13	•302H006200	2H006200	STRAP VERTICAL COVER	1	1	1
	14	•302H006300	2H006300	HOLDER FEED SWITCH	2	2	2
	15	•302H006360	2H006360	SPRING EARTH SW	1	1	1
	16	•302H006390	2H006390	PLATE VERTICAL JOINT A	1	1	1
	17	•302H006400	2H006400	PIN VERTICAL	1	1	1
	18	•302H006410	2H006410	PLATE EARTH VERTICAL	1	1	1
	19	•302H006420	2H006420	SPRING COVER HOOK	2	2	2
	20	•302H006430	2H006430	SPRING EARTH PI	2	2	2
	21	•302H024360	2H024360	BUSH 8 EW	4	4	4
	22	•302H046210	2H046210	WIRE CONVEYING UNIT	1	1	1
⊙	23	•302H094090	2H094090	PARTS ROLLER VERTICAL FEED A SP	1	1	1
⊙	24	•302H094100	2H094100	PARTS ROLLER VERTICAL FEED B SP	1	1	1
⊙	25	•302H094210	2H094210	PARTS CLUTCH FEED SP	2	2	2
⊙	26	•302H094230	2H094230	PARTS SWITCH CONVEYING SP	2	2	2
⊙	27	•35927420		SWITCH,SIZE	1	1	1
	28	•5MVX111DN003	2A806250	RING STOPPER /A-49 FEED A4	5	5	5
⊙	29	•5MVX421DN003	2BL06490	LOCK COVER R /40283V0068 A4	2	2	2
	30	302H006350	2H006350	SPRING FEED	4	4	4
	31	302H024090	2H024090	SHAFT MID FEED	2	2	2
⊙	32	3HY07120		PULLEY 15 DUPLEX	4	4	4
	33	302H006380	2H006380	COVER VERTICAL INNER	1	1	1
	34	302H034050	2H034050	LABEL VERTICAL COVER	1	1	1
⊙	35	302H006210	2H006210	COVER LEFT FEED	1	1	1

	Ref. No.	Part.No.	Alternative.	Description	Quantity 120	230	240
	101	5MBTPB3008PW++R	B1A63080	BIND T.T SCREW(+) / M3 X 8 CRFREE P-T			
	102	5MBTPB3006TW++R	B1A53060	BIND T.T SCREW(+) / M3 X 6 CRFREE S-T			

- Parts with "•" are component parts or sub-assemblies of the assembly appearing immediately above them.
- Parts with "⊙" indicate regular maintenance parts.
- Parts with "• •" are component parts or sub-assembly with "•" appearing immediately above them.

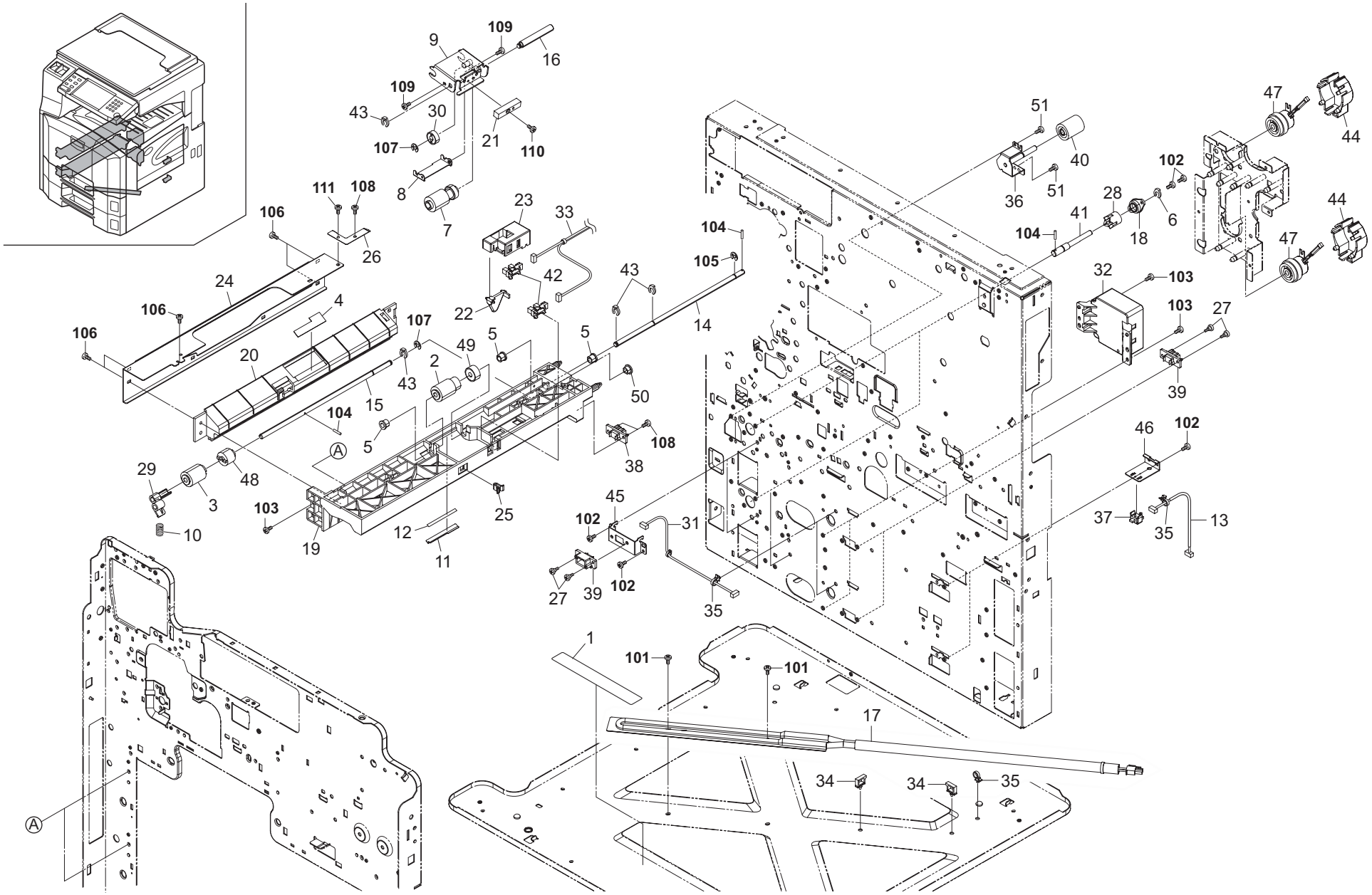
1
2
3
4
5
6
7
8
9
10
11
12
13
14
15
16
17
18
19
20
21
22
23
24
25
26
27
28
29
30
31
32
33
34
35
36
37
38
39
40
41
42
43
44
45
46
47
48
49
50
51
101
102
103
104
105
106
107
108
109
110
111
A

FIG. 5 Paper Feed Section 2

	Ref. No.	Part.No.	Alternative.	Description	Quantity 120	230	240
	1	20305130		LABEL L,HIGH TEMPERATURE CAUTION(EXP)	1	1	1
⊙	2	2AR07220		PULLEY,PAPER FEED	2	2	2
⊙	3	2AR07230		PULLEY,SEPARATION	2	2	2
	4	2AR07660		GUIDE FILM,SEPARATION PULLEY	2	2	2
	5	2BC06520		BUSHING 6,REGISTRATION	6	6	6
	6	2BC06910		STOPPER 6	2	2	2
⊙	7	2BJ06010		PULLEY FEED A	2	2	2
	8	2BL07900		PLATE LEADING FEED	2	2	2
	9	2BL07910		SUPPORT PLATE FEED	2	2	2
	10	2BL07990		SPRING SEPARATION	2	2	2
	11	302GR06230	2GR06230	PLATE GUIDE FEED	2	2	2
	12	302GR06240	2GR06240	TAPE VHB	2	2	2
	13	302H046600	2H046600	WIRE CASSETTE SW	2	2	2
	14	302AR07251	2AR07251	SHAFT,PAPER FEED	2	2	2
	15	302AR07261	2AR07261	SHAFT,SEPARATION	2	2	2
	16	302AR07271	2AR07271	SHAFT,LEADING FEED	2	2	2
⊙	17	302FB25061	2FB25061	HEATER DEHUMIDIFIER 240		1	1
⊙	17	302FB25052	2FB25052	HEATER DEHUMIDIFIER 120	1		
	18	302FG07070	2FG07070	BUSHING,PRIMARY PAPER FEED	2	2	2
	19	302FG07251	2FG07251	UPPER HOUSING,PAPER FEED	2	2	2
	20	302FG07260	2FG07260	LOWER HOUSING,PAPER FEED	2	2	2
	21	302FG07271	2FG07271	WEIGHT,LEADING FEED PULLEY	2	2	2
	22	302FG07290	2FG07290	ACTUATOR,PAPER EMPTY	2	2	2
	23	302FG07300	2FG07300	HOLDER,ACTUATOR	2	2	2
	24	302FG07310	2FG07310	REINFORCEMENT PRIMARY PAPER FEED	2	2	2
	25	302FG07320	2FG07320	STOPPER,SUPPORT PLATE	2	2	2
	26	302FG07330	2FG07330	GROUND PLATE,PRIMARY PAPER FEED	2	2	2
	27	302FZ03070	2FZ03070	RETAINING PIN DRAWER	8	8	8
	28	302FZ32070	2FZ32070	COUPLING PAPER FEED	2	2	2
	29	302GR06201	2GR06201	LEVER SEPARATION RELEASE	2	2	2
⊙	30	34922420		GEAR 15	2	2	2
	31	302H046690	2H046690	WIRE CASSETTE SIZE	2	2	2
⊙	32	302GR44112	2GR44112	MOTOR LIFT	2	2	2
	33	302GR46430	2GR46430	WIRE PRIMARY FEED UNIT1	2	2	2
	34	7YZM610002++H01	YZ010240	ACCESS SADDLE	2	2	2
	35	M21AH010		BAND,RSG-130-V0(KITAGAWA)	5	5	5
	36	302H006140	2H006140	BRACKET GEAR JOINT FEED	1	1	1
⊙	37	66127010		SWITCH,COVER OPEN	2	2	2
⊙	38	7YCC08B2046+H01	YC026110	CONNECTOR	2	2	2
⊙	39	7YCC08B2046+H02	YC026130	CONNECTOR	4	4	4
⊙	40	302H006180	2H006180	GEAR Z25S FEED C	1	1	1
	41	302H006190	2H006190	SHAFT PRIMARY FEED	2	2	2
⊙	42	5FNXGP1A73A++02	2DC27180	PT.SENSOR GP1A73AJ00/ BK	4	4	4
	43	5MVX111DN003	2A806250	RING STOPPER /A-49 FEED A4	8	8	8
	44	302H006240	2H006240	HOLDER FEED CLUTCH	2	2	2
	45	302H006340	2H006340	MOUNT FEED DRAWER	2	2	2
	46	302H006370	2H006370	MOUNT CASSETTE SWITCH	2	2	2
⊙	47	302H094210	2H094210	PARTS CLUTCH FEED SP	2	2	2
⊙	48	33906070		TORQUE LIMITER,PAPER FEED	2	2	2
⊙	49	33906160		GEAR 16,PAPER FEED	2	2	2
	50	34806040		LOWER BUSHING,PAPER FEED	2	2	2
	51	303KZ02180	3KZ02180	PIN SCREW BIND 3X6S	2	2	2
	101	B1A54080		+BIND TAP-TITE S SCREW M4X08			
	102	5MBTPB3006TW++R	B1A53060	BIND T.T SCREW(+) / M3 X 6 CRFREE S-T			
	103	7BB102308H	BB046210	TP TAP-TITE SCREW M3X8			
	104	5MBP2012WXSP	E0020120	SPRING PIN / M2 X 12 S-BLK			
	105	7BD105060+++H01	BD018620	E STOP RING E-5			
	106	5MBTPB3010PW++R	B1B63100	BIND T.T SCREW(+) / M3 X 10 CRFREE P-T			
	107	D1A00400		STOP RING E-4(TRIVALENT CHROMATING)			
	108	5MBTPB3008PW++R	B1A63080	BIND T.T SCREW(+) / M3 X 8 CRFREE P-T			
	109	B1B03040		+BIND SCREW M3X04(TRIVALENT CHROMATI			
	110	7BB003310H	BB023700	COUNTER-SUNK HEAD SCREW FHM3X10			
	111	B1B03050		+BIND SCREW M3X05(TRIVALENT CHROMATI			

- Parts with "•" are component parts or sub-assemblies of the assembly appearing immediately above them.
- Parts with "⊙" indicate regular maintenance parts.
- Parts with "• •" are component parts or sub-assembly with "•" appearing immediately above them.

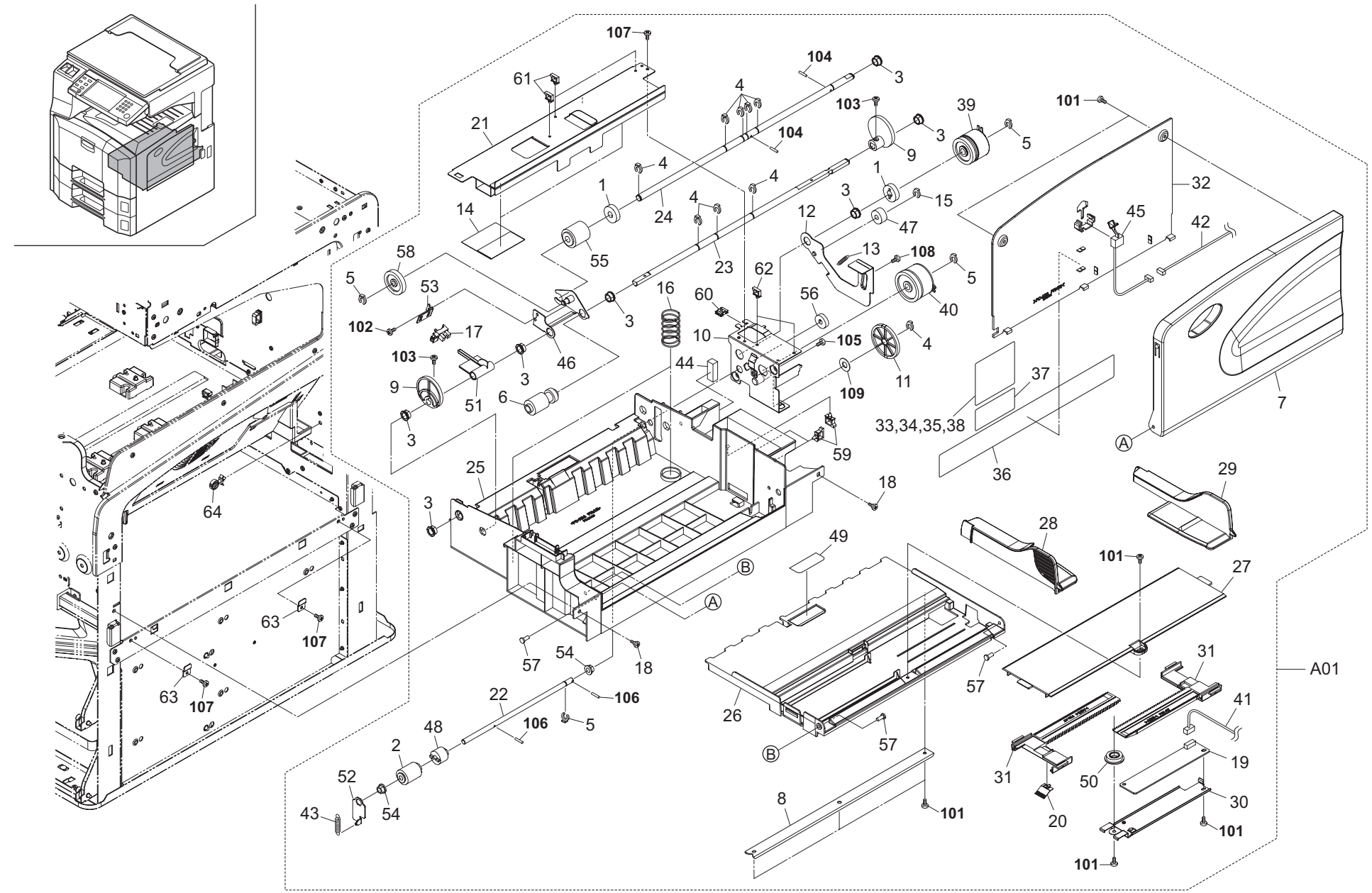
107
104
3
61
4
103
39
101
21
104
3
5
9
4
1
4
1
32
14
24
4
3
15
45
12
47
42
55
23
13
108
58
62
5
5
53
16
60
56
40
102
17
3
10
105
4
103
46
44
11
9
3
109
37
51
6
7
3
33,34,35,38
59
A
25
36
29
18
64
3
28
49
101
27
B
A
63
107
57
54
18
31
A01
63
107
106
57
22
41
106
5
26
48
57
2
B
19
31
50
52
8
30
43
54
101
20
101
101

FIG. 6 Paper Feed Section 3

2JB/2JC

	Ref. No.	Part.No.	Alternative.	Description	Quantity 120	230	240
⊙	A01	302H093110	2H093110	PARTS MPF UNIT	1	1	1
⊙	1	•29415100	45729416	GEAR,TONER ROLLER	2	2	2
⊙	2	•2AR07230		PULLEY,SEPARATION	1	1	1
⊙	3	•2BC06510		BUSHING 8	7	7	7
	4	•2BC06910		STOPPER 6	9	9	9
	5	•2BC06980		STOPPER 5	4	4	4
⊙	6	•2BJ06010		PULLEY FEED A	1	1	1
	7	•2BL06600		COVER BYPASSTRAY	1	1	1
	8	•2BL06650		STAY LIFTPLATE	1	1	1
	9	•2BL06680		CAM BYPASS	2	2	2
	10	•2BL06690		MOUNT BYPASSDRIVE	1	1	1
⊙	11	•2BL06720		GEAR 55/15	1	1	1
	12	•2BL06850		JOINT RETARD	1	1	1
	13	•2BL06870		SPRING JOINTRETARD	1	1	1
	14	•2BL06880		FILM BYPASS	2	2	2
	15	•2BL06990		STOPPER GEAR 8-25	1	1	1
	16	•2BL07860		SPRING BYPASS	2	2	2
⊙	17	•2C927210		SENSOR 248NL1	1	1	1
	18	•2FB20860		PIN FUSER COVER	2	2	2
⊙	19	•2FG01020		SIZE DETECTION ASS'Y	1	1	1
⊙	20	•302BC07861	2BC07861	TERMINAL,PAPER SIZE DETECTION	1	1	1
	21	•302BL06531	2BL06531	COVER BYPASSUNIT	1	1	1
	22	•302BL06751	2BL06751	SHAFT RETARD	1	1	1
	23	•302BL06761	2BL06761	SHAFT BYPASSCAM	1	1	1
	24	•302BL06771	2BL06771	SHAFT BYPASS	1	1	1
	25	•302GR08011	2GR08011	BASE BYPASS	1	1	1
	26	•302GR08021	2GR08021	PLATE LIFT BYPASS	1	1	1
	27	•302GR08030	2GR08030	COVER CURSOR	1	1	1
	28	•302GR08040	2GR08040	FRONT CURSOR BYPASS	1	1	1
	29	•302GR08050	2GR08050	REAR CURSOR BYPASS	1	1	1
	30	•302GR08060	2GR08060	MOUNT SIZE PWB	1	1	1
	31	•302GR08071	2GR08071	RACK CURSOR	2	2	2
⊙	32	•302GR08080	2GR08080	TABLE BYPASS	1	1	1
	33	•302GR34091	2GR34091	LABEL SET PAPER CAUTION A	1	1	1
	34	•302GR34102	2GR34102	LABEL SET PAPER CAUTION E	1	1	1
	35	•302GR34111	2GR34111	LABEL SET PAPER CAUTION J	1	1	1
	36	•302GR34122	2GR34122	LABEL BYPASS SIZE	1	1	1
	37	•302GR34260	2GR34260	LABEL SET PAPER CAUTION	1	1	1
	38	•302GR34411	2GR34411	LABEL SET PAPER CAUTION TW	1	1	1
⊙	39	•302GR44120	2GR44120	CLUTCH FEED	1	1	1
⊙	40	•302GR44131	2GR44131	CLUTCH FEED B	1	1	1
	41	•302GR46230	2GR46230	WIRE BYPASS UNIT	1	1	1
	42	•302GR46270	2GR46270	WIRE BYPASS TRAY	1	1	1
	43	•302H008290	2H008290	SPRING RETARD	1	1	1
	44	•302H008330	2H008330	CUSHION MPF	1	1	1
⊙	45	•302H044100	2H044100	SWITCH BYPASS SIZE	1	1	1
	46	•303A206131	3A206131	JOINT,BYPASS PICKUP	1	1	1
⊙	47	•33906160		GEAR 16,PAPER FEED	1	1	1
⊙	48	•33906430		TORQUE LIMITER,BYPASS	1	1	1
	49	•34806490		FRICTION PLATE,BYPASS LEADING FEED	1	1	1
⊙	50	•34907141		GEAR 18,CASSETTE	1	1	1
	51	•3A206100		ARM,BYPASS PE	1	1	1
	52	•3A206170		HOLDER,RETARD	1	1	1
	53	•3A206210		MOUNT,BYPASS PE SWITCH	1	1	1
	54	•3CY07080		BUSHING 6	2	2	2
⊙	55	•61706770		UPPER PULLEY,BYPASS	1	1	1
⊙	56	•66006810		GEAR,16 BYPASS PULLEY	1	1	1
	57	•66007310		PIN,CASSETTE WORK PLATE	3	3	3
⊙	58	•72321350		GEAR 30, FD EJECT IDLE	1	1	1
	59	•7YZM610003++H01	YZ010250	ACCESS SADDLE	3	3	3
	60	•M2104350		EDGING,EDS-0607M(KITAGAWA)	1	1	1
	61	•M2105210		MINI CLAMP,UAMS-02WL-0(KITAGAWA)	3	3	3
	62	•M2105740		MINIATURE CLAMP,UAMS-05S-2	2	2	2
	63	2BL06890		PLATE BYPASS HOLD	2	2	2
	64	5MVX431NN001	3D302100	SPACING CLIP /VSC-10 XX	1	1	1
	101	BAA63080		+TP TAP-TITE P SCREW M3X08			
	102	B1B03050		+BIND SCREW M3X05(TRIVALENT CHROMATI			
	103	B1B03080		+BIND SCREW M3X08			
	104	5MBP2014WXSP	E0020140	SPRING PIN / M2 X 14 S-BLK			
	105	5MBTPB3006PW++R	B1B63060	BIND T.T SCREW(+) / M3 X 6 CRFREE P-T			
	106	5MBP2010WXSP	E0020100	SPRING PIN / M2 X 10 S-BLK			
	107	5MBTPB3006TW++R	B1A53060	BIND T.T SCREW(+) / M3 X 6 CRFREE S-T			
	108	BAB63060		+TP TAP-TITE P SCREW M3X06			
	109	C2895130		SHIM 8.2-0.5T			

- Parts with "•" are component parts or sub-assemblies of the assembly appearing immediately above them.
- Parts with "⊙" indicate regular maintenance parts.
- Parts with "• •" are component parts or sub-assembly with "•" appearing immediately above them.

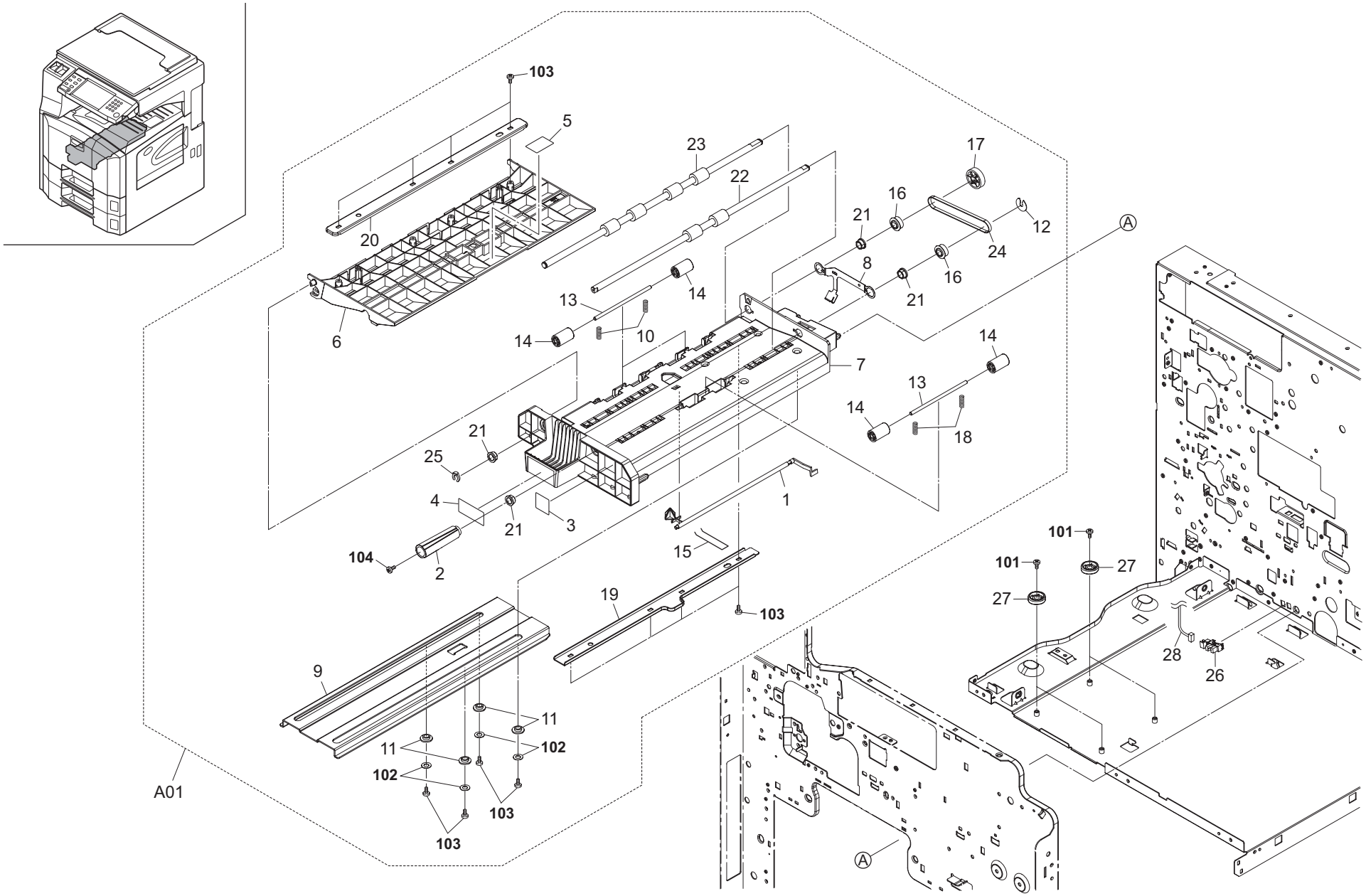
103
5
23
22
17
16
21
12
24
20
8
16
21
14
13
14
10
6
7
14
13
14
18
21
25
4
21
3
1
104
2
15
19
103
9
11
11
102
102
103
103
A01
101
101
27
27
28
26
A
A

FIG. 7 Paper Feed Section 4

2JB/2JC

	Ref. No.	Part.No.	Alternative.	Description	Quantity 120	230	240
⊙	A01	302H093120	2H093120	PARTS MPF FEED UNIT	1	1	1
	1	•2BL06730		ACTUATOR BYPASSFEED	1	1	1
	2	•2BL06830		DIAL BYPASSFEED	1	1	1
	3	•302GR34050	2GR34050	LABEL JAM A1	1	1	1
	4	•302GR34060	2GR34060	LABEL JAM A2	1	1	1
	5	•302GR34070	2GR34070	LABEL JAM A3	1	1	1
	6	•302H008010	2H008010	GUIDE MPF FEED	1	1	1
	7	•302H008020	2H008020	BASE MPF FEED	1	1	1
	8	•302H008050	2H008050	GROUND PLATE MPF	1	1	1
	9	•302H008080	2H008080	RAIL MPF FEED	1	1	1
	10	•302H008140	2H008140	SPRING BYPASSFFED	4	4	4
	11	•302H008170	2H008170	COLLER MPF	4	4	4
	12	•302H008180	2H008180	CUT WASHER MPF 5	1	1	1
	13	•302H008200	2H008200	SHAFT MPF FEED SIDE	3	3	3
⊙	14	•302H008220	2H008220	PULLEY 15 MPF FEED	6	6	6
	15	•302H008240	2H008240	SPRING BYPASS	1	1	1
⊙	16	•302H008250	2H008250	PULLEY MPF Z25	2	2	2
⊙	17	•302H008260	2H008260	GEAR MPF Z30	1	1	1
	18	•302H008280	2H008280	SPRING BYPASSFEED 2	2	2	2
	19	•302H008320	2H008320	STAY MPF	1	1	1
	20	•302H008420	2H008420	STAY GUIDE MPF UPPER	1	1	1
	21	•302H024360	2H024360	BUSH 8 EW	4	4	4
⊙	22	•302H094110	2H094110	PARTS ROLLER MPF FEED A SP	1	1	1
⊙	23	•302H094120	2H094120	PARTS ROLLER MPF FEED B SP	1	1	1
⊙	24	•303J131270	3J131270	BELT S2M 230	1	1	1
	25	•5MVL177DN002	2FB06820	RING STOPPER 6	1	1	1
⊙	26	2C927210		SENSOR 248NL1	1	1	1
	27	302H008090	2H008090	PULLEY RAIL MPF FEED	4	4	4
	28	302H046450	2H046450	WIRE MPF PI	1	1	1

	Ref. No.	Part.No.	Alternative.	Description	Quantity 120	230	240
	101	B4A03040		+TP-A SCREW M3X04(TRIVALENT CHROMATIN			
	102	5MBWK62955NN	C2892950	POLY SLIDER /M6.2X9.5X0.5T PLASTC			
	103	BAA63080		+TP TAP-TITE P SCREW M3X08			
	104	5MBSP43006NW++R	B4A03060	TP HEAD SCREW(+) / M3 X 6 DRFREE			

- Parts with "•" are component parts or sub-assemblies of the assembly appearing immediately above them.
- Parts with "⊙" indicate regular maintenance parts.
- Parts with "• •" are component parts or sub-assembly with "•" appearing immediately above them.

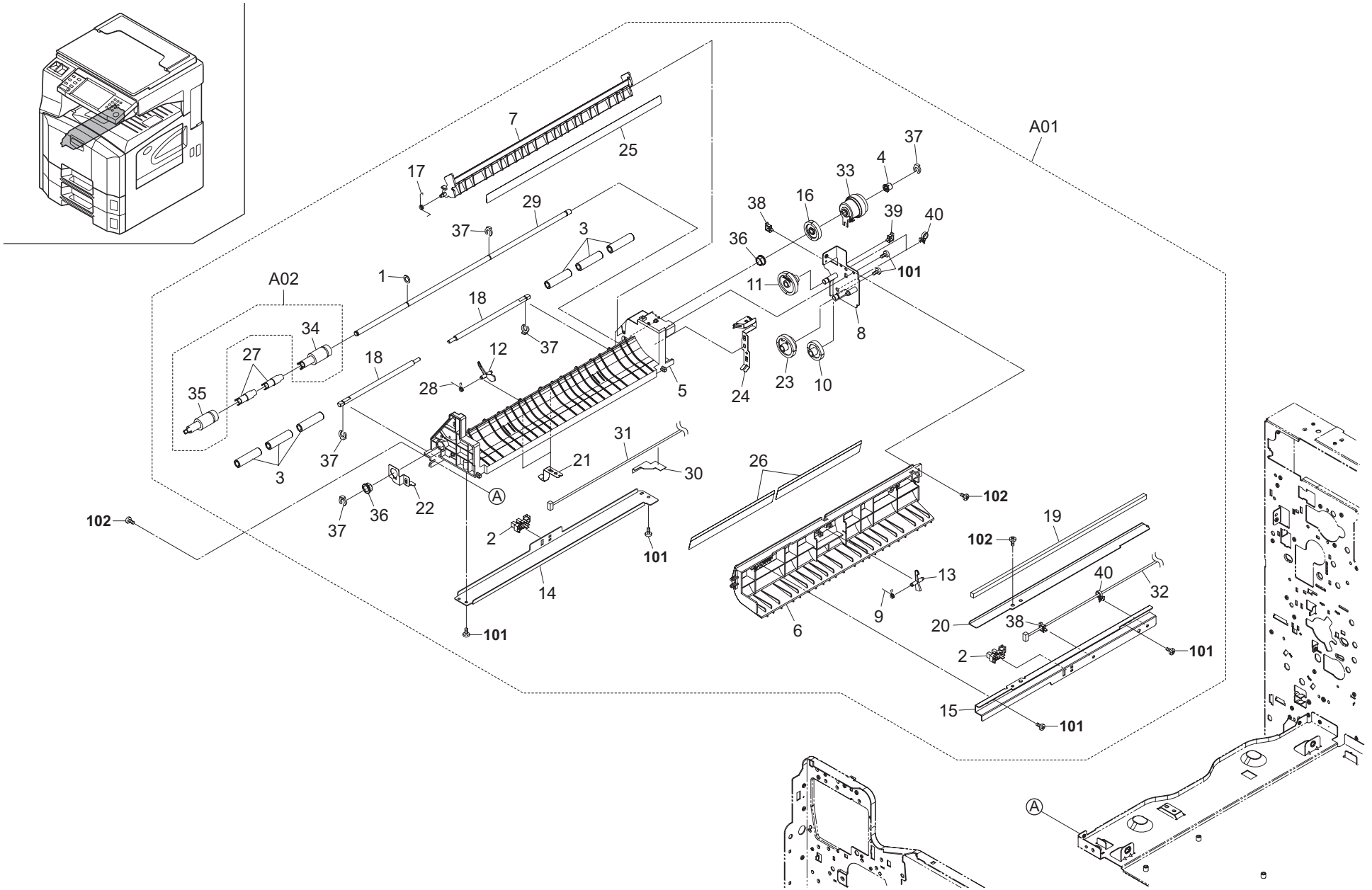
A01
A02
1
2
3
4
5
6
7
8
9
10
11
12
13
14
15
16
17
18
19
20
21
22
23
24
25
26
27
28
29
30
31
32
33
34
35
36
37
38
39
40
101
102
A

FIG. 8 Paper Conveying Section 1

2JB/2JC

	Ref. No.	Part.No.	Alternative.	Description	Quantity 120	230	240
⊙	A01	302H093090	2H093090	PARTS MIDDLE FEEED UNIT	1	1	1
	1	•2BG22990		CUT WASHER 4	1	1	1
⊙	2	•2C927210		SENSOR 248NL1	2	2	2
⊙	3	•2FG06110		PULLEY MIDDLE FEED	6	6	6
	4	•302GR22110	2GR22110	COLLAR TRANS ROLLER	1	1	1
	5	•302H024050	2H024050	BASE MID FEED LOW	1	1	1
	6	•302H024060	2H024060	BASE MID FEED UPPER	1	1	1
	7	•302H024070	2H024070	GUIDE MID FEED	1	1	1
	8	•302H024080	2H024080	PLATE MID FEED	1	1	1
	9	•302H024100	2H024100	SPRING ACTUATOR	1	1	1
⊙	10	•302H024110	2H024110	GEAR FEED Z29S	1	1	1
⊙	11	•302H024120	2H024120	GEAR FEED Z36SZ24S	1	1	1
	12	•302H024130	2H024130	ACTUATOR MID FEED	1	1	1
	13	•302H024140	2H024140	ACTUATOR REGIST	1	1	1
	14	•302H024150	2H024150	PLATE MID FEED PI	1	1	1
	15	•302H024160	2H024160	PLATE REG SW	1	1	1
⊙	16	•302H024200	2H024200	GEAR FEED Z30S CLUTCH	1	1	1
	17	•302H024220	2H024220	SPRING GUIDE MID FEED	1	1	1
	18	•302H024230	2H024230	SHAFT PULLEY FEED	2	2	2
	19	•302H024240	2H024240	SPONGE CLEANER REG	1	1	1
	20	•302H024350	2H024350	MOUNT CLEANER REG	1	1	1
	21	•302H024380	2H024380	PLATE GROUND SHAFT	2	2	2
	22	•302H024390	2H024390	PLATE GROUND ROLLER	1	1	1
⊙	23	•302H024400	2H024400	GEAR FEED Z35SZ23S	1	1	1
	24	•302H024450	2H024450	PLATE GROUND REG SW	1	1	1
	25	•302H024460	2H024460	FILM GUIDE MID FEED	1	1	1
	26	•302H024470	2H024470	FILM GUIDE REG	2	2	2
	27	•302H024590	2H024590	COLLAR JOINT	2	2	2
	28	•302H024600	2H024600	SPRING ACTUATOR LOWER	1	1	1
	29	•302H024620	2H024620	SHAFT PULLEY MID FEED	1	1	1
	30	•302H024650	2H024650	FILM GUIDE HARNESS	1	1	1
	31	•302H046350	2H046350	WIRE MIDDLE FEED	1	1	1
	32	•302H046430	2H046430	WIRE RESIST	1	1	1
⊙	33	•302H094210	2H094210	PARTS CLUTCH FEED SP	1	1	1
⊙	A02	•302H094430	2H094430	PARTS PULLEY MID FEED ASSY SP	1	1	1
	34	••302H024570	2H024570	PULLEY MID FEED A ASSY	1	1	1
	35	••302H024580	2H024580	PULLEY MID FEED B ASSY	1	1	1
	36	•3CY07080		BUSHING 6	2	2	2
	37	•5MVX111DN003	2A806250	RING STOPPER /A-49 FEED A4	5	5	5
	38	•7YZM610007++H01	YZ023340	ACCESS.SADDLE	2	2	2
	39	•7YZM610008++H01	YZ037940	ACCESS.SADDLE	1	1	1
	40	•M21AH010		BAND,RSG-130-V0(KITAGAWA)	3	3	3

	Ref. No.	Part.No.	Alternative.	Description	Quantity 120	230	240
	101	5MBTPB3008PW++R	B1A63080	BIND T.T SCREW(+) / M3 X 8 CRFREE P-T			
	102	5MBTPB3006TW++R	B1A53060	BIND T.T SCREW(+) / M3 X 6 CRFREE S-T			

- Parts with "•" are component parts or sub-assemblies of the assembly appearing immediately above them.
- Parts with "⊙" indicate regular maintenance parts.
- Parts with "• •" are component parts or sub-assembly with "•" appearing immediately above them.

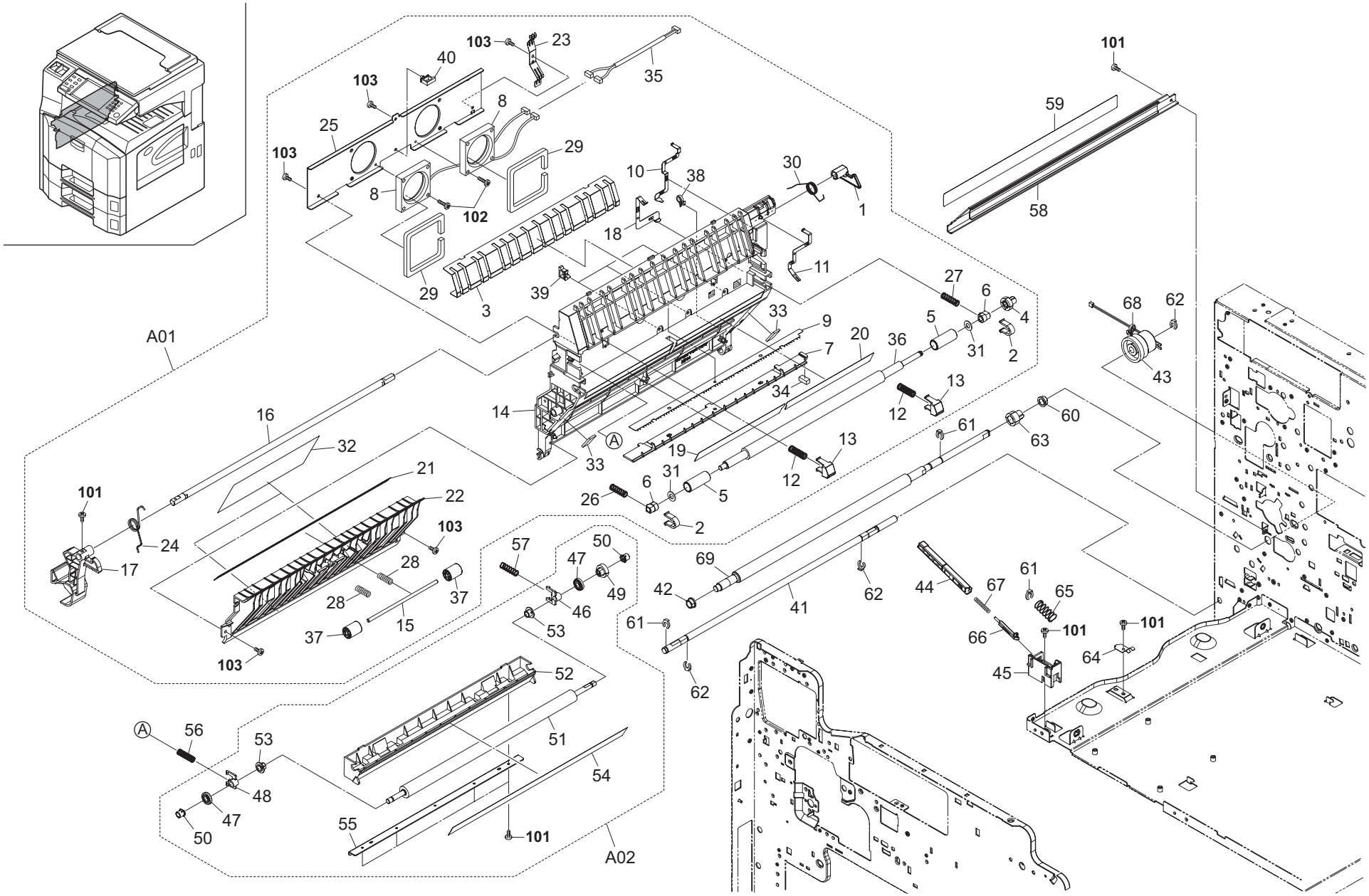
A01
A02
101
102
103
1
2
3
4
5
6
7
8
9
10
11
12
13
14
15
16
17
18
19
20
21
22
23
24
25
26
27
28
29
30
31
32
33
34
35
36
37
38
39
40
41
42
43
44
45
46
47
48
49
50
51
52
53
54
55
56
57
58
59
60
61
62
63
64
65
66
67
68
69

FIG. 9 Paper Conveying Section 2

2JB/2JC

	Ref. No.	Part.No.	Alternative.	Description	Quantity 120	230	240
⊙	A01	302H093180	2H093180	PARTS CONVEYING UNIT	1	1	1
⊙	1	•2C916070		LEVER CONVEYING REAR	1	1	1
⊙	2	•2C916080		STOPPER BUSH REG	2	2	2
	3	•2C916090		GUIDE CONVEYING	1	1	1
⊙	4	•2C916180		GEAR Z15 REGIST	1	1	1
	5	•2C916250		COLLAR REGIST	2	2	2
⊙	6	•2C916260		BUSH REGIST	2	2	2
⊙	7	•2C917070		HOUSING STA ELIMINATION	1	1	1
⊙	8	•2DA27020		FAN COOLING 50-10	2	2	2
	9	•2FT17030		PLATE STA ELIMINATION	1	1	1
	10	•302H022040	2H022040	TERMINAL PLATE TRANS	1	1	1
	11	•302H022050	2H022050	TERMINAL PLATE STA	1	1	1
	12	•302H022090	2H022090	SPRING TRANS GUIDE	2	2	2
	13	•302H022130	2H022130	HOLDER SPRING TRANS	2	2	2
	14	•302H024040	2H024040	FRAME CONVEYING	1	1	1
	15	•302H024090	2H024090	SHAFT MID FEED	1	1	1
	16	•302H024180	2H024180	SHAFT CONVEYING HOOK	1	1	1
	17	•302H024190	2H024190	HOOK CONVEYING F	1	1	1
	18	•302H024210	2H024210	GROUND PLATE REG	1	1	1
	19	•302H024250	2H024250	FILM GUIDE REGIST F	1	1	1
	20	•302H024260	2H024260	FILM GUIDE REGIST R	1	1	1
	21	•302H024270	2H024270	FILM GUIDE DU	1	1	1
	22	•302H024280	2H024280	GUIDE CONVEYING LOW	1	1	1
	23	•302H024290	2H024290	GROUND PLATE FAN	1	1	1
	24	•302H024300	2H024300	SPRING CONVEYING	1	1	1
	25	•302H024310	2H024310	PLATE FAN CONVEYING	1	1	1
	26	•302H024320	2H024320	SPRING REGIST F	1	1	1
	27	•302H024330	2H024330	SPRING REGIST R	1	1	1
	28	•302H024340	2H024340	SPRING CONVEYING FEED	2	2	2
	29	•302H024610	2H024610	SPONGE CONVEYING FAN	2	2	2
	30	•302H024630	2H024630	SPRING CONVEYING R	1	1	1
	31	•302H024680	2H024680	CUT WASHER 8	2	2	2
	32	•302H024690	2H024690	FILM CONVEYING LOW	2	2	2
	33	•302H024700	2H024700	SPONGE MID FEED GUIDE	2	2	2
	34	•302H024710	2H024710	CUSHION TRANS	1	1	1
	35	•302H046470	2H046470	WIRE CONVEYING FAN	1	1	1
⊙	36	•302H094140	2H094140	PARTS ROLLER REGIST LEFT SP	1	1	1
⊙	37	•3HY07120		PULLEY 15 DUPLEX	2	2	2
	38	•7YZM420003++H01	YZ052580	ACCESS.BAND	1	1	1
	39	•7YZM610007++H01	YZ023340	ACCESS.SADDLE	3	3	3
	40	•7YZM610009++H01	YZ042980	ACCESS.SADDLE	1	1	1
	41	302H024170	2H024170	SHAFT CONVEYING	1	1	1
	42	302H024360	2H024360	BUSH 8 EW	1	1	1
⊙	43	302H094220	2H094220	PARTS CLUTCH REGISTRATION SP	1	1	1
	44	302H024420	2H024420	SHAFT LOCK MPF	1	1	1
	45	302H024430	2H024430	MOUNT LOCK SHAFT	1	1	1
⊙	A02	302H093050	2H093050	PARTS TR-670	1	1	1
⊙	46	•2C917100		BUSH TRANSFER	1	1	1
⊙	47	•2C917110		COLLAR TRANS	2	2	2
	48	•2C917180		BUSH TRANS ROLL F	1	1	1
⊙	49	•2FT17020		GEAR TRANSFER	1	1	1
	50	•302GR22110	2GR22110	COLLAR TRANS ROLLER	2	2	2
⊙	51	•302H022010	2H022010	ROLLER TRANSFER	1	1	1
	52	•302H022020	2H022020	GUIDE TRANS LEFT	1	1	1
	53	•302H022100	2H022100	BUSH TRANS GUIDE	2	2	2
	54	•302H022110	2H022110	SHEET TRANS GUIDE LEFT	1	1	1
⊙	55	•302H022140	2H022140	REINFORCEMENT TRANS	1	1	1
	56	302H022070	2H022070	SPRING TRANS ROLL F	1	1	1
	57	302H022080	2H022080	SPRING TRANS ROLL R	1	1	1
	58	302H022030	2H022030	GUIDE TRANS RIGHT	1	1	1
	59	302H022120	2H022120	SHEET TRANS GUIDE RIGHT	1	1	1
⊙	60	2BC06510		BUSHING 8	1	1	1
	61	2BC06910		STOPPER 6	3	3	3
	62	2BC06980		STOPPER 5	3	3	3
⊙	63	2C907130		GEAR Z15 REGIST	1	1	1
	64	302H024440	2H024440	PLATE GROUND MID FEED	1	1	1
	65	302H024530	2H024530	SPRING LOCK SHAFT	1	1	1
	66	302H024540	2H024540	PIN LOCK MPF	1	1	1
	67	302H024550	2H024550	SPRING LOCK PIN	1	1	1
	68	M21AH010		BAND,RSG-130-V0(KITAGAWA)	1	1	1
⊙	69	302H024020	2H024020	ROLLER REGIST RIGHT	1	1	1
	101	5MBTPB3006TW++R	B1A53060	BIND T.T SCREW(+) / M3 X 6 CRFREE S-T			
	102	5MBTPB3010TW++R	B1A53100	BIND T.T SCREW(+) / M3 X 10 CRFREE S-T			
	103	5MBTPB3008PW++R	B1A63080	BIND T.T SCREW(+) / M3 X 8 CRFREE P-T			

- Parts with "•" are component parts or sub-assemblies of the assembly appearing immediately above them.
- Parts with "⊙" indicate regular maintenance parts.
- Parts with "• •" are component parts or sub-assembly with "•" appearing immediately above them.

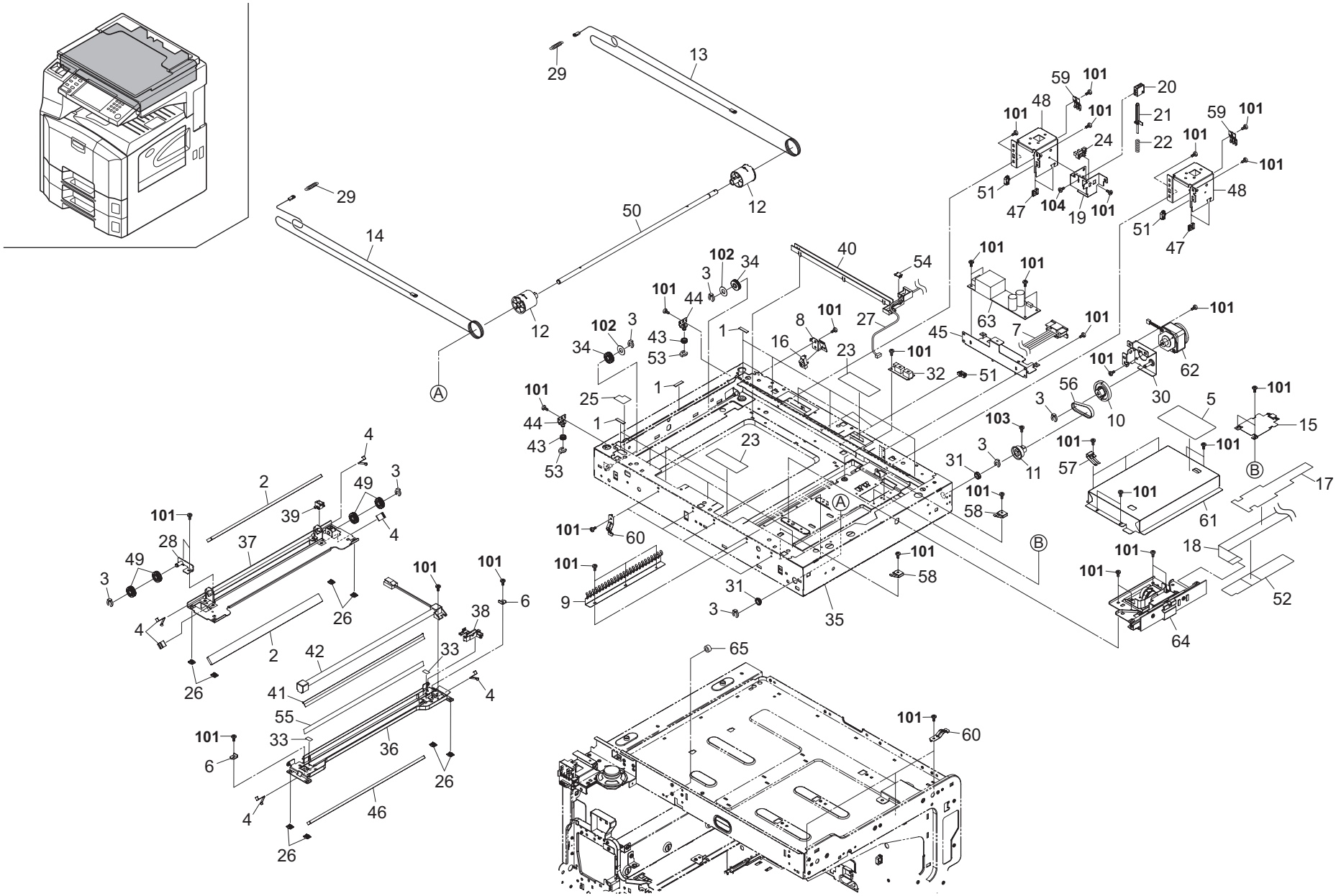
29
13
29
14
50
12
12
A
102
34
3
101
44
43
53
102
3
34
1
16
8
101
23
27
40
54
101
101
63
7
45
101
101
32
51
101
62
101
30
101
25
1
1
44
43
53
23
56
3
10
5
101
15
103
3
11
31
101
57
101
101
B
17
101
58
61
101
60
101
9
101
58
101
31
3
35
B
101
18
101
52
64
4
2
49
3
39
4
101
28
37
49
3
4
26
101
101
6
38
2
42
33
26
41
4
55
101
33
36
6
26
4
46
26
65
101
60

FIG. 10 Scanner Section 1

	Ref. No.	Part.No.	Alternative.	Description	Quantity 120	230	240
	1	29812291		CUSHION,CONTACT GLASS	9	9	9
⊙	2	2AV12160		MIRROR B	2	2	2
	3	2BC06980		STOPPER 5	7	7	7
	4	2BC12190		SPRING,MIRROR HOLDER	6	6	6
⊙	5	2C905160		LABEL GLASS CAUTION	1	1	1
	6	2C912150		RETAINER WIRE	2	2	2
	7	302H046330	2H046330	WIRE DP	1	1	1
	8	2C912220		MOUNT PI	1	1	1
	9	302H017360	2H017360	GROUND ISU COVER	1	1	1
⊙	10	2C912310		GEAR Z18/39	1	1	1
⊙	11	2C912320		GEAR Z36	1	1	1
⊙	12	2C912340		DRUM PULLEY	2	2	2
	13	2C912350		WIRE SCANNER BLACK	1	1	1
	14	2C912360		WIRE SCANNER GRAY	1	1	1
	15	302H017370	2H017370	GROUND FFC	1	1	1
⊙	16	5FNXGP1A73A++02	2DC27180	PT.SENSOR GP1A73AJ00/ BK	1	1	1
	17	302H017330	2H017330	HOLDER CCD WIRE	1	1	1
	18	302H046220	2H046220	FFC CCD	1	1	1
	19	2C912610		MOUNT RELEASE SWITCH	1	1	1
	20	2C912620		GUIDE RELEASE SWITCH	1	1	1
	21	2C912640		SHAFT RELEASE SWITCH	1	1	1
	22	2C912650		SPRING RELEASE SWITCH	1	1	1
	23	2C912670		SHIELD SCANNER FRAME	4	4	4
⊙	24	2C927210		SENSOR 248NL1	1	1	1
	25	2C912710		SHIELD SCANNER FRAME B	1	1	1
	26	2DC12230		SLIDER SCANNER	8	8	8
	27	302H046170	2H046170	WIRE SCANNER PI	1	1	1
	28	302C912131	2C912131	ADJUSTING PLATE B	1	1	1
	29	302C912291	2C912291	SPRING SCANNER TENSION	2	2	2
	30	302C912302	2C912302	MOTOR PLATE SCANNER	1	1	1
	31	302FB11160	2FB11160	BEARING MF128ZZ	2	2	2
⊙	32	302H044110	2H044110	SENSOR ORIGINAL	1	1	1
	33	302GR17400	2GR17400	FILM LAMP	2	2	2
	34	302GR17820	2GR17820	PULLEY SCANNER	2	2	2
	35	302H000010	2H000010	SCANNER FRAME ASSY	1	1	1
	36	302H017050	2H017050	MIRROR FRAME A	1	1	1
	37	302H017060	2H017060	MIRROR FRAME B	1	1	1
	38	302H017070	2H017070	GUIDE LAMP WIRE A	1	1	1
	39	302H017080	2H017080	GUIDE LAMP WIRE B	1	1	1
	40	302H017090	2H017090	GUIDE LAMP WIRE C	1	1	1
	41	302H017100	2H017100	REFLECTOR SCANNER	1	1	1
⊙	42	302H094130	2H094130	PARTS LAMP SCANNER W SP	1	1	1
	43	302H017120	2H017120	PULLEY LEFT FRAME	2	2	2
	44	302H017130	2H017130	MOUNT PULLEY	2	2	2
	45	302H017140	2H017140	MOUNT INVERTER	1	1	1
	46	302H017150	2H017150	MIRROR A	1	1	1
	47	M2104390		EDGING,EDS-0607L(KITAGAWA)	4	4	4
	48	302H017170	2H017170	MOUNT DF	2	2	2
	49	302H017180	2H017180	PULLEY SCANNER	4	4	4
	50	302H017190	2H017190	SHAFT DRIVE	1	1	1
	51	7YZM610008++H01	YZ037940	ACCESS.SADDLE	4	4	4
	52	302H017210	2H017210	GUIDE CCD WIRE	1	1	1
	53	5MVX111DN003	2A806250	RING STOPPER /A-49 FEED A4	2	2	2
	54	302H017230	2H017230	LID GUIDE WIRE C	1	1	1
	55	302H017250	2H017250	TAPE REFLECTOR	1	1	1
⊙	56	302H017260	2H017260	BELT SCANNER	1	1	1
	57	302H017290	2H017290	SPRING SCANNER A	3	3	3
	58	302H017300	2H017300	SPRING SCANNER B	2	2	2
	59	302H017310	2H017310	GROUND SCANNER REAR	2	2	2
	60	302H017320	2H017320	GROUND SCANNER FRONT	8	8	8
	61	302H017600	2H017600	COVER ISU	1	1	1
⊙	62	302H094440	2H094440	PARTS MOTOR SCANNER SP	1	1	1
⊙	63	302H094280	2H094280	PARTS,LAMP INVERTER,SP	1	1	1
⊙	64	302H093070	2H093070	PARTS ISU	1	1	1
	65	302H002380	2H002380	SHIELD SCREW	1	1	1
	101	5MBTPB3006TW++R	B1A53060	BIND T.T SCREW(+) / M3 X 6 CRFREE S-T			
	102	C2895950		SHIM 6.2-1.0T			
	103	B0A23080		+ROUND HEAD SCREW WITH SW.W M3X8(TRI			
	104	5MBTPB3008PW++R	B1A63080	BIND T.T SCREW(+) / M3 X 8 CRFREE P-T			

- Parts with "•" are component parts or sub-assemblies of the assembly appearing immediately above them.
- Parts with "⊙" indicate regular maintenance parts.
- Parts with "• •" are component parts or sub-assembly with "•" appearing immediately above them.

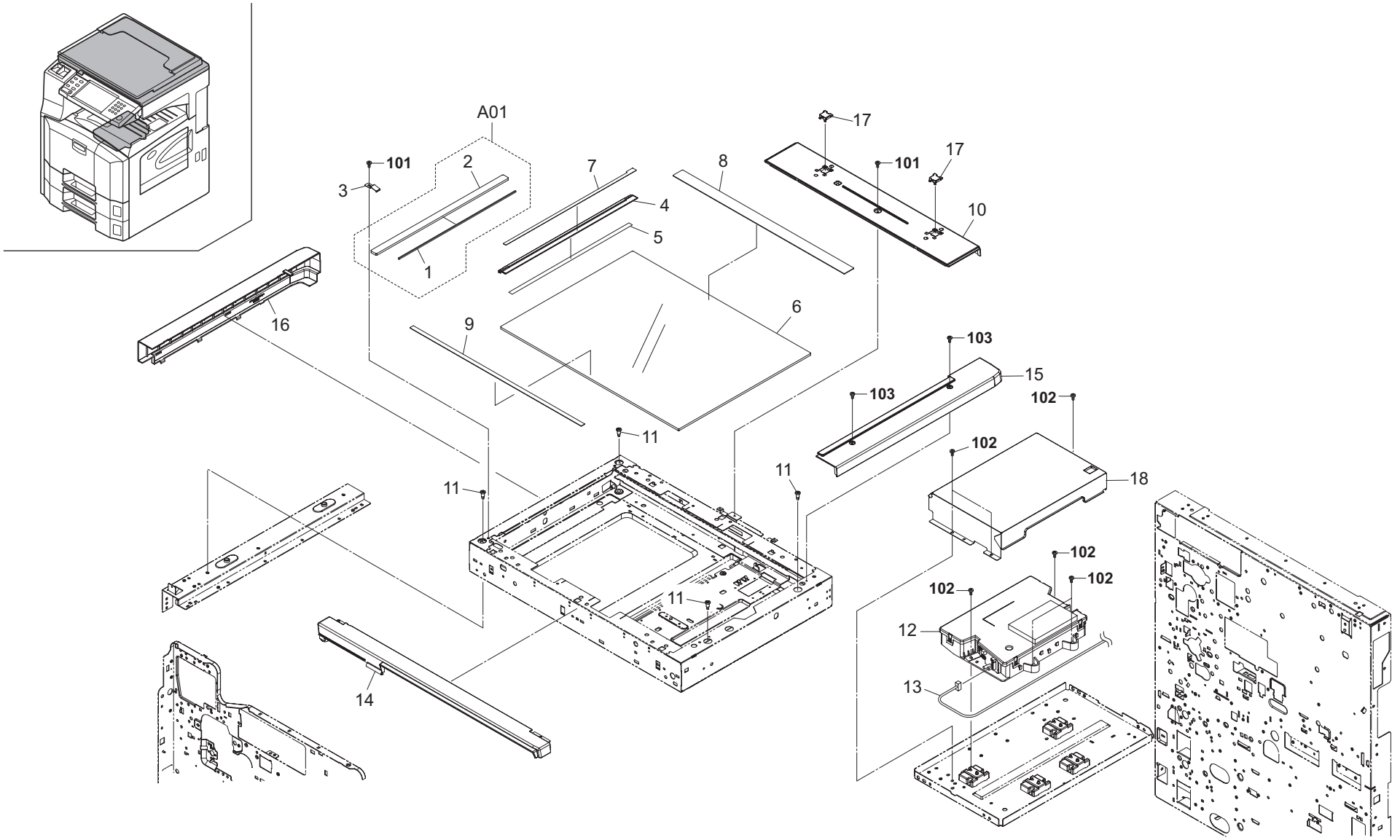
A01
101
2
3
1
7
4
5
8
17
101
17
10
16
9
6
103
15
103
102
11
102
18
11
11
102
102
102
12
11
13
14

FIG. 11 Scanner Section 2

	Ref. No.	Part.No.	Alternative.	Description	Quantity 120	230	240
⊙	A01	302H093300	2H093300	PARTS CONTACT GLASS DP	1	1	1
⊙	1	•2C912700		SPONGE ORIGINAL SIZE	1	1	1
⊙	2	•302H017220	2H017220	CONTACT GLASS DP	1	1	1
	3	2C912420		HOLDER GLASS DF	1	1	1
⊙	4	302H017160	2H017160	LEFT SIZE INDICATOR	1	1	1
	5	302H017200	2H017200	PLATE SHADING	1	1	1
⊙	6	2C912250		CONTACT GLASS	1	1	1
⊙	7	2C912440		LABEL SIZE (METRIC)		1	1
⊙	7	2C912450		LABEL SIZE (INCH)	1		
⊙	8	302H017340	2H017340	REAR SIZE INDICATOR (M)		1	1
⊙	8	302H017350	2H017350	REAR SIZE INDICATOR (I)	1		
⊙	9	2C912600		FRONT SIZE INDICATOR	1	1	1
⊙	10	302H004200	2H004200	COVER ISU REAR	1	1	1
	11	302GR17180	2GR17180	PIN SCANNER RETAINING	4	4	4
⊙	12	302H093060	2H093060	PARTS LK-670	1	1	1
	13	302H046530	2H046530	WIRE LSU JUNCTION	1	1	1
⊙	14	302H004170	2H004170	COVER ISU FRONT	1	1	1
⊙	15	302H004190	2H004190	COVER ISU RIGHT	1	1	1
⊙	16	302H004180	2H004180	COVER ISU LEFT	1	1	1
⊙	17	302H004550	2H004550	CAP MOUNT DP	2	2	2
	18	302H019020	2H019020	COVER LSU	1	1	1

	Ref. No.	Part.No.	Alternative.	Description	Quantity 120	230	240
	101	B1A64120		+BIND TAP-TITE P SCREW M4X12			
	102	5MBTPB3006TW++R	B1A53060	BIND T.T SCREW(+) / M3 X 6 CRFREE S-T			
	103	7BB102308H	BB046210	TP TAP-TITE SCREW M3X8			

- Parts with "•" are component parts or sub-assemblies of the assembly appearing immediately above them.
- Parts with "⊙" indicate regular maintenance parts.
- Parts with "• •" are component parts or sub-assembly with "•" appearing immediately above them.

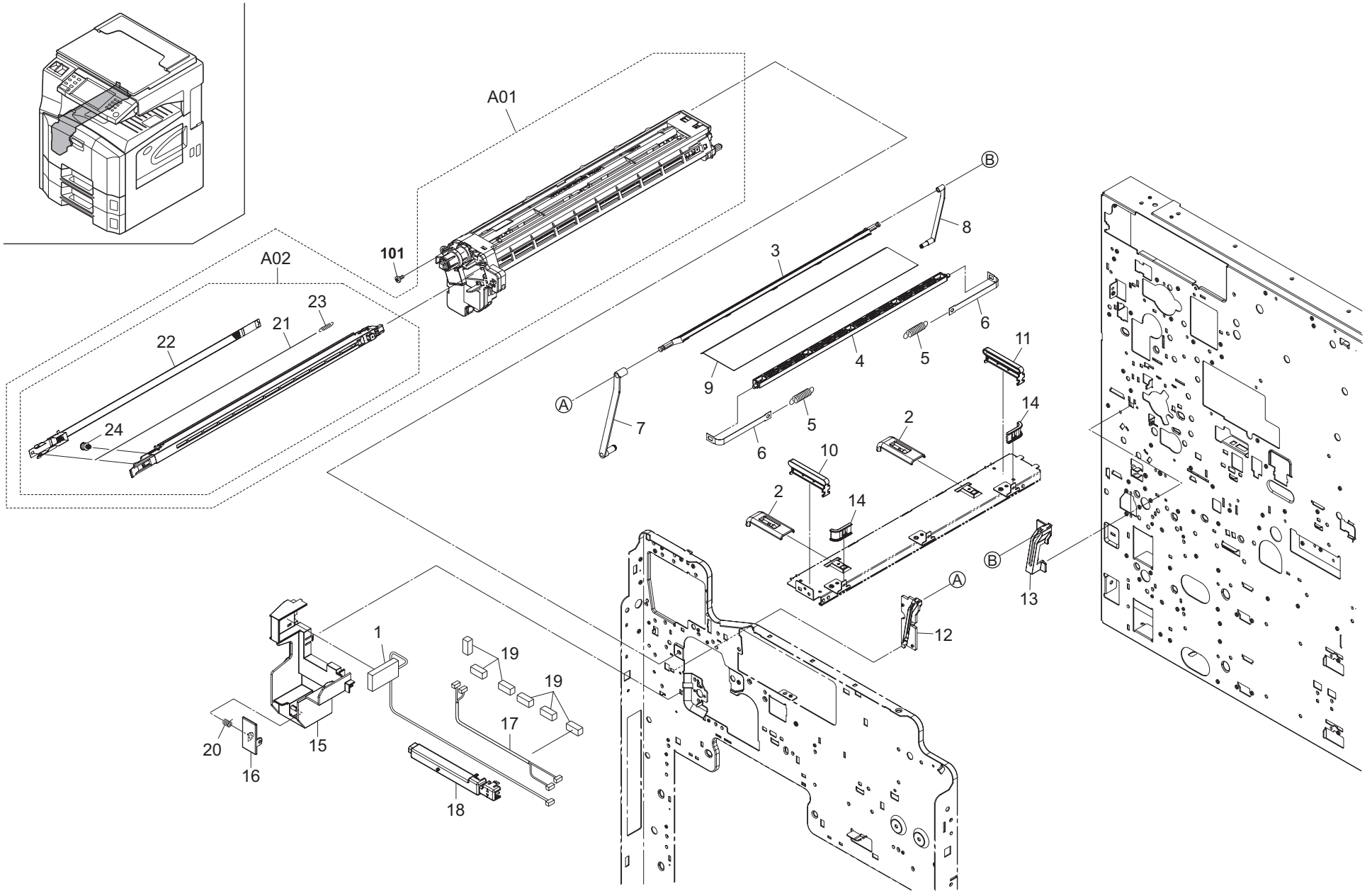
A01
A02
101
1
2
3
4
5
6
7
8
9
10
11
12
13
14
15
16
17
18
19
20
21
22
23
24
Ⓐ
Ⓑ

FIG. 12 Image Formation Section

	Ref. No.	Part.No.	Alternative.	Description	Quantity 120	230	240
⊙	1	2C901170		DISPOSAL SENSOR ASSY	1	1	1
	2	302H012010	2H012010	GUIDE DRUM SHUTTER	2	2	2
	3	302H012020	2H012020	LEFT HOLDER SHEET	1	1	1
	4	302H012030	2H012030	RIGHT HOLDER SHEET	1	1	1
	5	302H012040	2H012040	SPRING DRUM SHUTTER	2	2	2
	6	302H012050	2H012050	STRAP DRUM SHUTTER	2	2	2
	7	302H012060	2H012060	FRONT ARM DRUM SHUTTER	1	1	1
	8	302H012070	2H012070	REAR ARM DRUM SHUTTER	1	1	1
	9	302H012080	2H012080	SHEET DRUM SHUTTER	1	1	1
	10	302H012090	2H012090	FRONT RAIL DRUM SHUTTER	1	1	1
	11	302H012100	2H012100	REAR RAIL DRUM SHUTTER	1	1	1
	12	302H012110	2H012110	FRONT RAIL LINK ARM	1	1	1
	13	302H012120	2H012120	REAR RAIL LINK ARM	1	1	1
	14	302H012130	2H012130	GUIDE STRAP	2	2	2
	15	302H012170	2H012170	HOLDER SENSOR	1	1	1
	16	302H012180	2H012180	DETECTION PLATE	1	1	1
	17	302H046570	2H046570	WIRE FRONT JUNCTION	1	1	1
	18	302H004710	2H004710	GUIDE WIRE FRONT	1	1	1
	19	302H012330	2H012330	SEAL WIRE A	6	6	6
	20	2C918360		SPRING DETECTION	1	1	1
⊙	A01	302H093010	2H093010	PARTS DK-670	1	1	1
⊙	A02	•302H093310	2H093310	PARTS MC-670	1	1	1
⊙	21	••2A068240		WIRE,MAIN CHARGER	1	1	1
	22	••2FT10040		GRID	1	1	1
	23	••5MMW141LX002	2BZ02300	SPRING WIRE /49585J0058 A4	1	1	1
	24	••5MVT263NN001	33910230	PIN CHARGER /A-49 CHARGER A4	1	1	1

	Ref. No.	Part.No.	Alternative.	Description	Quantity 120	230	240
	101	BAB54100		+TP TAP-TITE S SCREW M4X10			

- Parts with "•" are component parts or sub-assemblies of the assembly appearing immediately above them.
- Parts with "⊙" indicate regular maintenance parts.
- Parts with "• •" are component parts or sub-assembly with "•" appearing immediately above them.

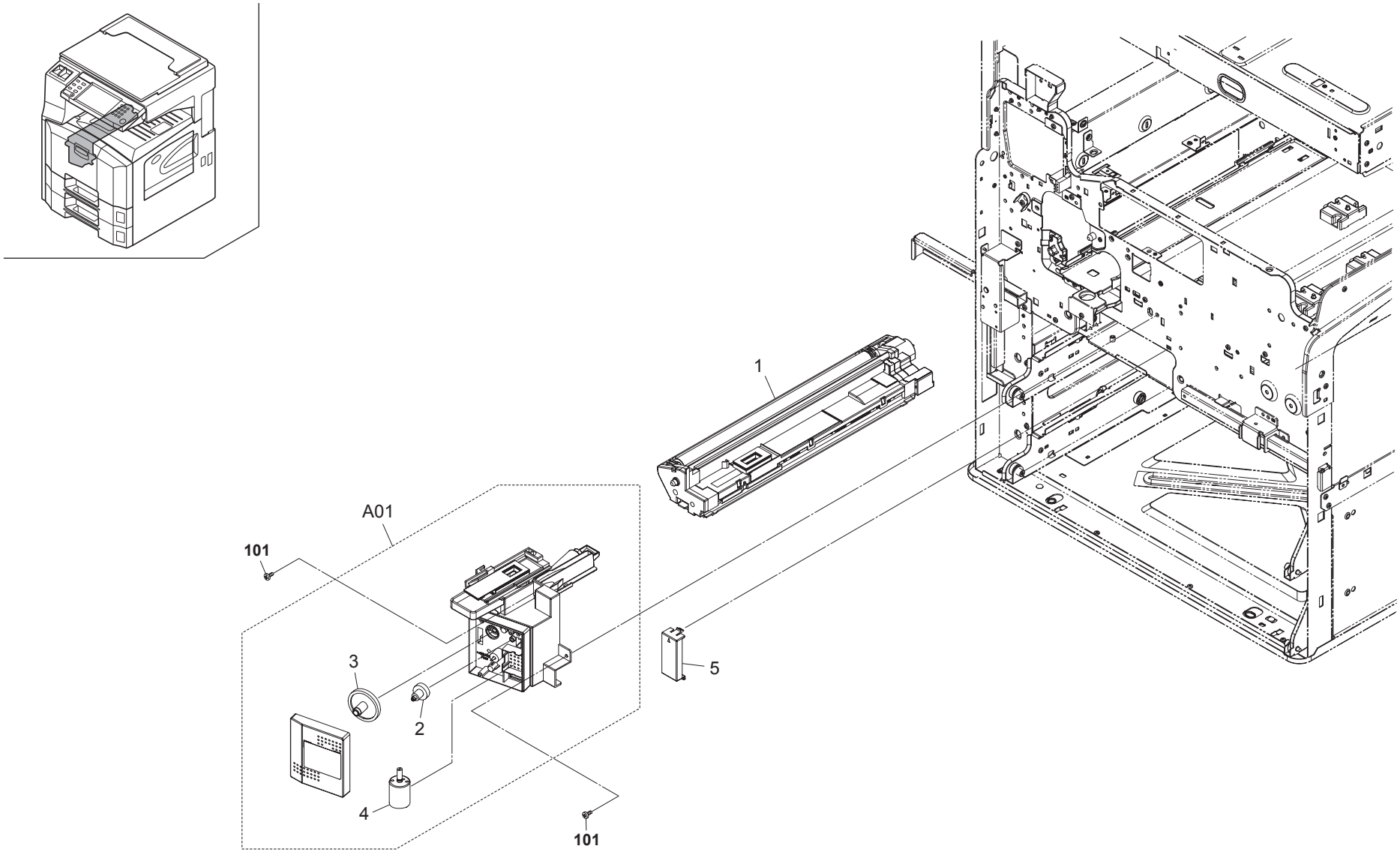
1
A01
101
3
2
4
5
101

FIG. 13 Developing Section

	Ref. No.	Part.No.	Alternative.	Description	Quantity 120	230	240
⊙	1	302FT93052	2FT93052	PARTS,DV-420,SP	1	1	1
⊙	A01	302H093210	2H093210	PARTS MIDDLE HOPPER UNIT	1	1	1
⊙	2	•302H014070	2H014070	GEAR HOPPER MOTOR	1	1	1
⊙	3	•302H014080	2H014080	GEAR Z50S HOPPER	1	1	1
⊙	4	•302H094320	2H094320	PARTS DC MOTOR SP	1	1	1
	5	302H014190	2H014190	COVER WIRE HOPPER	1	1	1

	Ref. No.	Part.No.	Alternative.	Description	Quantity 120	230	240
	101	7BB102308H	BB046210	TP TAP-TITE SCREW M3X8			

- Parts with "•" are component parts or sub-assemblies of the assembly appearing immediately above them.
- Parts with "⊙" indicate regular maintenance parts.
- Parts with "• •" are component parts or sub-assembly with "•" appearing immediately above them.

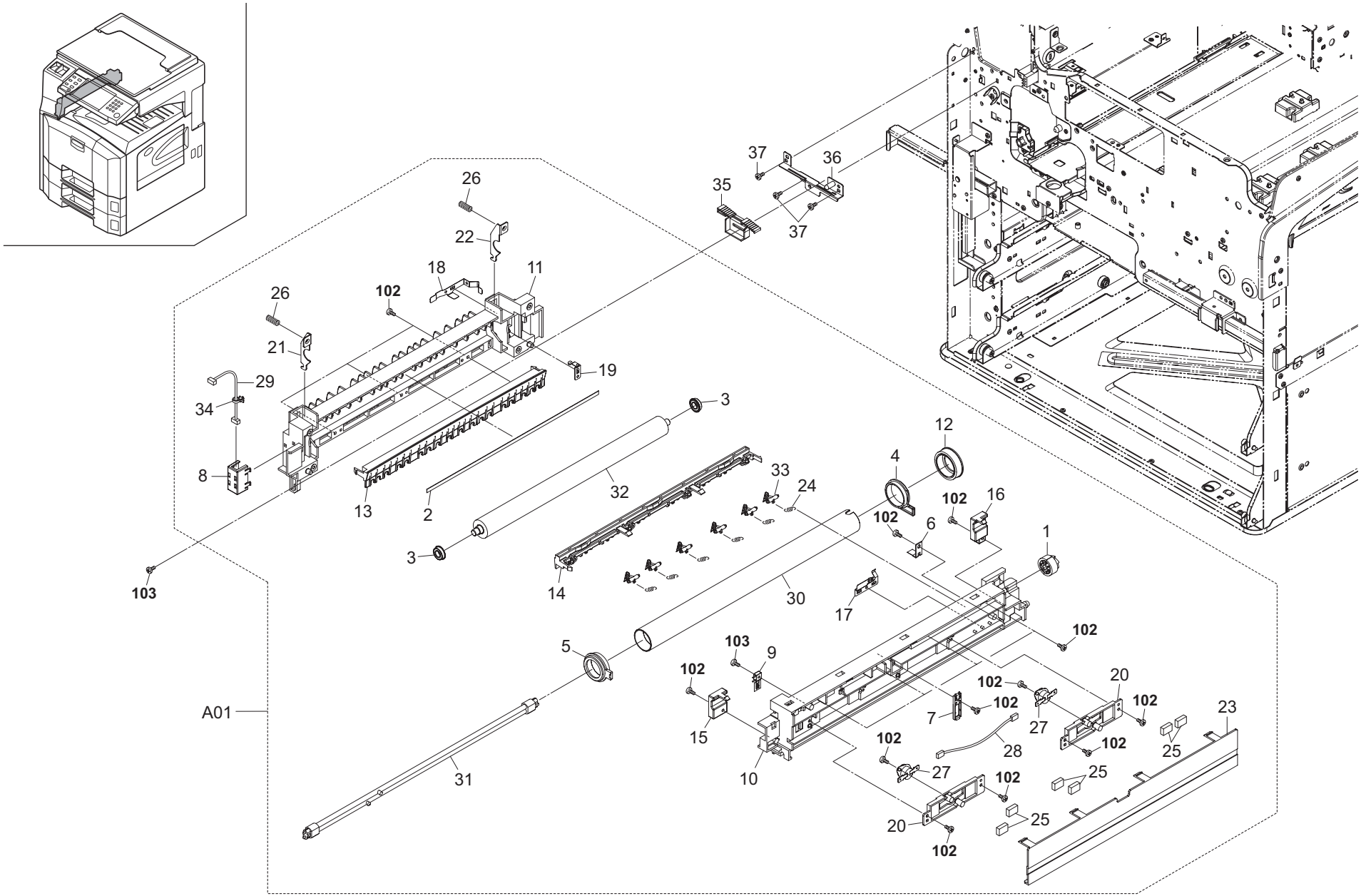
A01
1
2
3
4
5
6
7
8
9
10
11
12
13
14
15
16
17
18
19
20
21
22
23
24
25
26
27
28
29
30
31
32
33
34
35
36
37
102
103

FIG. 14 Fuser Section

	Ref. No.	Part.No.	Alternative.	Description	Quantity 120	230	240
⊙	A01	302H093040	2H093040	PARTS FK-670(E)		1	1
⊙	A01	302H093030	2H093030	PARTS FK-670(U)	1		
⊙	1	•2C920180		GEAR FUSER Z28	1	1	1
	2	•2C920320		SEAL DISCHAGER	1	1	1
⊙	3	•2C920330		BEARING PRESSURE	2	2	2
⊙	4	•302F725070	2F725070	BUSH HEAT R	1	1	1
⊙	5	•302F725080	2F725080	BUSH HEAT L	1	1	1
⊙	6	•302F725430	2F725430	STATIC ELIMINATOR HEAT ROLLER	1	1	1
⊙	7	•302F925430	2F925430	THERMISTOR ASSY	1	1	1
	8	•302FT20101	2FT20101	COVER PCB FIXING	1	1	1
⊙	9	•302GJ25560	2GJ25560	THERMISTOR FUSER	1	1	1
	10	•302H025010	2H025010	RIGHT FRAME FUSER	1	1	1
	11	•302H025020	2H025020	LEFT FRAME FUSER	1	1	1
⊙	12	•302H025030	2H025030	GEAR FUSER Z46	1	1	1
	13	•302H025040	2H025040	FRONT GUIDE FUSER	1	1	1
	14	•302H025050	2H025050	REAR GUIDE FUSER	1	1	1
	15	•302H025060	2H025060	COVER HEATER F	1	1	1
	16	•302H025070	2H025070	COVER HEATER R	1	1	1
	17	•302H025090	2H025090	GROUND PLATE HEAT R	1	1	1
	18	•302H025150	2H025150	GROUND PLATE PRESS A	1	1	1
	19	•302H025160	2H025160	GROUND PLATE PRESS B	1	1	1
	20	•302H025180	2H025180	PLATE HOLDER	2	2	2
	21	•302H025190	2H025190	FRONT PRESSING PLATE	1	1	1
	22	•302H025200	2H025200	REAR PRESSING PLATE	1	1	1
	23	•302H025250	2H025250	COVER FUSER UNIT	1	1	1
⊙	24	•302H025290	2H025290	SPRING FUSER	6	6	6
	25	•302H025300	2H025300	SPONGE FUSER TL	6	6	6
	26	•302H025310	2H025310	SPRING PRESSURE	2	2	2
⊙	27	•302H025320	2H025320	THERMOSTAT 190 FUSER	2	2	2
	28	•302H046420	2H046420	WIRE FUSER PRIMARY	1	1	1
	29	•302H046460	2H046460	WIRE FUSER PWB	1	1	1
⊙	30	•302H094160	2H094160	PARTS ROLLER HEAT SP	1	1	1
⊙	31	•302H094180	2H094180	PARTS HEATER FUSER 120 SP	1		
⊙	31	•302H094190	2H094190	PARTS HEATER FUSER 230 SP		1	1
⊙	32	•302H094450	2H094450	PARTS ROLLER PRESS SP	1	1	1
⊙	33	•5MVX222XN002	2A820530	SEPARATOR /40301P0028 A4	6	6	6
	34	•7YZM420003++H01	YZ052580	ACCESS.BAND	1	1	1
	35	302H025210	2H025210	SPACER FUSER	1	1	1
	36	302H025220	2H025220	PLATE FUSER SPACER	1	1	1
	37	303KZ02180	3KZ02180	PIN SCREW BIND 3X6S	3	3	3

Ref. No.	Part.No.	Alternative.	Description	Quantity 120	230	240
101	5MBTPB3006TW++R	B1A53060	BIND T.T SCREW(+) / M3 X 6 CRFREE S-T			
102	5MBTPB3008PW++R	B1A63080	BIND T.T SCREW(+) / M3 X 8 CRFREE P-T			
103	5MBTPB3010PW++R	B1B63100	BIND T.T SCREW(+) / M3 X 10 CRFREE P-T			

- Parts with "•" are component parts or sub-assemblies of the assembly appearing immediately above them.
- Parts with "⊙" indicate regular maintenance parts.
- Parts with "• •" are component parts or sub-assembly with "•" appearing immediately above them.

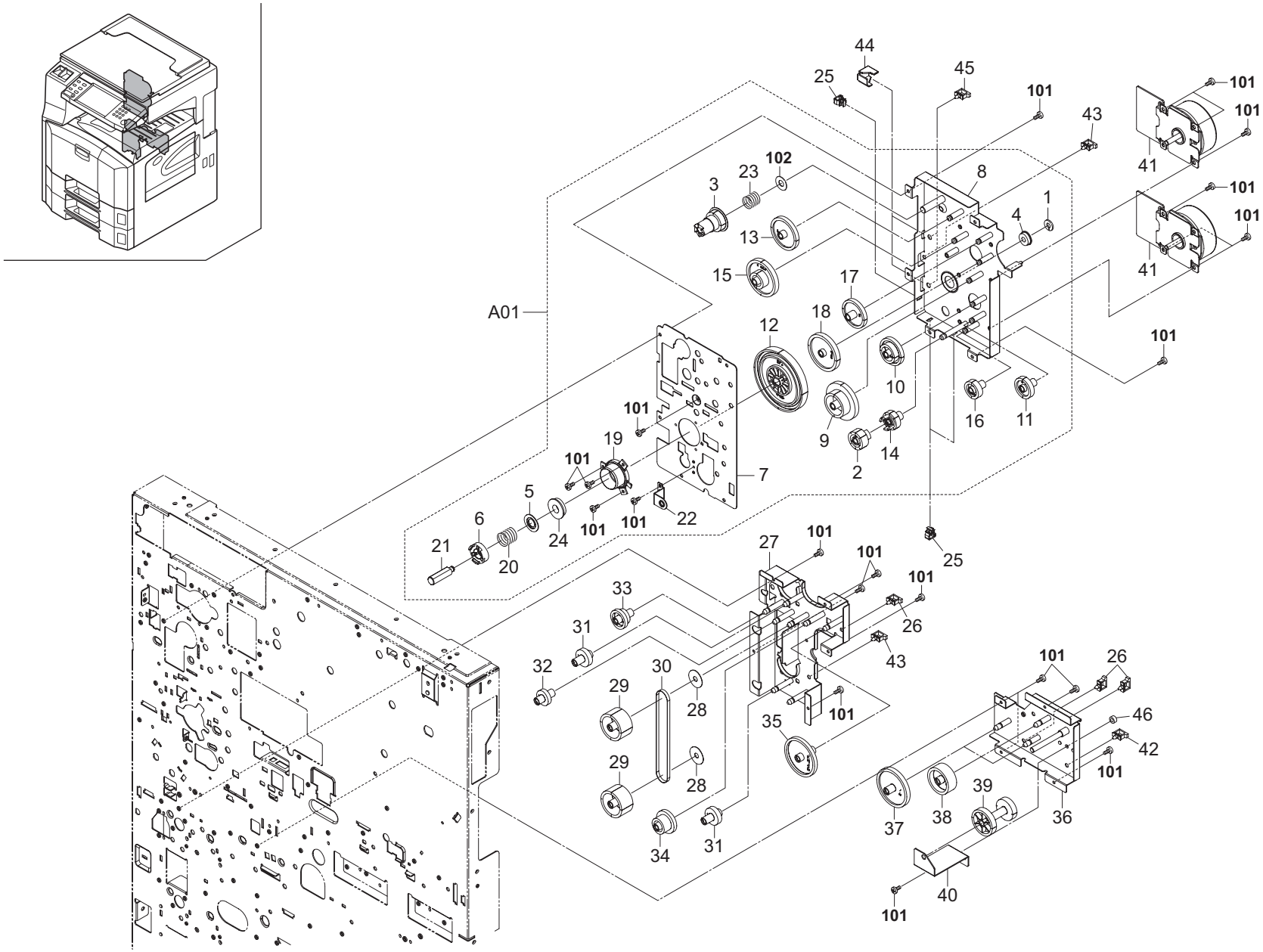
A01
101
102

FIG. 15 Drive Section 1

2JB/2JC

	Ref. No.	Part.No.	Alternative.	Description	Quantity 120	230	240
⊙	A01	302H093150	2H093150	PARTS DR-670	1	1	1
	1	•2C904550		CUT WASHER 5	1	1	1
⊙	2	•2C922150		GEAR 26 DEV	1	1	1
⊙	3	•2C922230		GEAR 29 FIX JOINT	1	1	1
⊙	4	•2FT22160		BEARING 6-15-17	1	1	1
	5	•302FT22200	2FT22200	SPACER COUPLING	1	1	1
	6	•302FT22250	2FT22250	COUPLING DRUM 2	1	1	1
	7	•302H031010	2H031010	BASE MAIN DRIVE	1	1	1
	8	•302H031020	2H031020	MOUNT DRIVE DRUM	1	1	1
⊙	9	•302H031090	2H031090	GEAR Z90H-Z36H	1	1	1
⊙	10	•302H031110	2H031110	GEAR Z40H-Z27H	1	1	1
⊙	11	•302H031130	2H031130	GEAR Z30H	1	1	1
⊙	12	•302H031140	2H031140	GEAR Z152H	1	1	1
⊙	13	•302H031160	2H031160	GEAR Z50S	1	1	1
⊙	14	•302H031170	2H031170	GEAR Z25H DEV	1	1	1
⊙	15	•302H031180	2H031180	GEAR Z89H-Z24S	1	1	1
⊙	16	•302H031190	2H031190	GEAR Z25H	1	1	1
⊙	17	•302H031230	2H031230	GEAR Z43S	1	1	1
⊙	18	•302H031240	2H031240	GEAR Z55H-Z30S	1	1	1
	19	•302H031320	2H031320	POSITIONING BUSH DRUM	1	1	1
	20	•302H031330	2H031330	SPRING DRUM COUPLING	1	1	1
	21	•302H031340	2H031340	SHAFT COUPLING	1	1	1
	22	•302H031370	2H031370	GUIDE SHAFT DEV	1	1	1
	23	•302H031410	2H031410	SPRING FUSER JOINT	1	1	1
⊙	24	•G3169000		BEARING 6900ZZNR	1	1	1
	25	7YZM610009++H01	YZ042980	ACCESS.SADDLE	3	3	3
	26	7YZM610005++H01	YZ012220	ACCESS SADDLE	3	3	3
	27	302H006130	2H006130	PLATE FEED DRIVE	1	1	1
⊙	28	2BL22580		COLLAR BELT	2	2	2
⊙	29	302H006320	2H006320	GEAR Z41S-P30 FEED	2	2	2
⊙	30	2BL22350		BELT DRIVE FEED	1	1	1
⊙	31	302H006230	2H006230	GEAR Z25S FEED CLUTCH	2	2	2
⊙	32	302H006150	2H006150	GEAR Z22S FEED	1	1	1
⊙	33	302H006160	2H006160	GEAR Z21S-Z28S FEED	1	1	1
⊙	34	302H006170	2H006170	GEAR Z34S-Z23S FEED	1	1	1
⊙	35	302H006310	2H006310	GEAR Z60S-Z35S FEED	1	1	1
	36	302H006260	2H006260	PLATE MPF DRIVE A	1	1	1
⊙	37	302H006250	2H006250	GEAR Z60S FEED	2	2	2
⊙	38	302H006270	2H006270	GEAR Z41S FEED	1	1	1
⊙	39	2BL22550		GEAR Z40S-Z32S	1	1	1
	40	302H006280	2H006280	PLATE MPF DRIVE B	1	1	1
⊙	41	302H094200	2H094200	PARTS MOTOR MAIN SP	2	2	2
	42	7YZM610001++H01	YZ010230	ACCESS SADDLE	1	1	1
	43	7YZM610003++H01	YZ010250	ACCESS SADDLE	2	2	2
	44	302H031360	2H031360	HOLDER MOTOR	2	2	2
	45	M2109150		WIRE SADDLE,HL-28	2	2	2
	46	302H002380	2H002380	SHIELD SCREW	1	1	1

	Ref. No.	Part.No.	Alternative.	Description	Quantity 120	230	240
	101	5MBTPB3006TW++R	B1A53060	BIND T.T SCREW(+) / M3 X 6 CRFREE S-T			
	102	C2895120		SHIM 8.2-0.25T			

- Parts with "•" are component parts or sub-assemblies of the assembly appearing immediately above them.
- Parts with "⊙" indicate regular maintenance parts.
- Parts with "• •" are component parts or sub-assembly with "•" appearing immediately above them.

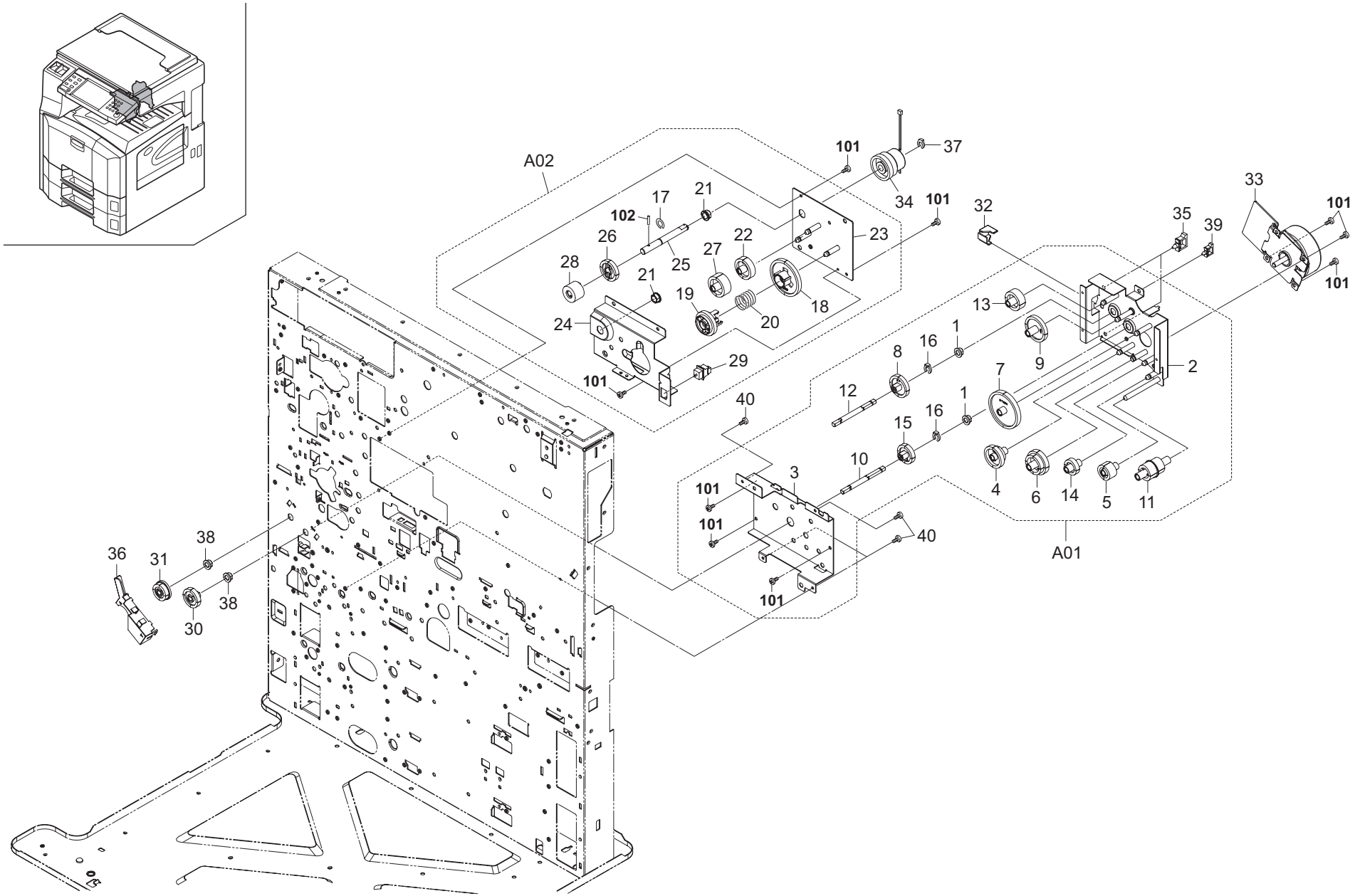
A02
101
37
34
101
17
21
102
26
25
27
22
23
28
21
19
20
18
24
29
101
32
35
39
33
101
101
13
1
16
8
9
2
7
12
1
16
15
40
10
3
101
101
101
4
6
14
5
11
40
A01
36
31
38
38
30

FIG. 16 Drive Section 2

	Ref. No.	Part.No.	Alternative.	Description	Quantity 120	230	240
⊙	A01	302H093160	2H093160	PARTS FEED DRIVE UNIT	1	1	1
	1	•302H024370	2H024370	BUSH 6 EW	2	2	2
	2	•302H031030	2H031030	MOUNT FEED DRIVE	1	1	1
	3	•302H031040	2H031040	BASE FEED DRIVE	1	1	1
⊙	4	•302H031050	2H031050	GEAR Z24H-Z35S FEED	1	1	1
⊙	5	•302H031060	2H031060	GEAR Z23H FEED B	1	1	1
⊙	6	•302H031080	2H031080	GEAR Z60H-Z30H FEED	1	1	1
⊙	7	•302H031100	2H031100	GEAR Z95H-Z41S FEED	1	1	1
⊙	8	•302H031120	2H031120	GEAR Z35S DU	1	1	1
⊙	9	•302H031150	2H031150	GEAR Z41S FEED	1	1	1
	10	•302H031200	2H031200	SHAFT FEED	1	1	1
⊙	11	•302H031210	2H031210	GEAR Z22H-Z24S FEED	1	1	1
	12	•302H031220	2H031220	SHAFT DU	1	1	1
⊙	13	•302H031250	2H031250	GEAR Z30S FEED	1	1	1
⊙	14	•302H031270	2H031270	GEAR Z23H FEED	1	1	1
⊙	15	•302H031280	2H031280	GEAR Z30S DPX	1	1	1
	16	•5MVX111DN003	2A806250	RING STOPPER /A-49 FEED A4	2	2	2
⊙	A02	302H093170	2H093170	PARTS CONT DRIVE ASSY	1	1	1
	17	•2BL21510		CUT WASHER 6	1	1	1
⊙	18	•2C922080		GEAR 60	1	1	1
	19	•2C922170		COUPLING CONT P	1	1	1
	20	•2C922260		SPRING CONT P	1	1	1
	21	•302H024360	2H024360	BUSH 8 EW	2	2	2
⊙	22	•302H031260	2H031260	GEAR Z33S CONT	1	1	1
	23	•302H031290	2H031290	BASE CONT DRIVE	1	1	1
	24	•302H031300	2H031300	MOUNT CONT DRIVE	1	1	1
	25	•302H031350	2H031350	SHAFT CONT	1	1	1
⊙	26	•302H031380	2H031380	GEAR Z33S CONT C	1	1	1
⊙	27	•302H031390	2H031390	GEAR Z33S CONT D	1	1	1
⊙	28	•302H031400	2H031400	TORQUE LIMITER 4000	1	1	1
⊙	29	•7SP01000001+H01	SP044290	SW.PUSH	1	1	1
⊙	30	302H031280	2H031280	GEAR Z30S DPX	1	1	1
⊙	31	302H031310	2H031310	GEAR Z26S DU	1	1	1
	32	302H031360	2H031360	HOLDER MOTOR	1	1	1
⊙	33	302H094200	2H094200	PARTS MOTOR MAIN SP	1	1	1
⊙	34	302H094220	2H094220	PARTS CLUTCH REGISTRATION SP	1	1	1
	35	7YZM610003++H01	YZ010250	ACCESS SADDLE	2	2	2
	36	302H024410	2H024410	COVER DRIVE MID FEED	1	1	1
	37	2BC06910		STOPPER 6	1	1	1
	38	302H024370	2H024370	BUSH 6 EW	2	2	2
	39	7YZM610007++H01	YZ023340	ACCESS.SADDLE	1	1	1
	40	303KZ02180	3KZ02180	PIN SCREW BIND 3X6S	4	4	4

	Ref. No.	Part.No.	Alternative.	Description	Quantity 120	230	240
	101	5MBTPB3006TW++R	B1A53060	BIND T.T SCREW(+) / M3 X 6 CRFREE S-T			
	102	5MBP2010WXSP	E0020100	SPRING PIN / M2 X 10 S-BLK			

- Parts with "•" are component parts or sub-assemblies of the assembly appearing immediately above them.
- Parts with "⊙" indicate regular maintenance parts.
- Parts with "• •" are component parts or sub-assembly with "•" appearing immediately above them.

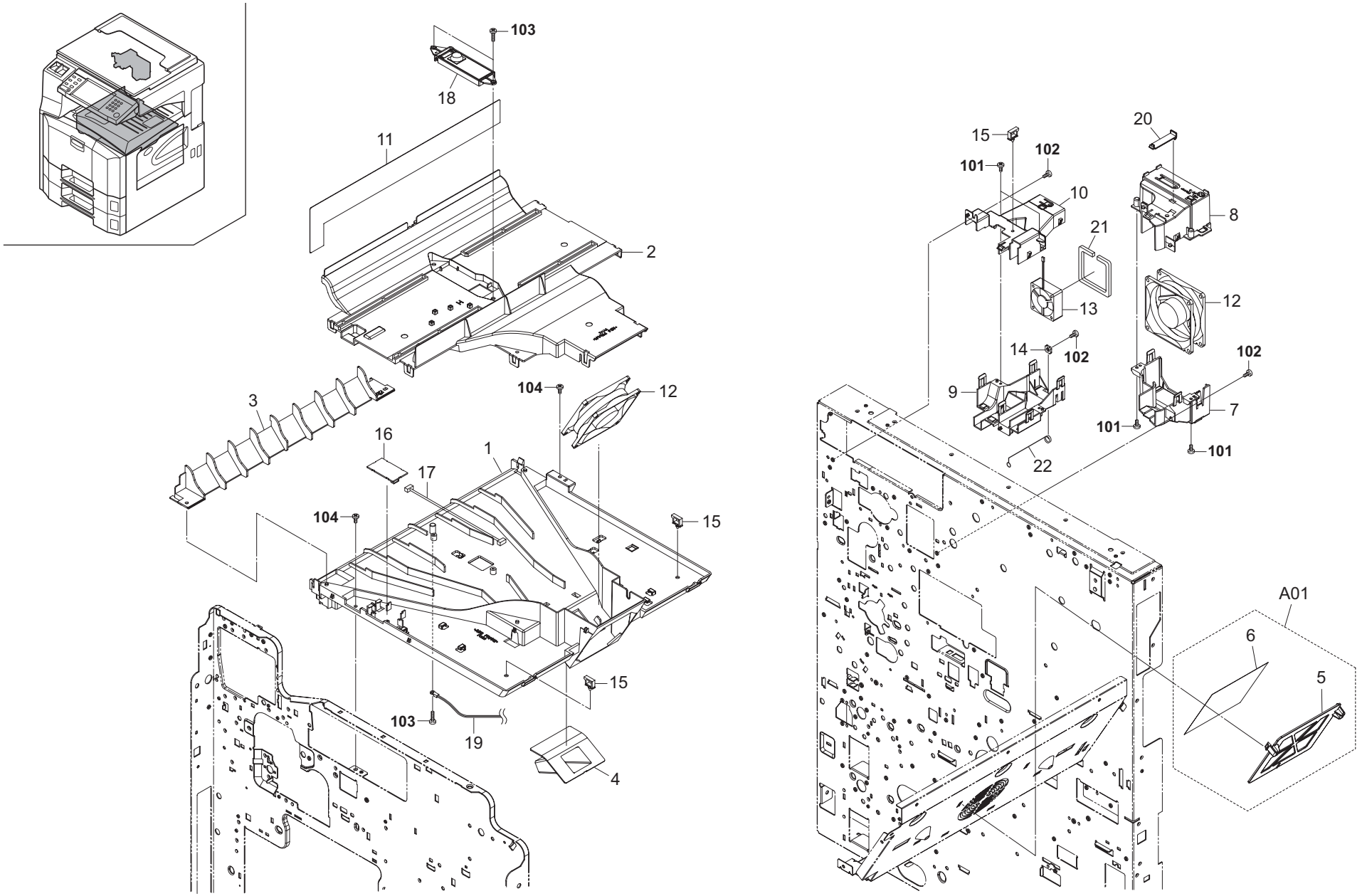
103
18
11
2
104
12
3
16
1
17
104
15
15
103
19
4
15
101
102
10
20
8
21
13
12
14
102
102
9
7
101
101
22
A01
6
5

FIG. 17 Cooling Section

2JB/2JC

	Ref. No.	Part.No.	Alternative.	Description	Quantity 120	230	240
	1	302H033010	2H033010	DUCT BASE	1	1	1
	2	302H033020	2H033020	DUCT LID H		1	
	2	302H033100	2H033100	DUCT LID G	1		
	2	302H033120	2H033120	DUCT LID J			1
	3	302H033030	2H033030	DUCT PLATE	1	1	1
	4	302H033040	2H033040	DUCT BOTTOM	1	1	1
⊙	A01	302H094400	2H094400	PARTS HOLDER FILTER A SP	1	1	1
⊙	5	•302H033050	2H033050	HOLDER FILTER A	1	1	1
	6	•302H033060	2H033060	FILTER DUST A	1	1	1
	7	302H033080	2H033080	DUCT REAR LOWER	1	1	1
	8	302H033090	2H033090	DUCT REAR UPPER	1	1	1
	9	302H033130	2H033130	DUCT REAR B LOWER	1	1	1
	10	302H033140	2H033140	DUCT REAR B UPPER	1	1	1
	11	302H033160	2H033160	SHEET DUCT	1	1	1
⊙	12	2C927070		FAN COOLING 80-25	2	2	2
⊙	13	3H627280		FAN DP	1	1	1
	14	5MMS111SL002	2BY20050	NUT FUSER A /FS-1800/3800 A4	1	1	1
	15	7YZM610001++H01	YZ010230	ACCESS SADDLE	3	3	3
⊙	16	302F845040	2F845040	R/W MODULE 26X45	1	1	1
	17	302GR46590	2GR46590	WIRE RFID	1	1	1
⊙	18	302H001170	2H001170	CONT SENSOR ASS'Y	1	1	1
⊙	19	302H094470	2H094470	PARTS THERMISTOR SP	1	1	1
	20	302H039290	2H039290	LID DUCT	1	1	1
	21	302H033190	2H033190	SPONGE REAR FAN	1	1	1
	22	302H039330	2H039330	GROUND REAR COVER	1	1	1

	Ref. No.	Part.No.	Alternative.	Description	Quantity 120	230	240
	101	5MBTPB3008PW++R	B1A63080	BIND T.T SCREW(+) / M3 X 8 CRFREE P-T			
	102	7BB102308H	BB046210	TP TAP-TITE SCREW M3X8			
	103	5MBTPB3012PW++R	B1A63120	BIND T.T SCREW(+) / M3 X 12 CRFREE P-T			
	104	5MBTPB3006TW++R	B1A53060	BIND T.T SCREW(+) / M3 X 6 CRFREE S-T			

- Parts with "•" are component parts or sub-assemblies of the assembly appearing immediately above them.
- Parts with "⊙" indicate regular maintenance parts.
- Parts with "• •" are component parts or sub-assembly with "•" appearing immediately above them.

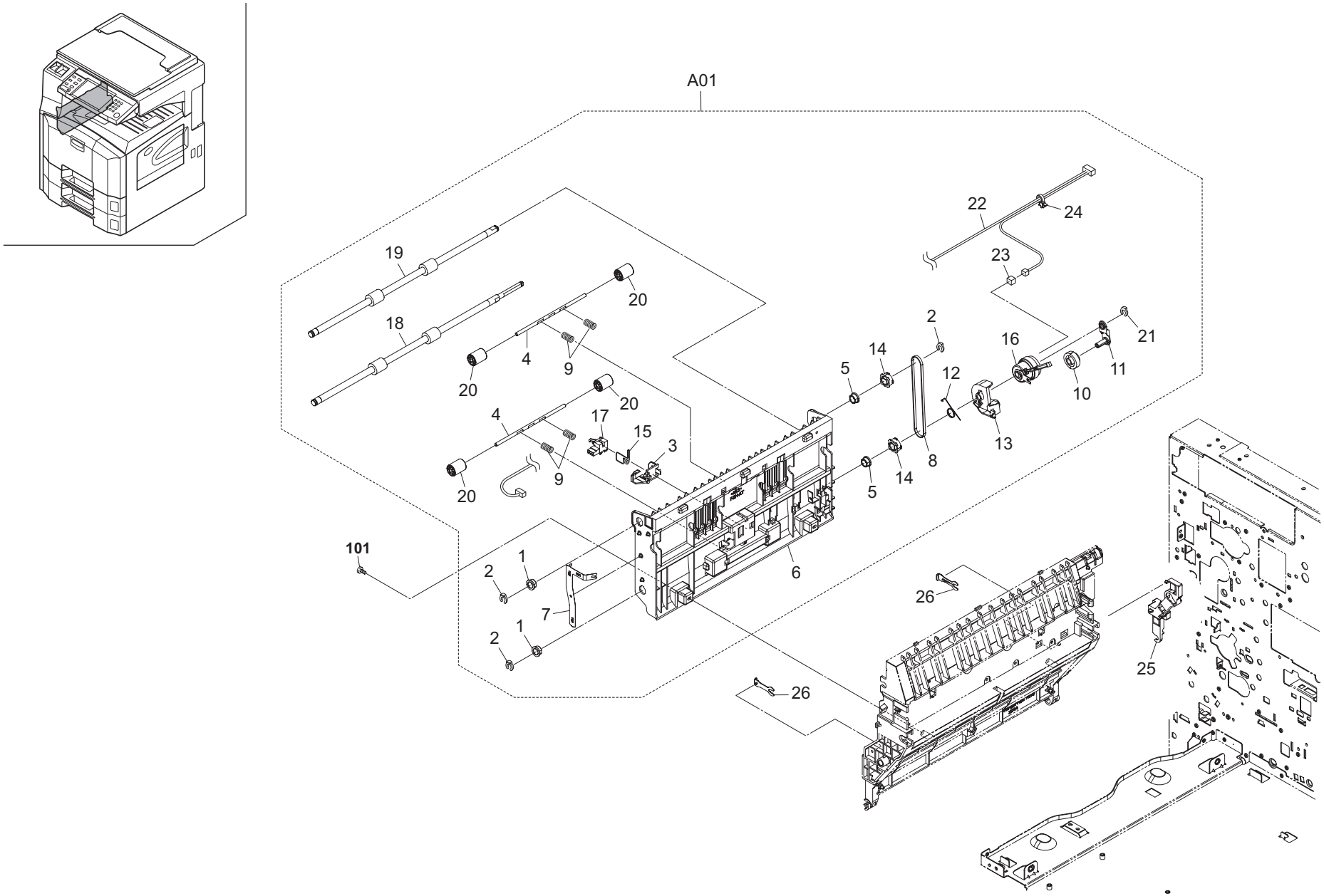
A01
19
18
20
4
9
20
20
4
17
15
3
9
20
101
2
1
7
1
2
6
5
14
2
12
8
5
14
13
16
10
11
21
22
24
23
26
26
25

FIG. 18 Duplex Section

	Ref. No.	Part.No.	Alternative.	Description	Quantity 120	230	240
⊙	A01	302H093200	2H093200	PARTS DUPLEX UNIT	1	1	1
⊙	1	•2BC06510		BUSHING 8	2	2	2
	2	•2BC06980		STOPPER 5	3	3	3
	3	•302H006300	2H006300	HOLDER FEED SWITCH	1	1	1
	4	•302H024090	2H024090	SHAFT MID FEED	2	2	2
	5	•302H024360	2H024360	BUSH 8 EW	2	2	2
	6	•302H029010	2H029010	FRAME DU	1	1	1
	7	•302H029020	2H029020	GROUND PLATE DU	1	1	1
⊙	8	•302H029030	2H029030	BELT DU 254	1	1	1
	9	•302H029060	2H029060	SPRING DU FEED	4	4	4
⊙	10	•302H029070	2H029070	GEAR Z25S	1	1	1
	11	•302H029080	2H029080	PLATE DU DRIVE	1	1	1
	12	•302H029090	2H029090	SPRING DU DRIVE	1	1	1
	13	•302H029100	2H029100	JUNCTION PLATE DU	1	1	1
⊙	14	•302H029110	2H029110	PULLEY 26 DU	2	2	2
	15	•302H029130	2H029130	GROUND DUPLEX PI	1	1	1
⊙	16	•302H094210	2H094210	PARTS CLUTCH FEED SP	1	1	1
⊙	17	•302H094230	2H094230	PARTS SWITCH CONVEYING SP	1	1	1
⊙	18	•302H094380	2H094380	PARTS DUPLEX A SP	1	1	1
⊙	19	•302H094390	2H094390	PARTS DUPLEX B SP	1	1	1
⊙	20	•3HY07120		PULLEY 15 DUPLEX	4	4	4
	21	•5MVX111DN003	2A806250	RING STOPPER /A-49 FEED A4	1	1	1
	22	•302H046370	2H046370	WIRE DU	1	1	1
	23	•7YCC02B1001+H01	YC014610	CONNECTOR	1	1	1
	24	•7YZM420003++H01	YZ052580	ACCESS.BAND	1	1	1
	25	302H024500	2H024500	COVER DU WIRE	1	1	1
	26	302H024510	2H024510	STOPPER SHUTTER	2	2	2

	Ref. No.	Part.No.	Alternative.	Description	Quantity 120	230	240
	101	5MBTPB3008PW++R	B1A63080	BIND T.T SCREW(+) / M3 X 8 CRFREE P-T			

- Parts with "•" are component parts or sub-assemblies of the assembly appearing immediately above them.
- Parts with "⊙" indicate regular maintenance parts.
- Parts with "• •" are component parts or sub-assembly with "•" appearing immediately above them.

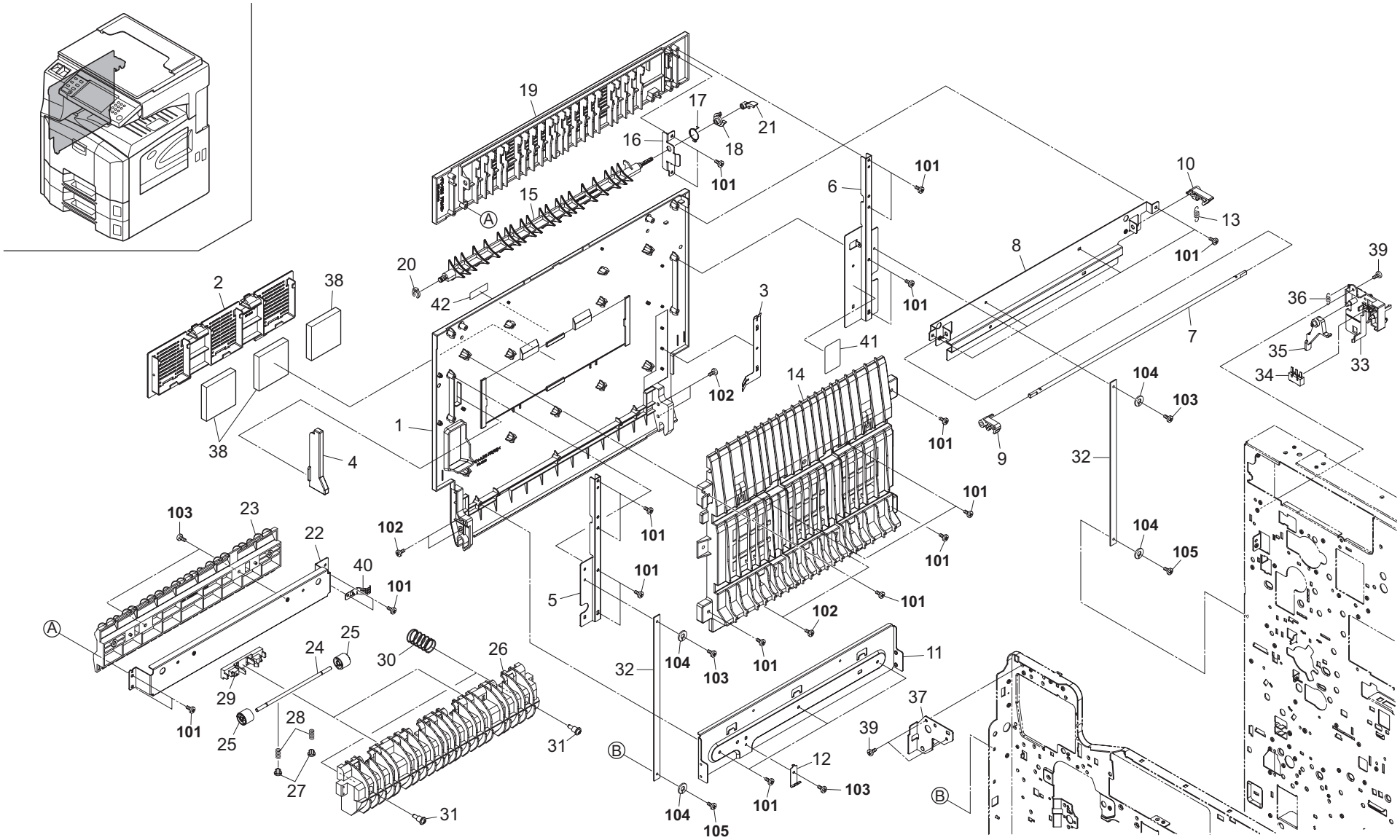
19
17
21
16
18
101
15
A
6
101
10
13
101
8
39
20
42
2
38
3
101
36
7
35
33
41
14
102
104
103
34
1
38
4
101
9
32
101
103
23
22
102
101
104
105
40
101
101
101
5
101
102
A
25
24
30
26
32
104
103
101
11
29
28
37
101
25
39
31
B
12
27
103
31
104
101
105
B

FIG. 19 Exit Section 1

2JB/2JC

	Ref. No.	Part.No.	Alternative.	Description	Quantity 120	230	240
	1	302H004470	2H004470	LEFT COVER MIDDLE	1	1	1
⊙	2	302H004620	2H004620	COVER OZONE FILTER	1	1	1
	3	302H004640	2H004640	PLATE EARTH LEFT COVER	1	1	1
	4	302H004400	2H004400	JUNCTION PLATE HOOK	1	1	1
	5	302H004490	2H004490	MOUNT STRAP F	1	1	1
	6	302H004500	2H004500	MOUNT STRAP R	1	1	1
	7	302H004410	2H004410	SHAFT HOOK	1	1	1
	8	302H004510	2H004510	PLATE LEFT COVER MIDDLE	1	1	1
	9	302H004380	2H004380	HOOK LEFT COVER F	1	1	1
	10	302H004390	2H004390	HOOK LEFT COVER R	1	1	1
	11	302H004630	2H004630	PLATE LEFT COVER LOW	1	1	1
⊙	12	302H004670	2H004670	PLATE EARTH LEFT COVER B	1	1	1
	13	2C904350		SPRING LEFT HOOK	1	1	1
	14	302H004420	2H004420	GUIDE LEFT COVER	1	1	1
	15	302H028310	2H028310	GUIDE SEPARATE FEED	1	1	1
	16	302H028560	2H028560	REAR PLATE SEP	1	1	1
	17	302H028370	2H028370	SPRING SEPARATE FEED	1	1	1
	18	302H028360	2H028360	ARM SEPARATE FEED B	1	1	1
⊙	19	302H004610	2H004610	COVER LEFT SEPARATE	1	1	1
	20	5MVX111DN003	2A806250	RING STOPPER /A-49 FEED A4	1	1	1
	21	302H028350	2H028350	ARM SEPARATE FEED A	1	1	1
	22	302H028380	2H028380	PLATE EXIT FEED	1	1	1
	23	302H028340	2H028340	GUIDE DU	1	1	1
	24	302H028400	2H028400	SHAFT SEP FEED	2	2	2
	25	302H028320	2H028320	PULLEY SEP FEED	4	4	4
	26	302H028330	2H028330	GUIDE EXIT LOWER	1	1	1
	27	2FM04150	5MVM163DN005	CAP SPRING /B-11 ENCLOSURE A4	4	4	4
	28	302H028410	2H028410	SPRING EXIT FEED	4	4	4
	29	302H028510	2H028510	HOLDER SEP FEED	2	2	2
	30	302H028390	2H028390	SPRING GUIDE DU	2	2	2
	31	2C921400		SHOULDER SCREW EXIT	2	2	2
	32	302H004340	2H004340	STRAP LEFT COVER	2	2	2
	33	302H004450	2H004450	MOUNT LEFT INTERLOCK SW	1	1	1
⊙	34	7SM010202+++H01	SM044270	SW.MICRO	1	1	1
	35	302H004460	2H004460	ARM LEFT INTERLOCK SW	1	1	1
	36	2C904340		SPRING LEFT INTERLOCK	1	1	1
	37	302H004430	2H004430	PIN LEFT COVER HOOK F	1	1	1
	38	302H033170	2H033170	FILTER OZONE A	3	3	3
	39	303KZ02180	3KZ02180	PIN SCREW BIND 3X6S	3	3	3
	40	302H028590	2H028590	PLATE GUIDE DU	1	1	1
	41	302H034130	2H034130	LABEL HIGH TEMP	1	1	1
⊙	42	302FB05441	2FB05441	LABEL VFEED CAUTION	1	1	1

	Ref. No.	Part.No.	Alternative.	Description	Quantity 120	230	240
	101	5MBTPB3008PW++R	B1A63080	BIND T.T SCREW(+) / M3 X 8 CRFREE P-T			
	102	5MBTPB3010TW++R	B1A53100	BIND T.T SCREW(+) / M3 X 10 CRFREE S-T			
	103	5MBTPB3006TW++R	B1A53060	BIND T.T SCREW(+) / M3 X 6 CRFREE S-T			
	104	7BC00030A080H01	BC046150	WASHER M3X10X0.8T			
	105	7BB102308H	BB046210	TP TAP-TITE SCREW M3X8			

- Parts with "•" are component parts or sub-assemblies of the assembly appearing immediately above them.
- Parts with "⊙" indicate regular maintenance parts.

- Parts with "• •" are component parts or sub-assembly with "•" appearing immediately above them.

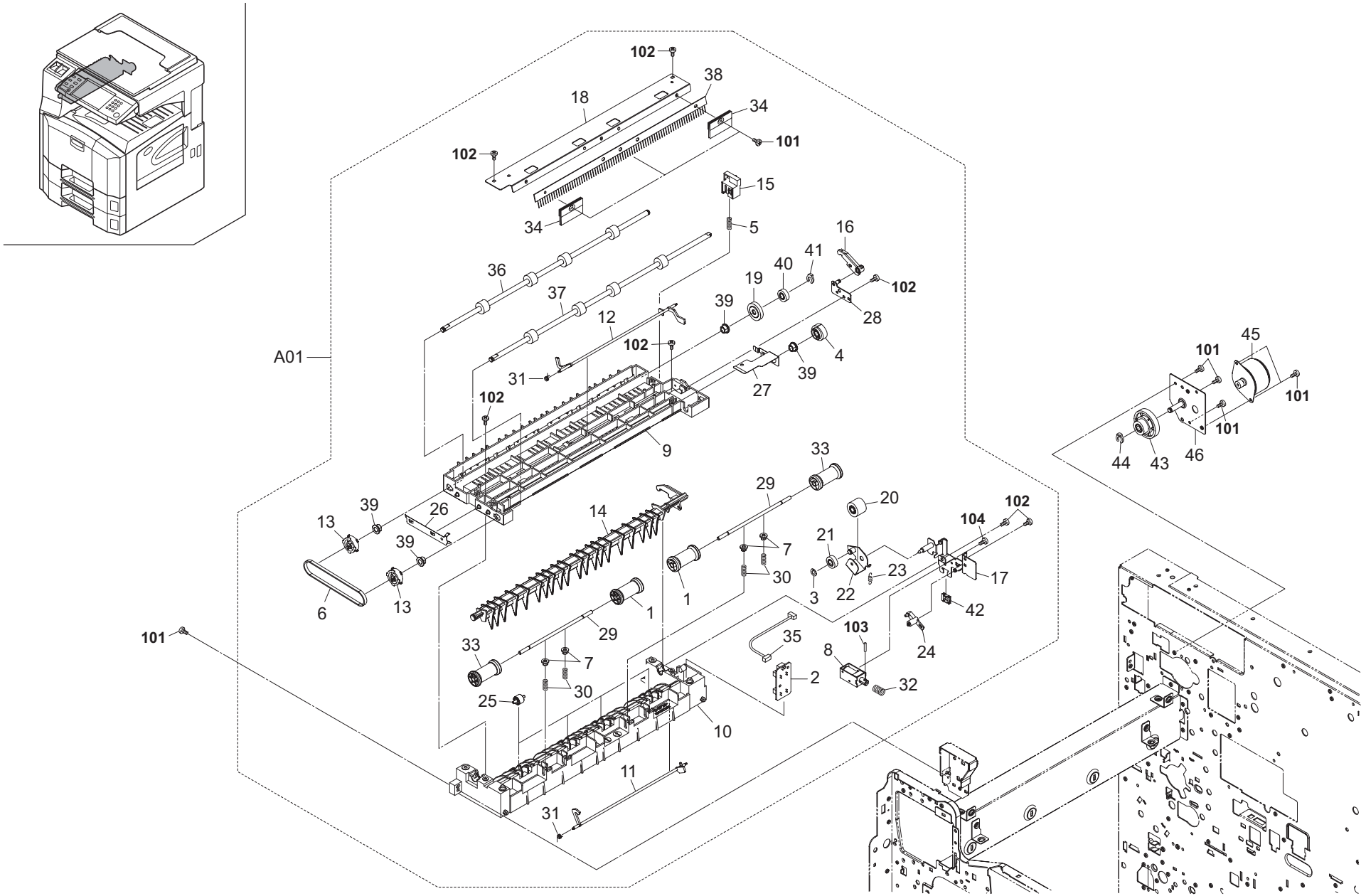
102
38
18
34
101
102
15
34
5
16
36
41
40
19
102
37
39
28
12
102
4
A01
31
39
27
102
9
45
101
101
101
44
43
46
33
29
20
39
26
14
102
13
104
39
21
7
23
17
30
3
22
1
6
13
1
42
29
101
35
103
24
33
8
7
2
32
30
25
10
11
31

FIG. 20 Exit Section 2

2JB/2JC

	Ref. No.	Part.No.	Alternative.	Description	Quantity 120	230	240
⊙	A01	302H093190	2H093190	PARTS EXIT UNIT	1	1	1
	1	•2BL21450		PULLEY EXIT B	2	2	2
⊙	2	•2C901060		PCB EJECT SW ASSY	1	1	1
	3	•2C904550		CUT WASHER 5	1	1	1
⊙	4	•2C921120		GEAR 23 EXIT	1	1	1
	5	•2C921290		SPRING LINK	1	1	1
⊙	6	•2FB17260		BELT FEED HANDLE	1	1	1
	7	•2FM04150	5MVM163DN005	CAP SPRING /B-11 ENCLOSURE A4	4	4	4
⊙	8	•302GR44160	2GR44160	SOLENOID FEED SHIFT	1	1	1
	9	•302H028010	2H028010	FRAME EXIT UPPER	1	1	1
	10	•302H028020	2H028020	FRAME EXIT LOWER	1	1	1
	11	•302H028040	2H028040	ACTUATOR EXIT INNER	1	1	1
	12	•302H028050	2H028050	ACTUATOR EXIT FEED	1	1	1
⊙	13	•302H028070	2H028070	PULLEY EJECT T32	2	2	2
	14	•302H028090	2H028090	GUIDE SEPARATE INNER	1	1	1
	15	•302H028100	2H028100	LEVER LINK	1	1	1
	16	•302H028120	2H028120	ARM LINK	1	1	1
	17	•302H028150	2H028150	PLATE EXIT A	1	1	1
	18	•302H028160	2H028160	PLATE EXIT B	1	1	1
⊙	19	•302H028170	2H028170	GEAR EXIT FEED 21	1	1	1
⊙	20	•302H028180	2H028180	GEAR EXIT FEED 17	1	1	1
⊙	21	•302H028190	2H028190	GEAR EXIT FEED 13	1	1	1
	22	•302H028200	2H028200	PLATE EXIT JOINT	1	1	1
	23	•302H028210	2H028210	SPRING EXIT JOINT	1	1	1
	24	•302H028220	2H028220	LINK SOLENOID	1	1	1
	25	•302H028230	2H028230	PULLEY EXIT FEED	4	4	4
	26	•302H028250	2H028250	GROUND PLATE EXIT A	1	1	1
	27	•302H028260	2H028260	GROUND PLATE EXIT B	1	1	1
	28	•302H028300	2H028300	PLATE ARM LINK	1	1	1
	29	•302H028400	2H028400	SHAFT SEP FEED	2	2	2
	30	•302H028410	2H028410	SPRING EXIT FEED	4	4	4
	31	•302H028520	2H028520	SPRING ACTUATOR INNER	2	2	2
	32	•302H028540	2H028540	SPRING SOLENOID	1	1	1
	33	•302H028570	2H028570	PULLEY EXIT	2	2	2
⊙	34	•302H028580	2H028580	FILM EXIT	2	2	2
	35	•302H046140	2H046140	WIRE EJECT UNIT	1	1	1
⊙	36	•302H094360	2H094360	PARTS ROLLER EXIT FEED SP	1	1	1
⊙	37	•302H094370	2H094370	PARTS ROLLER EXIT INNER SP	1	1	1
⊙	38	•34821210		STATIC ELIMINATOR B,EJECT	1	1	1
	39	•3CY07080		BUSHING 6	4	4	4
⊙	40	•5AAVCLTCH018	2A806910	ONE WAY CLUTCH /A-49 MPF A4	1	1	1
	41	•5MVX111DN003	2A806250	RING STOPPER /A-49 FEED A4	1	1	1
	42	•M2104390		EDGING,EDS-0607L(KITAGAWA)	1	1	1
⊙	43	302H028290	2H028290	GEAR EXIT 73/21	1	1	1
	44	5MVX111DN003	2A806250	RING STOPPER /A-49 FEED A4	1	1	1
⊙	45	2C927020		MOTOR EJECT	1	1	1
	46	302H028280	2H028280	PLATE EXIT DRIVE	1	1	1

	Ref. No.	Part.No.	Alternative.	Description	Quantity 120	230	240
	101	5MBTPB3006TW++R	B1A53060	BIND T.T SCREW(+) / M3 X 6 CRFREE S-T			
	102	5MBTPB3008PW++R	B1A63080	BIND T.T SCREW(+) / M3 X 8 CRFREE P-T			
	103	E0120220		SPRING PIN 2X22(SUS)			
	104	B1B00030		+BIND SCREW M2.6X03(TRIVARENT CHROMAT			

- Parts with "•" are component parts or sub-assemblies of the assembly appearing immediately above them.
- Parts with "⊙" indicate regular maintenance parts.
- Parts with "• •" are component parts or sub-assembly with "•" appearing immediately above them.

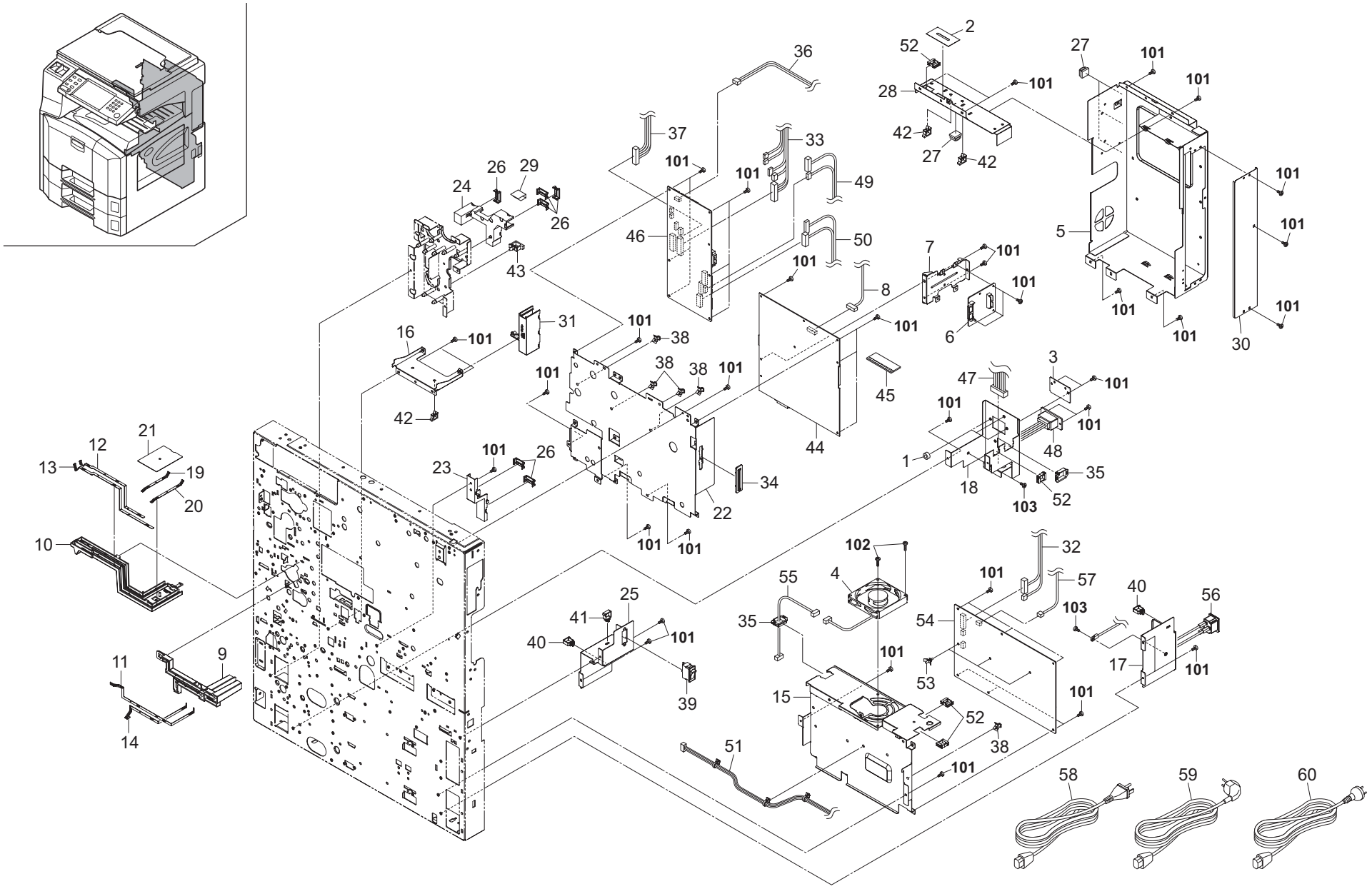
1
2
3
4
5
6
7
8
9
10
11
12
13
14
15
16
17
18
19
20
21
22
23
24
25
26
27
28
29
30
31
32
33
34
35
36
37
38
39
40
41
42
43
44
45
46
47
48
49
50
51
52
53
54
55
56
57
58
59
60
101
102
103

FIG. 21 Electrical Components 1

2JB/2JC

	Ref. No.	Part.No.	Alternative.	Description	Quantity 120	230	240
	1	302H002380	2H002380	SHIELD SCREW	3	3	3
	2	302DA26560	2DA26560	FILM SHIELD FFC	1	1	1
	3	302FB26290	2FB26290	LID VENDOR	1	1	1
⊙	4	302GR44050	2GR44050	FAN CONTROLLER 80-15	1	1	1
	5	302JC39020	2JC39020	SHIELD MAIN PWB C	1	1	1
⊙	6	302JB94060	2JB94060	PARTS,PWB INTERFACE ASSY SP	1	1	1
	7	302JC39060	2JC39060	MOUNT PRINT CONNECTOR	1	1	1
	8	302JB46010	2JB46010	WIRE PANEL MAIN	1	1	1
	9	302H039060	2H039060	BASE TERMINAL MAIN	1	1	1
	10	302H039070	2H039070	BASE TERMINAL TRANSFER	1	1	1
	11	302H039080	2H039080	TERMINAL MAIN	1	1	1
	12	302H039090	2H039090	TERMINAL TRANSFER	1	1	1
	13	302H039100	2H039100	TERMINAL SEPARATION	1	1	1
	14	302H039110	2H039110	TERMINAL DLP	1	1	1
	15	302H039120	2H039120	MOUNT POWER PWB	1	1	1
	16	302H039160	2H039160	MOUNT HV PWB	1	1	1
	17	302H039170	2H039170	MOUNT INLET	1	1	1
	18	302H039180	2H039180	MOUNT OPTION I/F	1	1	1
	19	302H039190	2H039190	TERMINAL TRANSFER R	1	1	1
	20	302H039200	2H039200	TERMINAL SEPARATION R	1	1	1
	21	302H039210	2H039210	LID HV TERMINAL	1	1	1
	22	302JC39010	2JC39010	MOUNT ENGINE MAIN C	1	1	1
	23	302H039230	2H039230	GUIDE WIRE R	1	1	1
	24	302H039240	2H039240	GUIDE WIRE L	1	1	1
	25	302H039260	2H039260	MOUNT MAIN SW	1	1	1
	26	302H039270	2H039270	LID WIRE GUIDE	6	6	6
	27	M2105890		CLAMP,CKN-05(KITAGAWA)	4	4	4
	28	302JC39070	2JC39070	SHIELD MAIN TOP	1	1	1
	29	302H002290	2H002290	FILM PROTECT A	1	1	1
	30	302JC39030	2JC39030	LID PRINTER BOARD	1	1	1
	31	302JC39110	2JC39110	GUIDE WIRE C	1	1	1
	32	302JB46040	2JB46040	WIRE LVU	1	1	1
	33	302H046280	2H046280	WIRE MAIN MOTOR	1	1	1
	34	5MVX621SH003	2BM26020	GUID CF CARD /45252C0006 A4	1	1	1
	35	7YZM210002++H01	YZ004730	ACCESS.EDGING	2	2	2
	36	302H046770	2H046770	WIRE LAMP INVERTER	1	1	1
	37	302H046300	2H046300	WIRE CONVEYING	1	1	1
	38	M2108130		SPACER,KGPS-4S	5	5	5
⊙	39	7SC010101+++H01	SC023350	SW.SEESAW	1	1	1
	40	7YZM610011++H01	YZ043000	ACCESS.SADDLE	2	2	2
	41	7YZM390002++H01	YZ012140	ACCESS.CLAMP	1	1	1
	42	7YZM610001++H01	YZ010230	ACCESS SADDLE	3	3	3
	43	7YZM610003++H01	YZ010250	ACCESS SADDLE	1	1	1
⊙	44	302JB94020	2JB94020	PARTS,PWB MAIN ASSY SP	1	1	1
⊙	45	5AAXAP072GEA++R	2DD27130	100PIN DIMM 64M	1	1	1
⊙	46	302H094340	2H094340	PARTS,PWB ENGINE ASS'Y,SP	1	1	1
	47	302H046320	2H046320	WIRE DF I/F	1	1	1
	48	302GR46160	2GR46160	WIRE FINISHER SOCKET	1	1	1
	49	302H046180	2H046180	WIRE LVU	1	1	1
	50	302H046120	2H046120	WIRE CASSETTE	1	1	1
	51	302H046440	2H046440	WIRE MAIN SW	1	1	1
	52	7YZM210005++H01	YZ037990	ACCESS.EDGING	4	4	4
	53	7YZM510007++H01	YZ042780	ACCESS.SPACER	3	3	3
⊙	54	302H093280	2H093280	PARTS LVU 100	1		
⊙	54	302H093290	2H093290	PARTS LVU 200		1	1
	55	302H046540	2H046540	WIRE LVU FAN	1	1	1
	56	302H046560	2H046560	WIRE INLET	1	1	1
	57	302H046680	2H046680	WIRE INTERLOCK JUNCTION	1	1	1
	58	3019527401	19527401	POWER CORD(120)	1		
	59	2AR27800		POWER CORD(230)		1	
	60	3029927232	29927232	POWER CODE AS(240)			1
	101	5MBTPB3006TW++R	B1A53060	BIND T.T SCREW(+) / M3 X 6 CRFREE S-T			
	102	5MBTPB3020TW++R	B1A53200	BIND T.T SCREW(+) / M3 X 20 CRFREE S-T			
	103	B9604060		GROUNDING SCREW M4X6 (BRASS,N;)			
	104	5MBTPB3014TW++R	B1A53140	BIND T.T SCREW(+) / M3 X 14 CRFREE S-T			

- Parts with "•" are component parts or sub-assemblies of the assembly appearing immediately above them.
- Parts with "⊙" indicate regular maintenance parts.
- Parts with "• •" are component parts or sub-assembly with "•" appearing immediately above them.

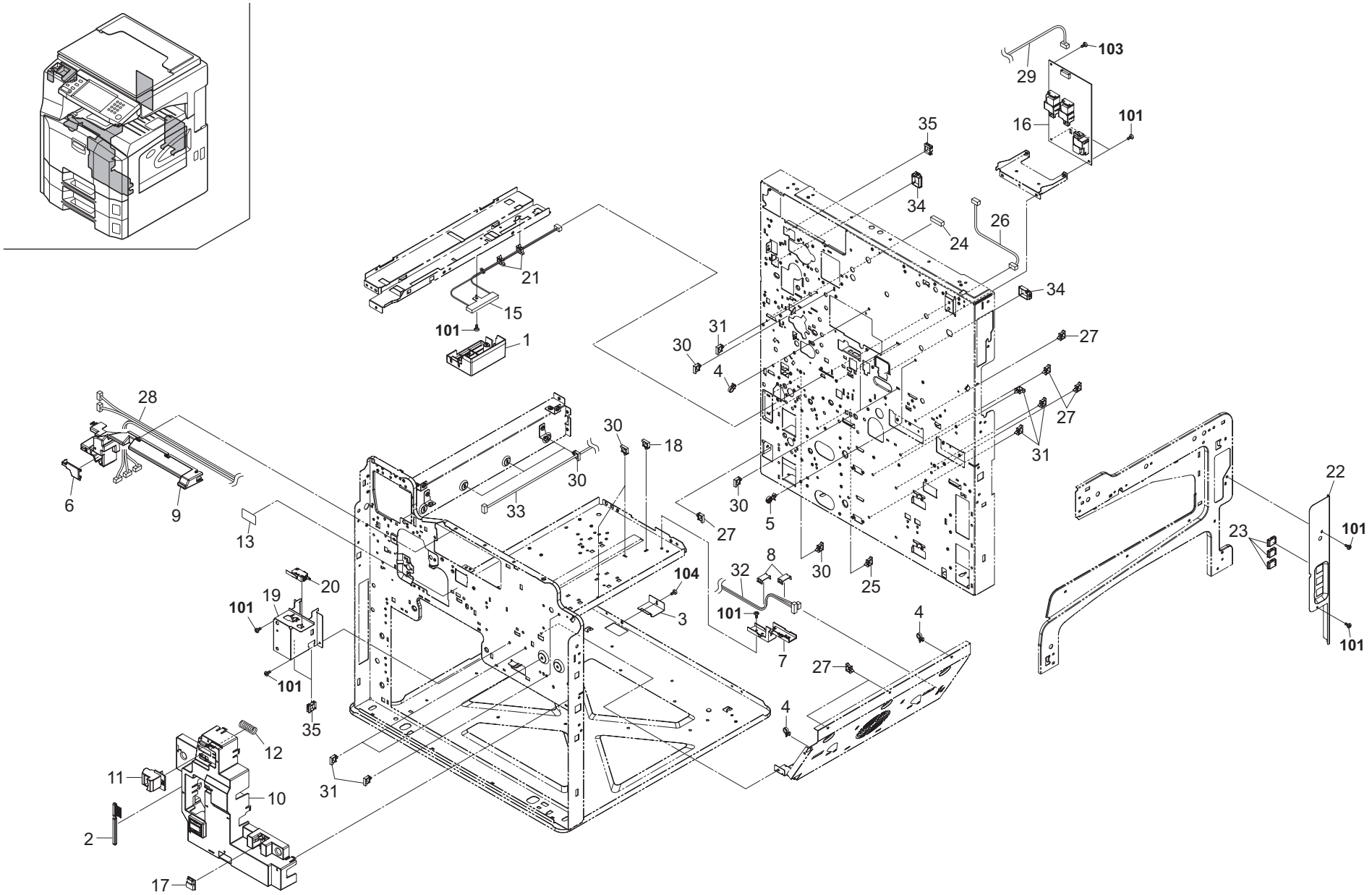
103
29
16
101
35
34
26
24
34
21
15
101
1
31
30
4
27
27
31
28
30
18
30
33
6
9
13
30
5
27
22
23
101
8
32
104
30
25
20
19
101
3
101
7
4
27
101
101
35
4
12
11
10
31
2
17

FIG. 22 Electrical Components 2

2JB/2JC

	Ref. No.	Part.No.	Alternative.	Description	Quantity 120	230	240
	1	302H002260	2H002260	SHIELD HEATER DRUM	1	1	1
⊙	2	2BL16220	5AAVBRUSH036	BRUSH CLEANER	1	1	1
	3	302GR39190	2GR39190	COVER CONN	1	1	1
	4	M21AH010		BAND,RSG-130-V0(KITAGAWA)	3	3	3
	5	5MVX431NN001	3D302100	SPACING CLIP /VSC-10 XX	1	1	1
	6	302H004760	2H004760	LID INNER COVER	1	1	1
	7	302H039230	2H039230	GUIDE WIRE R	1	1	1
	8	302H039270	2H039270	LID WIRE GUIDE	2	2	2
	9	302H004520	2H004520	COVER INNER TOP	1	1	1
	10	302H004210	2H004210	COVER INNER LOW	1	1	1
	11	302H004530	2H004530	LEVER CONT RELEASE	1	1	1
	12	302H004540	2H004540	SPRING CONT RELEASE	1	1	1
	13	2BL05150		LABEL RADIATION	1	1	1
	14	302H004330	2H004330	MOUNT SPEAKER	1	1	1
⊙	15	302H094240	2H094240	PARTS HEATER DRUM SP	1	1	1
⊙	16	302H094250	2H094250	PARTS,HIGH VOLTAGE,SP	1	1	1
⊙	17	302H094300	2H094300	PARTS,HUMIDITY SENSOR,SP	1	1	1
	18	7YZM610013++H01	YZ043020	ACCESS.SADDLE	1	1	1
	19	302H004320	2H004320	MOUNT INTERLOCK SW	1	1	1
⊙	20	2FB27160		INTER LOCK SWITCH	1	1	1
	21	7YZM610007++H01	YZ023340	ACCESS.SADDLE	2	2	2
	22	302JC39080	2JC39080	LID RIGHT TOP PLATE	1	1	1
	23	302JC39100	2JC39100	LID RIGHT PLATE	3	3	3
	24	7YCC09B1106+H01	YC051480	CONNECTOR	1	1	1
	25	7YZM610005++H01	YZ012220	ACCESS SADDLE	1	1	1
	26	302H046410	2H046410	WIRE DH JUNCTION	1	1	1
	27	7YZM610003++H01	YZ010250	ACCESS SADDLE	6	6	6
	28	302H046250	2H046250	WIRE FRONT	1	1	1
	29	302H046260	2H046260	WIRE HVU	1	1	1
	30	7YZM390002++H01	YZ012140	ACCESS.CLAMP	10	10	10
	31	7YZM610001++H01	YZ010230	ACCESS SADDLE	7	7	7
	32	302H046310	2H046310	WIRE MPF	1	1	1
	33	302H046380	2H046380	WIRE PRIMARY	1	1	1
	34	7YZM210002++H01	YZ004730	ACCESS.EDGING	2	2	2
	35	7YZM210005++H01	YZ037990	ACCESS.EDGING	3	3	3

	Ref. No.	Part.No.	Alternative.	Description	Quantity 120	230	240
	101	5MBTPB3006TW++R	B1A53060	BIND T.T SCREW(+) / M3 X 6 CRFREE S-T			
	102	B9A90010		+PAN SCREW 6-32X0.25			
	103	5MBTPB3008TW++R	B1A53080	BIND T.T SCREW(+) / M3 X 8 CRFREE S-T			
	104	7BB102308H	BB046210	TP TAP-TITE SCREW M3X8			

- Parts with "•" are component parts or sub-assemblies of the assembly appearing immediately above them.
- Parts with "⊙" indicate regular maintenance parts.
- Parts with "• •" are component parts or sub-assembly with "•" appearing immediately above them.

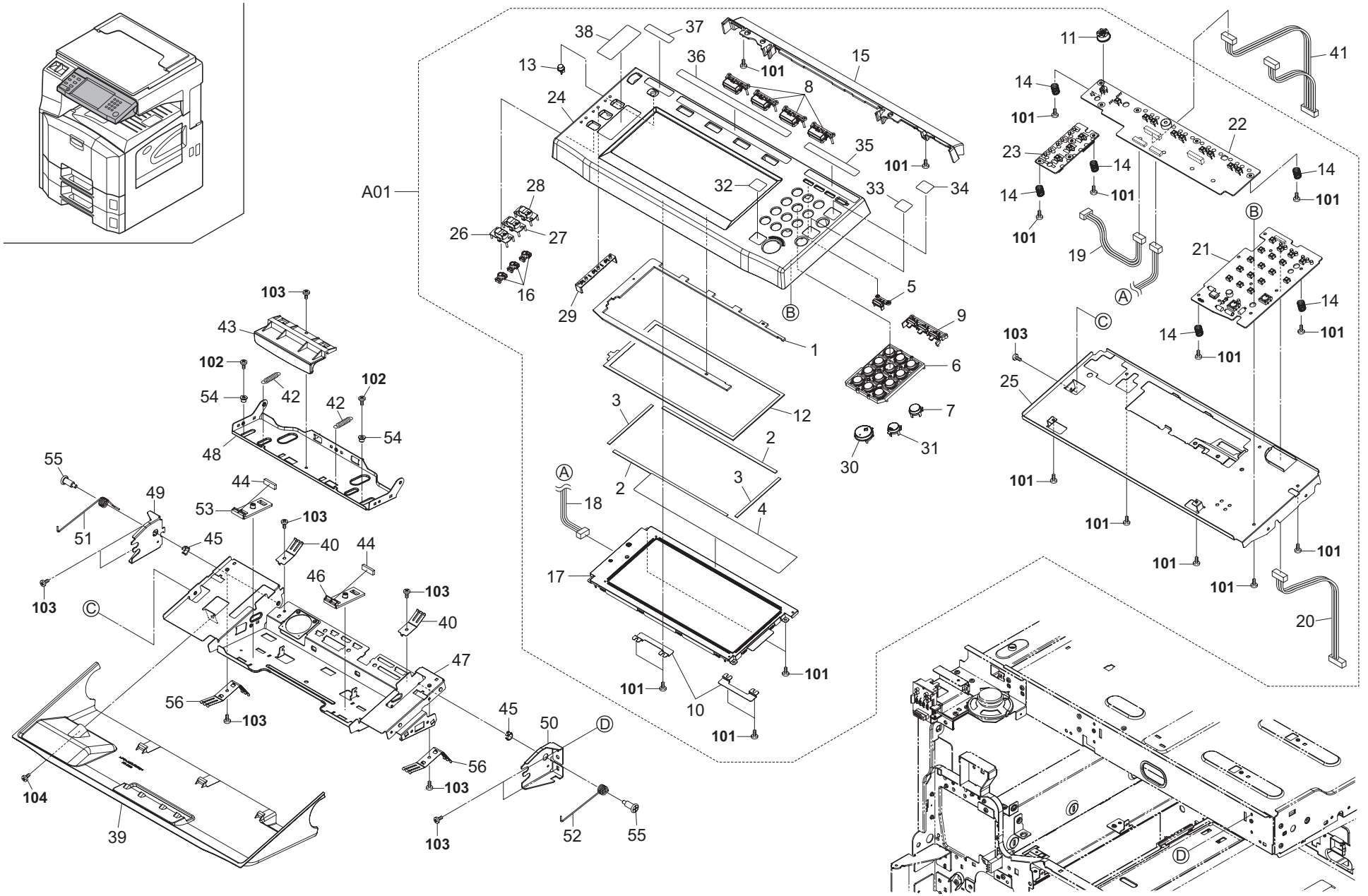
A01
1
2
3
4
5
6
7
8
9
10
11
12
13
14
15
16
17
18
19
20
21
22
23
24
25
26
27
28
29
30
31
32
33
34
35
36
37
38
39
40
41
42
43
44
45
46
47
48
49
50
51
52
53
54
55
56
101
102
103
104

FIG. 23 Operation Section

2JB/2JC

	Ref. No.	Part.No.	Alternative.	Description	Quantity 120	230	240
⊙	A01	302JC93020	2JC93020	PARTS OPERATION UNIT EXP	1	1	1
	1	•2BJ25240		BARRIER TABLET	1	1	1
	2	•2BJ25270		SPONGE LCD A	2	2	2
	3	•2BJ25280		SPONGE LCD B	2	2	2
	4	•2BJ25400		SHEET LCD A	1	1	1
⊙	5	•2DA25290		KEY MANAGEMENT	1	1	1
⊙	6	•2DA25350		KEY OPERATION 10	1	1	1
⊙	7	•2DC25070		KEY RESET	1	1	1
⊙	8	•2FB24150		KEY FUNCTION J	4	4	4
⊙	9	•302DA25031	2DA25031	KEY SAVER	1	1	1
	10	•302FB24250	2FB24250	RETAINER LCD	2	2	2
⊙	11	•302FB24470	2FB24470	KEY VOLUME	1	1	1
	12	•302FB25190	2FB25190	TABLET OPERATION	1	1	1
⊙	13	•302FZ05020	2FZ05020	KEY INIT	1	1	1
	14	•302FZ05190	2FZ05190	SPRING EARTH KEYTOP	6	6	6
	15	•302H005120	2H005120	COVER OPE REAR	1	1	1
	16	•302H005310	2H005310	LENS KEY B	3	3	3
	17	•302JB45010	2JB45010	LCD OPERATION	1	1	1
	18	•302JB46050	2JB46050	WIRE LCD	1	1	1
	19	•302JB46060	2JB46060	WIRE PANEL JUNCTION	1	1	1
	20	•302JB46070	2JB46070	WIRE PANEL RIGHT	1	1	1
⊙	21	•302JB94030	2JB94030	PARTS,PWB OPERATION RIGHT ASSY SP	1	1	1
⊙	22	•302JB94040	2JB94040	PARTS,PWB OPERATION TOP ASSY SP	1	1	1
⊙	23	•302JB94050	2JB94050	PARTS,PWB OPERATION BOTTOM ASSY SP	1	1	1
⊙	24	•302JC05010	2JC05010	COVER OPERATION	1	1	1
	25	•302JC05020	2JC05020	MOUNT LCD	1	1	1
⊙	26	•302JC05040	2JC05040	KEY COPY	1	1	1
⊙	27	•302JC05050	2JC05050	KEY PRINTER	1	1	1
⊙	28	•302JC05060	2JC05060	KEY FAX	1	1	1
	29	•302JC05070	2JC05070	LENS LED	1	1	1
⊙	30	•302JC05080	2JC05080	KEY PRINT	1	1	1
⊙	31	•302JC05100	2JC05100	KEY STOP	1	1	1
⊙	32	•302JC05180	2JC05180	LABEL START E	1	1	1
⊙	33	•302JC05190	2JC05190	LABEL STOP E	1	1	1
⊙	34	•302JC05200	2JC05200	LABEL RESET E	1	1	1
⊙	35	•302JC05210	2JC05210	LABEL POWER E	1	1	1
⊙	36	•302JC05220	2JC05220	LABEL FUNCTION E	1	1	1
⊙	37	•302JC05230	2JC05230	LABEL SYSTEM MENU E	1	1	1
⊙	38	•302JC05240	2JC05240	LABEL COPY E	1	1	1
⊙	39	302JC05030	2JC05030	COVER BASE OPERATION	1	1	1
	40	302H005370	2H005370	PLATE GROUND MOUNT OPE	2	2	2
	41	302JB46020	2JB46020	WIRE PANEL UNIT	1	1	1
	42	2FT02140		SPRING SHUTTER B	2	2	2
	43	302GR05070	2GR05070	HANDLE OPE	1	1	1
	44	302GR05080	2GR05080	CUSHION HANDLE A	2	2	2
	45	302GR05090	2GR05090	BUSH PIN OPE	2	2	2
	46	302GR05120	2GR05120	MOUNT SLIDE	1	1	1
	47	302H005030	2H005030	BASE OPERATION	1	1	1
	48	302H005040	2H005040	MOUNT HANDLE OPE	1	1	1
	49	302H005050	2H005050	HINGE OPE LEFT	1	1	1
	50	302H005060	2H005060	HINGE OPE RIGHT	1	1	1
	51	302H005070	2H005070	SPRING HINGE OPE L	1	1	1
	52	302H005080	2H005080	SPRING HINGE OPE R	1	1	1
	53	302H005320	2H005320	MOUNT SLIDE LEFT	1	1	1
	54	302H005340	2H005340	BUSH SLIDE OPE	2	2	2
	55	302H005350	2H005350	PIN HINGE OPE	2	2	2
	56	302H005360	2H005360	PLATE GROUND BASE OPE	2	2	2
	104	5MBTPB3008PW++R	B1A63080	BIND T.T SCREW(+) / M3 X 8 CRFREE P-T			
	101	5MBTPB3010TW++R	B1A53100	BIND T.T SCREW(+) / M3 X 10 CRFREE S-T			
	102	5MBTPB3006TW++R	B1A53060	BIND T.T SCREW(+) / M3 X 6 CRFREE S-T			
	105	7BB102308H	BB046210	TP TAP-TITE SCREW M3X8			

- Parts with "•" are component parts or sub-assemblies of the assembly appearing immediately above them.
- Parts with "⊙" indicate regular maintenance parts.
- Parts with "• •" are component parts or sub-assembly with "•" appearing immediately above them.

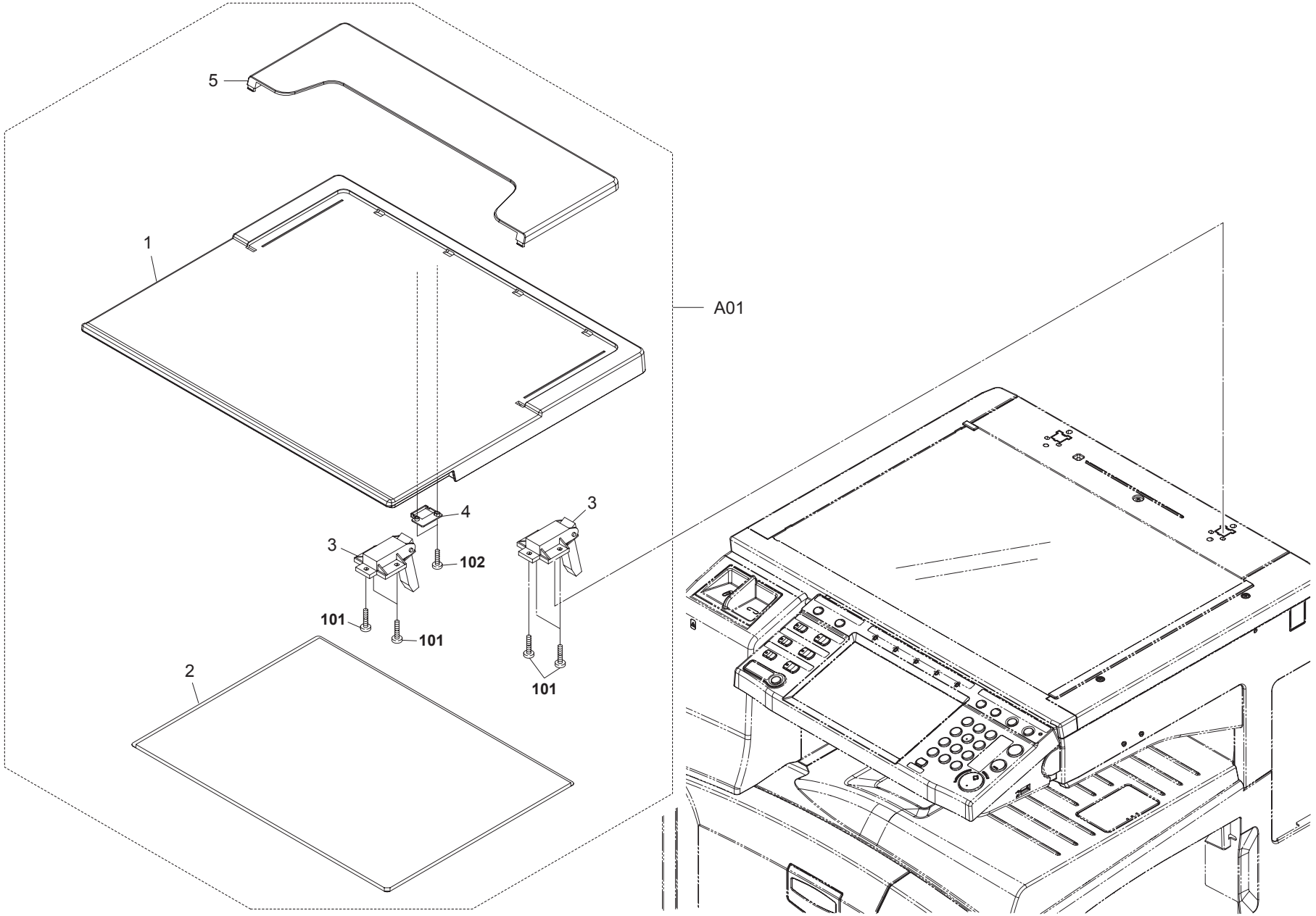
5
1
A01
4
3
3
102
101
101
2
101

FIG. 24 Options 1

	Ref. No.	Part.No.	Alternative.	Description	Quantity 120	230	240
⊙	A01	2CX82010		SET,PLATEN COVER TYPE D	1	1	1
	1	•2A612800		COVER,PLATEN	1	1	1
	2	•2A612810		MAT,ORIGINAL HOLDER	1	1	1
	3	•2A612820		HINGE,ORIGINAL HOLDER	2	2	2
	4	•2C912630		STOPPER RELEASE SWITCH	1	1	1
	5	•60904280		ORIGINAL POCKET	1	1	1

	Ref. No.	Part.No.	Alternative.	Description	Quantity 120	230	240
	101	5MBTPB4010PW++R	B1A64100	BIND T.T SCREW(+) / M4 X 10 CRFREE P-T			
	102	5MBTPB3012PW++R	B1A63120	BIND T.T SCREW(+) / M3 X 12 CRFREE P-T			

- Parts with "•" are component parts or sub-assemblies of the assembly appearing immediately above them.
- Parts with "⊙" indicate regular maintenance parts.
- Parts with "• •" are component parts or sub-assembly with "•" appearing immediately above them.

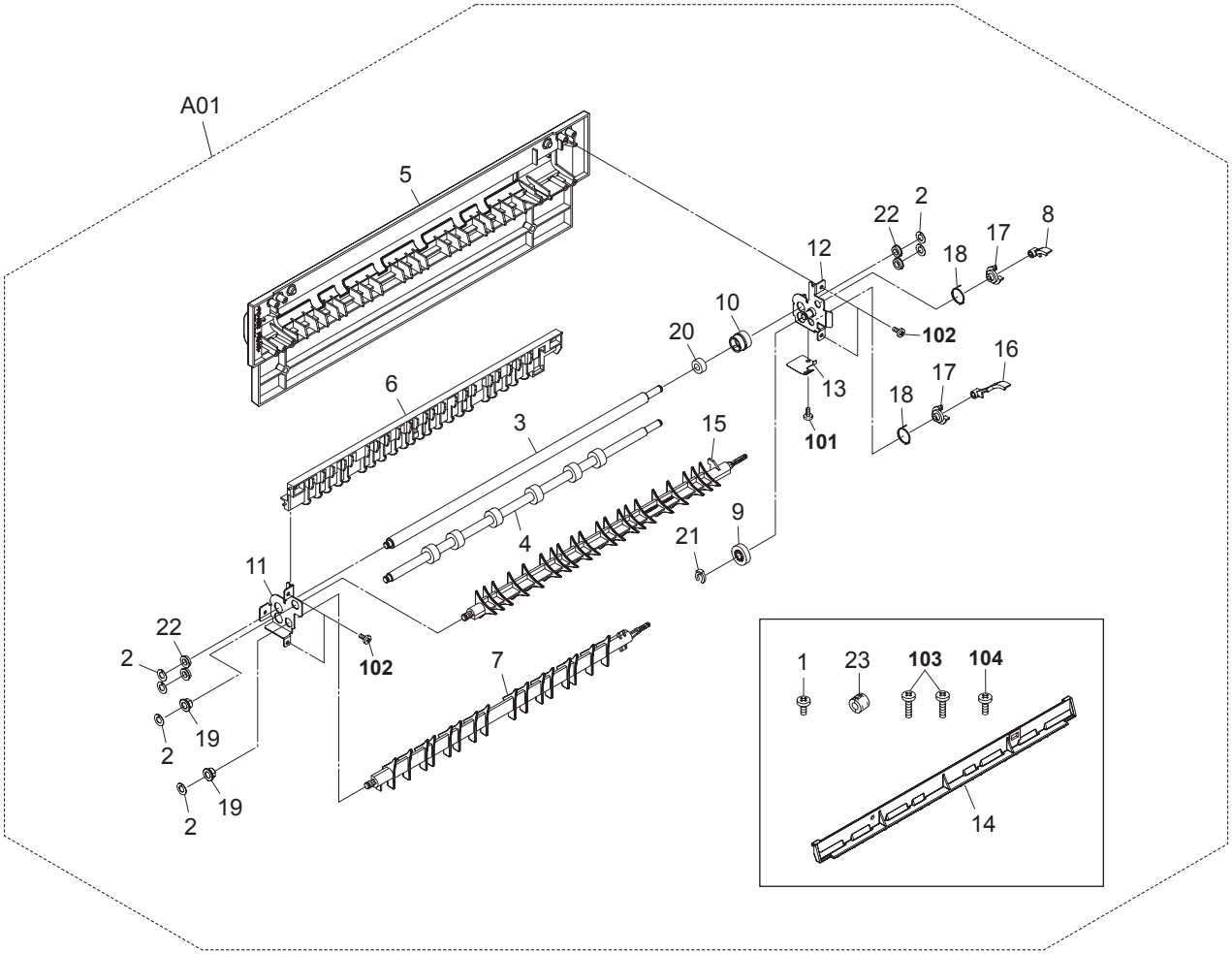
A01
5
6
3
4
15
10
20
12
22
2
18
17
8
102
13
101
16
9
21
11
22
2
102
7
2
19
2
19
1
23
103
104
14

FIG. 25 Options 2

	Ref. No.	Part.No.	Alternative.	Description	Quantity 120	230	240
	A01	1702H00UN0	072H00UN	AK-670/ATTACHMENT KIT	1	1	1
	1	•2BG12430		STUD SCREW SC	1	1	1
	2	•2C904550		CUT WASHER 5	6	6	6
⊙	3	•302H027010	2H027010	ROLLER FINISH UP	1	1	1
⊙	4	•302H027020	2H027020	ROLLER FINISH LOW	1	1	1
⊙	5	•302H027030	2H027030	COVER LEFT OP	1	1	1
	6	•302H027040	2H027040	GUIDE COVER	1	1	1
	7	•302H027050	2H027050	GUIDE SEPARATE FIN	1	1	1
	8	•302H027060	2H027060	ARM SEPARATE FIN	1	1	1
⊙	9	•302H027090	2H027090	GEAR EXIT FIN 17	1	1	1
⊙	10	•302H027100	2H027100	GEAR EXIT FIN 14	1	1	1
	11	•302H027110	2H027110	FRONT PLATE FIN	1	1	1
	12	•302H027120	2H027120	REAR PLATE FIN	1	1	1
	13	•302H027130	2H027130	PLATE SEP FIN	1	1	1
	14	•302H027150	2H027150	GUIDE INSERT	1	1	1
	15	•302H028310	2H028310	GUIDE SEPARATE FEED	1	1	1
	16	•302H028350	2H028350	ARM SEPARATE FEED A	1	1	1
	17	•302H028360	2H028360	ARM SEPARATE FEED B	2	2	2
	18	•302H028370	2H028370	SPRING SEPARATE FEED	2	2	2
	19	•3CY07080		BUSHING 6	2	2	2
⊙	20	•5AAVCLTCH018	2A806910	ONE WAY CLUTCH /A-49 MPF A4	1	1	1
	21	•5MVX111DN003	2A806250	RING STOPPER /A-49 FEED A4	1	1	1
	22	•68822330		BEARING,DRIVE	4	4	4
	23	•7YBER0R0U001H01	YB044700	FERRITE CORE	1	1	1

	Ref. No.	Part.No.	Alternative.	Description	Quantity 120	230	240
	101	5MBTPB3006TW++R	B1A53060	BIND T.T SCREW(+) / M3 X 6 CRFREE S-T			
	102	5MBTPB3008PW++R	B1A63080	BIND T.T SCREW(+) / M3 X 8 CRFREE P-T			
	103	B1B04200		+BIND SCREW M4X20(TRIVALENT CHROMATI			
	104	5MBTPB4010TW++R	B1A54100	BIND T.T SCREW(+) / M4 X 10 CRFREE S-T			

- Parts with "•" are component parts or sub-assemblies of the assembly appearing immediately above them.
- Parts with "⊙" indicate regular maintenance parts.
- Parts with "• •" are component parts or sub-assembly with "•" appearing immediately above them.

Key Counter

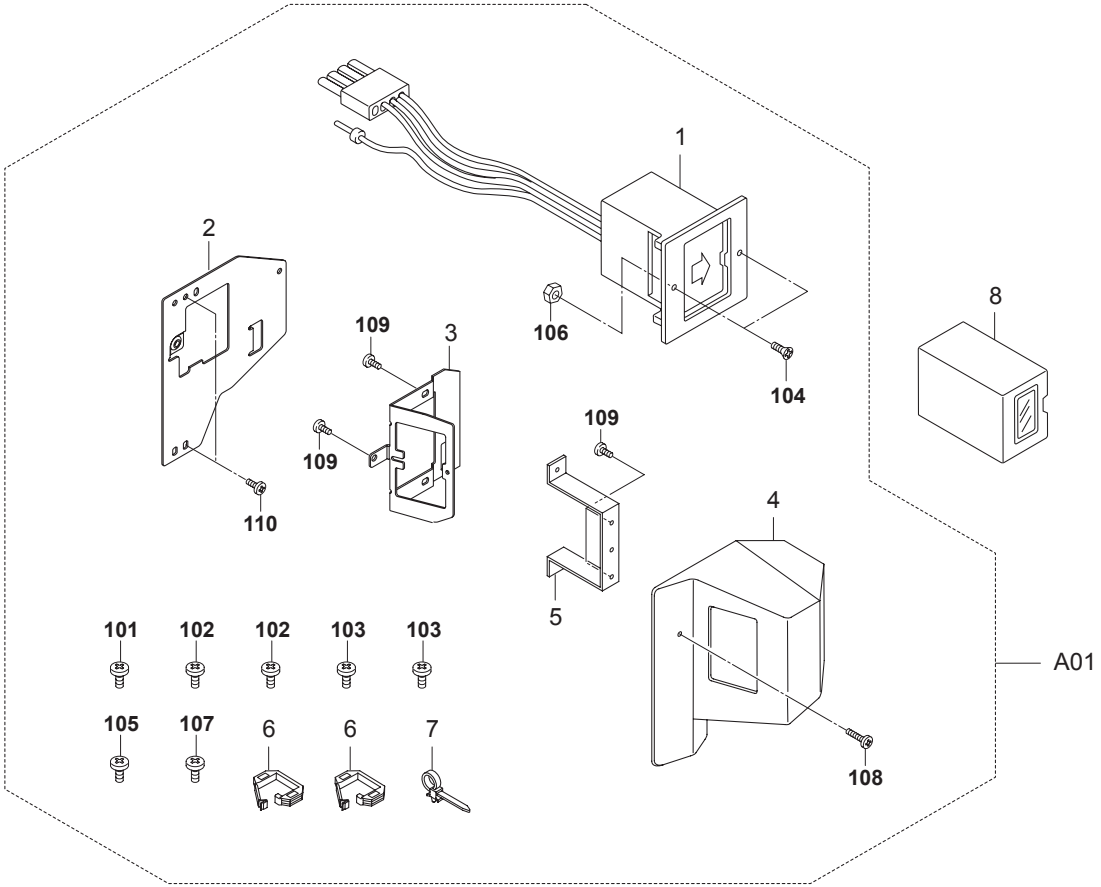

Tools

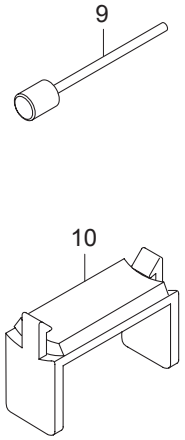

FIG. 26 Options 3 & Tools

	Ref. No.	Part.No.	Alternative.	Description	Quantity 120	230	240
⊙	A01	302A369708	2A369708	SET PARTS KEYCOUNTER NEW COLOR	1	1	1
	1	•3029236241	29236241	SOCKET ASS'Y,KEY COUNTER	1	1	1
	2	•302GR03010	2GR03010	RETAINER KEY COUNTER COVER	1	1	1
	3	•302GR03020	2GR03020	RETAINER KEY COUNTER	1	1	1
	4	•3066060011	66060011	COVER,KEY COUNTER	1	1	1
	5	•3066060041	66060041	MOUNT,KEY COUNTER	1	1	1
	6	•7YZM210006++H01	YZ038000	ACCESS.EDGING	2	2	2
	7	•M21AH010		BAND,RSG-130-V0(KITAGAWA)	1	1	1
⊙	8	3025418011	25418011	KEY COUNTER	1	1	1
	9	35968110		STOPPER WIRE ASS'Y SP	2	2	2
	10	302C968310	2C968310	MIRROR FRAME RETAINING SP	2	2	2

Ref. No.	Part.No.	Alternative.	Description	Quantity 120	230	240
101	5MBTPB3008PW++R	B1A63080	BIND T.T SCREW(+) / M3 X 8 CRFREE P-T			
102	5MBTPB4010PW++R	B1A64100	BIND T.T SCREW(+) / M4 X 10 CRFREE P-T			
103	5MBTPB4010TW++R	B1A54100	BIND T.T SCREW(+) / M4 X 10 CRFREE S-T			
104	7BB003306H	BB040750	+COUNTER-SUNK HEAD SCREW M3X6 CRFRE			
105	7BB100420H	BB040740	+BIND TAP-TITE S SCREW M4X20 CRFREE			
106	7BC1003055++H01	BC018230	HEXA NUT M3			
107	B1B03080		+BIND SCREW M3X08			
108	B1B54300		+BIND TAP-TITE S SCREW M4X30(TRIVALENT C			
109	B4A04060		+TP-A SCREW M4X06(TRIVALENT CHROMATIN			
110	B4A04100		+TP-A SCREW M4X10(TRIVALENT CHROMATIN			

- Parts with "•" are component parts or sub-assemblies of the assembly appearing immediately above them.
- Parts with "⊙" indicate regular maintenance parts.
- Parts with "• •" are component parts or sub-assembly with "•" appearing immediately above them.

FIG. 27 Maintenance Kits

	Ref. No.	Part.No.	Alternative.	Description	Quantity 120	230	240
		1702H07US0	072H07US	MK-670/MAINTENANCE KIT (OPTION)	1		
				•PULLEY,PAPER FEED	2		
				•PULLEY,SEPARATION	3		
				•PULLEY FEED A	3		
				•PARTS,DV-420,SP	1		
				•FILTER OZONE A	3		
				•FILTER OZONE B	1		
				•PARTS DK-670	1		
				•PARTS FK-670(U)	1		
				•PARTS TR-670	1		
				•PARTS HOLDER FILTER A SP	1		
				•UPPER PULLEY,BYPASS	1		
		1702H08NL0	072H08NL	MK-670/MAINTENANCE KIT (OPTION)		1	1
				•PULLEY,PAPER FEED		2	2
				•PULLEY,SEPARATION		3	3
				•PULLEY FEED A		3	3
				•PARTS,DV-420,SP		1	1
				•FILTER OZONE A		3	3
				•FILTER OZONE B		1	1
				•PARTS DK-670		1	1
				•PARTS FK-670(E)		1	1
				•PARTS TR-670		1	1
				•PARTS HOLDER FILTER A SP		1	1
				•UPPER PULLEY,BYPASS		1	1

- Parts with "•" are component parts or sub-assemblies of the assembly appearing immediately above them.
- Parts with "⊙" indicate regular maintenance parts.
- Parts with "• •" are component parts or sub-assembly with "•" appearing immediately above them.

	Part.No.	Alternative.	Description	Fig.No.
	1702H00UN0	072H00UN	AK-670/ATTACHMENT KIT	25
	1702H07US0	072H07US	MK-670/MAINTENANCE KIT	27
	1702H08NL0	072H08NL	MK-670/MAINTENANCE KIT	27
	20305130		LABEL L,HIGH TEMPERATURE CAUTION(EXP)	5
⊙	29415100	45729416	GEAR,TONER ROLLER	6
	29812291		CUSHION,CONTACT GLASS	10
⊙	2A068240		WIRE,MAIN CHARGER	12
	2A612800		COVER,PLATEN	24
	2A612810		MAT,ORIGINAL HOLDER	24
	2A612820		HINGE,ORIGINAL HOLDER	24
⊙	2AR07220		PULLEY,PAPER FEED	5
⊙	2AR07230		PULLEY,SEPARATION	5,6
	2AR07660		GUIDE FILM,SEPARATION PULLEY	5
	2AR27800		POWER CORD(230)	21
⊙	2AV12160		MIRROR B	10
⊙	2BC06510		BUSHING 8	6,9,18
	2BC06520		BUSHING 6,REGISTRATION	5
	2BC06910		STOPPER 6	2,5,6,9,16
	2BC06980		STOPPER 5	4,6,9,10,18
	2BC12190		SPRING,MIRROR HOLDER	10
	2BG12430		STUD SCREW SC	25
	2BG22990		CUT WASHER 4	8
⊙	2BJ06010		PULLEY FEED A	5,6
	2BJ25240		BARRIER TABLET	23
	2BJ25270		SPONGE LCD A	23
	2BJ25280		SPONGE LCD B	23
	2BJ25400		SHEET LCD A	23
	2BL02150		MOUNT RIGHT HANDLE	2
⊙	2BL04310		PLATE NUMBER	3
⊙	2BL04370		PLATE NUMBER 2	3
	2BL05150		LABEL RADIATION	22
⊙	2BL06320		BELT CONVEYING	4
	2BL06330		GUIDE B FEED	4
	2BL06600		COVER BYPASSTRAY	6
	2BL06650		STAY LIFTPLATE	6
	2BL06680		CAM BYPASS	6
	2BL06690		MOUNT BYPASSDRIVE	6
⊙	2BL06720		GEAR 55/15	6
	2BL06730		ACTUATOR BYPASSFEED	7
	2BL06830		DIAL BYPASSFEED	7
	2BL06850		JOINT RETARD	6
	2BL06870		SPRING JOINTRETARD	6
	2BL06880		FILM BYPASS	6
	2BL06890		PLATE BYPASS HOLD	6
	2BL06990		STOPPER GEAR 8-25	6
	2BL07860		SPRING BYPASS	6
	2BL07900		PLATE LEADING FEED	5
	2BL07910		SUPPORT PLATE FEED	5
	2BL07990		SPRING SEPARATION	5
⊙	2BL16220	5AAVBRUSH036	BRUSH CLEANER	22

	Part.No.	Alternative.	Description	Fig.No.
	2BL21450		PULLEY EXIT B	20
	2BL21510		CUT WASHER 6	16
⊙	2BL22350		BELT DRIVE FEED	15
⊙	2BL22550		GEAR Z40S-Z32S	15
⊙	2BL22580		COLLAR BELT	15
⊙	2C901060		PCB EJECT SW ASSY	20
⊙	2C901170		DISPOSAL SENSOR ASSY	12
	2C902080		SPRING DEV PUSH	2
	2C902170		LEVER DEV PUSH	2
	2C902590		SPRING DEV PUSH F	2
	2C904340		SPRING LEFT INTERLOCK	19
	2C904350		SPRING LEFT HOOK	19
	2C904550		CUT WASHER 5	3,15,20,25
⊙	2C905160		LABEL GLASS CAUTION	10
⊙	2C907130		GEAR Z15 REGIST	9
	2C912150		RETAINER WIRE	10
	2C912220		MOUNT PI	10
⊙	2C912250		CONTACT GLASS	11
⊙	2C912310		GEAR Z18/39	10
⊙	2C912320		GEAR Z36	10
⊙	2C912340		DRUM PULLEY	10
	2C912350		WIRE SCANNER BLACK	10
	2C912360		WIRE SCANNER GRAY	10
	2C912420		HOLDER GLASS DF	11
⊙	2C912430		LID KMAS	1
⊙	2C912440		LABEL SIZE (METRIC)	11
⊙	2C912450		LABEL SIZE (INCH)	11
⊙	2C912600		FRONT SIZE INDICATOR	11
	2C912610		MOUNT RELEASE SWITCH	10
	2C912620		GUIDE RELEASE SWITCH	10
	2C912630		STOPPER RELEASE SWITCH	24
	2C912640		SHAFT RELEASE SWITCH	10
	2C912650		SPRING RELEASE SWITCH	10
	2C912670		SHIELD SCANNER FRAME	10
⊙	2C912700		SPONGE ORIGINAL SIZE	11
	2C912710		SHIELD SCANNER FRAME B	10
⊙	2C916070		LEVER CONVEYING REAR	9
⊙	2C916080		STOPPER BUSH REG	9
	2C916090		GUIDE CONVEYING	9
⊙	2C916180		GEAR Z15 REGIST	9
	2C916250		COLLAR REGIST	9
⊙	2C916260		BUSH REGIST	9
⊙	2C917070		HOUSING STA ELIMINATION	9
⊙	2C917100		BUSH TRANSFER	9
⊙	2C917110		COLLAR TRANS	9
	2C917180		BUSH TRANS ROLL F	9
	2C918360		SPRING DETECTION	12
⊙	2C920180		GEAR FUSER Z28	14
	2C920320		SEAL DISCHAGER	14
⊙	2C920330		BEARING PRESSURE	14

• Parts with "⊙" indicate regular maintenance parts.

	Part.No.	Alternative.	Description	Fig.No.
⊙	2C921120		GEAR 23 EXIT	20
	2C921290		SPRING LINK	20
	2C921400		SHOULDER SCREW EXIT	19
⊙	2C922080		GEAR 60	16
⊙	2C922150		GEAR 26 DEV	15
	2C922170		COUPLING CONT P	16
⊙	2C922230		GEAR 29 FIX JOINT	15
	2C922260		SPRING CONT P	16
⊙	2C927020		MOTOR EJECT	20
⊙	2C927070		FAN COOLING 80-25	17
⊙	2C927210		SENSOR 248NL1	6,7,8,10
⊙	2CX82010		SET,PLATEN COVER TYPE D	24
⊙	2DA25290		KEY MANAGEMENT	23
⊙	2DA25350		KEY OPERATION 10	23
⊙	2DA27020		FAN COOLING 50-10	9
	2DC12230		SLIDER SCANNER	10
⊙	2DC25070		KEY RESET	23
	2FB06710		PIN CASSETTE RAIL	2
	2FB07050		PIN CURSOR	3
	2FB07060		SPRING CURSOR	3
⊙	2FB17260		BELT FEED HANDLE	20
	2FB20860		PIN FUSER COVER	6
⊙	2FB24150		KEY FUNCTION J	23
⊙	2FB27160		INTER LOCK SWITCH	22
⊙	2FG01020		SIZE DETECTION ASS'Y	3,6
	2FG06070		SPRING FEED JOINT	4
⊙	2FG06110		PULLEY MIDDLE FEED	8
	2FM04150	5MVM163DN005	CAP SPRING /B-11 ENCLOSURE A4	19,20
	2FT02140		SPRING SHUTTER B	23
	2FT02200		RAIL DLP	2
	2FT10040		GRID	12
⊙	2FT17020		GEAR TRANSFER	9
	2FT17030		PLATE STA ELIMINATION	9
⊙	2FT22160		BEARING 6-15-17	15
	3019527401	19527401	POWER CORD(120)	21
⊙	3025418011	25418011	KEY COUNTER	26
	3029236241	29236241	SOCKET ASS'Y,KEY COUNTER	26
	3029927232	29927232	POWER CODE AS(240)	21
⊙	302A369708	2A369708	SET PARTS KEYCOUNTER NEW COLOR	26
	302AR07041	2AR07041	SHAFT,WORK PLATE	3
	302AR07251	2AR07251	SHAFT,PAPER FEED	5
	302AR07261	2AR07261	SHAFT,SEPARATION	5
	302AR07271	2AR07271	SHAFT,LEADING FEED	5
⊙	302BC07861	2BC07861	TERMINAL,PAPER SIZE DETECTION	3,6
⊙	302BL04301	2BL04301	LID COVER LEFT	1
	302BL06531	2BL06531	COVER BYPASSUNIT	6
	302BL06751	2BL06751	SHAFT RETARD	6
	302BL06761	2BL06761	SHAFT BYPASSCAM	6
	302BL06771	2BL06771	SHAFT BYPASS	6
	302C912131	2C912131	ADJUSTING PLATE B	10

	Part.No.	Alternative.	Description	Fig.No.
	302C912291	2C912291	SPRING SCANNER TENSION	10
	302C912302	2C912302	MOTOR PLATE SCANNER	10
	302C968310	2C968310	MIRROR FRAME RETAINING SP	26
	302DA12070	2DA12070	SEAL SCANNER	2
⊙	302DA25031	2DA25031	KEY SAVER	23
	302DA26560	2DA26560	FILM SHIELD FFC	21
	302DC05120	2DC05120	LABEL CAUTION HG	1
⊙	302F725070	2F725070	BUSH HEAT R	14
⊙	302F725080	2F725080	BUSH HEAT L	14
⊙	302F725430	2F725430	STATIC ELIMINATOR HEAT ROLLER	14
⊙	302F845040	2F845040	R/W MODULE 26X45	17
⊙	302F925430	2F925430	THERMISTOR ASSY	14
⊙	302FB05200	2FB05200	PLATE SIZE C	3
⊙	302FB05210	2FB05210	PLATE SIZE IN	3
⊙	302FB05441	2FB05441	LABEL VFEED CAUTION	19
	302FB07032	2FB07032	LEVER CURSOR A	3
	302FB07042	2FB07042	LEVER CURSOR B	3
	302FB07420	2FB07420	PIN CASSETTE	3
	302FB11160	2FB11160	BEARING MF128ZZ	10
	302FB24250	2FB24250	RETAINER LCD	23
⊙	302FB24470	2FB24470	KEY VOLUME	23
⊙	302FB25052	2FB25052	HEATER DEHUMIDIFIER 120	5
⊙	302FB25061	2FB25061	HEATER DEHUMIDIFIER 240	5
	302FB25190	2FB25190	TABLET OPERATION	23
	302FB26290	2FB26290	LID VENDOR	21
⊙	302FG07020	2FG07020	PULLEY,CASSETTE RAIL	2
	302FG07033	2FG07033	LEFT RAIL CASSETTE	2
	302FG07070	2FG07070	BUSHING,PRIMARY PAPER FEED	5
	302FG07251	2FG07251	UPPER HOUSING,PAPER FEED	5
	302FG07260	2FG07260	LOWER HOUSING,PAPER FEED	5
	302FG07271	2FG07271	WEIGHT,LEADING FEED PULLEY	5
	302FG07290	2FG07290	ACTUATOR,PAPER EMPTY	5
	302FG07300	2FG07300	HOLDER,ACTUATOR	5
	302FG07310	2FG07310	REINFORCEMENT PRIMARY PAPER FEED	5
	302FG07320	2FG07320	STOPPER,SUPPORT PLATE	5
	302FG07330	2FG07330	GROUND PLATE,PRIMARY PAPER FEED	5
	302FT20101	2FT20101	COVER PCB FIXING	14
	302FT22200	2FT22200	SPACER COUPLING	15
	302FT22250	2FT22250	COUPLING DRUM 2	15
⊙	302FT93052	2FT93052	PARTS,DV-420,SP	13
	302FZ03070	2FZ03070	RETAINING PIN DRAWER	5
⊙	302FZ05020	2FZ05020	KEY INIT	23
	302FZ05190	2FZ05190	SPRING EARTH KEYTOP	23
⊙	302FZ09141	2FZ09141	LABEL PAPER SIZE R1	3
	302FZ32070	2FZ32070	COUPLING PAPER FEED	5
⊙	302G634070	2G634070	LABEL ENERGY STAR	1
⊙	302GJ25560	2GJ25560	THERMISTOR FUSER	14
	302GR02221	2GR02221	LEVER LOCK CASSETTE	2
	302GR02230	2GR02230	SPRING LEVER	2
	302GR02240	2GR02240	PIN FRONT CASSETTE RAIL	2

• Parts with "⊙" indicate regular maintenance parts.

	Part.No.	Alternative.	Description	Fig.No.
	302GR02340	2GR02340	RIGHT HANDLE MACHINE	2
	302GR02350	2GR02350	HANDLE MACHINE	2
	302GR03010	2GR03010	RETAINER KEY COUNTER COVER	26
	302GR03020	2GR03020	RETAINER KEY COUNTER	26
	302GR04140	2GR04140	EMBLEM LOGO	1
⊙	302GR04250	2GR04250	COVER OZONE	1
⊙	302GR04340	2GR04340	SEAL EMBLEM	1
	302GR04370	2GR04370	MAGNET CLIP DISH	1
⊙	302GR04380	2GR04380	SEAL MAGNET	1
	302GR05070	2GR05070	HANDLE OPE	23
	302GR05080	2GR05080	CUSHION HANDLE A	23
	302GR05090	2GR05090	BUSH PIN OPE	23
	302GR05120	2GR05120	MOUNT SLIDE	23
	302GR06201	2GR06201	LEVER SEPARATION RELEASE	5
	302GR06230	2GR06230	PLATE GUIDE FEED	5
	302GR06240	2GR06240	TAPE VHB	5
	302GR08011	2GR08011	BASE BYPASS	6
	302GR08021	2GR08021	PLATE LIFT BYPASS	6
	302GR08030	2GR08030	COVER CURSOR	6
	302GR08040	2GR08040	FRONT CURSOR BYPASS	6
	302GR08050	2GR08050	REAR CURSOR BYPASS	6
	302GR08060	2GR08060	MOUNT SIZE PWB	6
	302GR08071	2GR08071	RACK CURSOR	6
⊙	302GR08080	2GR08080	TABLE BYPASS	6
	302GR09051	2GR09051	LEVER CASSETTE	3
	302GR09060	2GR09060	RAIL CURSOR R	3
	302GR09070	2GR09070	LID PAPER SIZE	3
	302GR09082	2GR09082	RAIL CURSOR A	3
	302GR09090	2GR09090	SUPPORT PLATE	3
	302GR09120	2GR09120	SPRING LEVER CASSETTE	3
	302GR09130	2GR09130	SHAFT PULLEY	3
	302GR09140	2GR09140	SHAFT HANDLE	3
⊙	302GR09150	2GR09150	WORK PLATE HANDLE	3
	302GR09160	2GR09160	STOPPER PAPER	3
⊙	302GR09201	2GR09201	PLATE SIZE INCH	3
	302GR09210	2GR09210	SEAL DETECTION PLATE	3
	302GR09220	2GR09220	PIN CURSOR	3
	302GR09250	2GR09250	FILM PWB COVER	3
	302GR09991	2GR09991	LIFT LOCK	3
	302GR17180	2GR17180	PIN SCANNER RETAINING	11
	302GR17400	2GR17400	FILM LAMP	10
	302GR17820	2GR17820	PULLEY SCANNER	10
	302GR22110	2GR22110	COLLAR TRANS ROLLER	8,9
⊙	302GR34022	2GR34022	LABEL PAPER SIZE	3
	302GR34050	2GR34050	LABEL JAM A1	7
	302GR34060	2GR34060	LABEL JAM A2	7
	302GR34070	2GR34070	LABEL JAM A3	7
	302GR34091	2GR34091	LABEL SET PAPER CAUTION A	6
	302GR34102	2GR34102	LABEL SET PAPER CAUTION E	6
	302GR34111	2GR34111	LABEL SET PAPER CAUTION J	6

	Part.No.	Alternative.	Description	Fig.No.
	302GR34122	2GR34122	LABEL BYPASS SIZE	6
	302GR34260	2GR34260	LABEL SET PAPER CAUTION	6
	302GR34411	2GR34411	LABEL SET PAPER CAUTION TW	6
	302GR39190	2GR39190	COVER CONN	22
⊙	302GR44050	2GR44050	FAN CONTROLLER 80-15	21
⊙	302GR44112	2GR44112	MOTOR LIFT	5
⊙	302GR44120	2GR44120	CLUTCH FEED	6
⊙	302GR44131	2GR44131	CLUTCH FEED B	6
⊙	302GR44160	2GR44160	SOLENOID FEED SHIFT	20
	302GR46160	2GR46160	WIRE FINISHER SOCKET	21
	302GR46230	2GR46230	WIRE BYPASS UNIT	6
	302GR46270	2GR46270	WIRE BYPASS TRAY	6
	302GR46430	2GR46430	WIRE PRIMARY FEED UNIT1	5
	302GR46450	2GR46450	WIRE CASSETTE UNIT	3
	302GR46590	2GR46590	WIRE RFID	17
	302H000010	2H000010	SCANNER FRAME ASSY	10
⊙	302H001170	2H001170	CONT SENSOR ASS'Y	17
	302H002040	2H002040	SPACER LSU	2
	302H002050	2H002050	LOWER PLATE MPF	2
	302H002060	2H002060	LOWER PLATE LSU	2
	302H002070	2H002070	UPPER PLATE DRUM	2
	302H002080	2H002080	LOWER PLATE DLP	2
	302H002090	2H002090	PLATE FUSER GUIDE	2
	302H002100	2H002100	PLATE FRONT LEFT	2
	302H002110	2H002110	SPACER DRUM	2
	302H002120	2H002120	MOUNT HANDLE FRONT LEFT	2
	302H002130	2H002130	PLATE POSITION A	2
	302H002140	2H002140	PLATE POSITION B	2
	302H002150	2H002150	PLATE EXIT FRONT	2
	302H002160	2H002160	BASE SCANNER UNIT	2
	302H002180	2H002180	MOUNT SCANNER UNIT L	2
	302H002190	2H002190	PLATE RIGHT TOP	2
	302H002200	2H002200	PLATE RIGHT MIDDLE	2
	302H002210	2H002210	PLATE POSITION C	2
	302H002220	2H002220	HOLDER DLP RAIL	2
	302H002230	2H002230	PLATE POSITION D	2
	302H002250	2H002250	RUBBER BASE	2
	302H002260	2H002260	SHIELD HEATER DRUM	22
	302H002270	2H002270	COVER LSU LOW	1
	302H002280	2H002280	SPRING ISU LOW	2
	302H002290	2H002290	FILM PROTECT A	21
	302H002300	2H002300	FILM PROTECT B	2
	302H002310	2H002310	ADJUSTOR SCANNER	2
	302H002320	2H002320	MOUNT RUBBER SCANNER	2
	302H002330	2H002330	LOWER LEFT REINFORCE	2
	302H002340	2H002340	LOWER RIGHT REINFORCEMENT	2
	302H002350	2H002350	MOUNT REAR COVER A	2
	302H002360	2H002360	GROUND SCANNER	2
	302H002370	2H002370	SHIELD LSU LOW	2
	302H002380	2H002380	SHIELD SCREW	2,10,15,21

• Parts with "⊙" indicate regular maintenance parts.

	Part.No.	Alternative.	Description	Fig.No.
⊙	302H004010	2H004010	COVER FRONT	1
⊙	302H004040	2H004040	COVER FRONT RIGHT	1
⊙	302H004060	2H004060	COVER TRAY	1
⊙	302H004070	2H004070	COVER TRAY REAR	1
⊙	302H004080	2H004080	COVER TRAY RIGHT	1
⊙	302H004090	2H004090	COVER EJECT UPPER	1
⊙	302H004110	2H004110	COVER LEFT FRONT	1
⊙	302H004120	2H004120	COVER LEFT REAR	1
⊙	302H004130	2H004130	COVER LEFT MIDDLE	1
⊙	302H004150	2H004150	COVER RIGHT MIDDLE	1
⊙	302H004160	2H004160	COVER OPE LOW	1
⊙	302H004170	2H004170	COVER ISU FRONT	11
⊙	302H004180	2H004180	COVER ISU LEFT	11
⊙	302H004190	2H004190	COVER ISU RIGHT	11
⊙	302H004200	2H004200	COVER ISU REAR	11
	302H004210	2H004210	COVER INNER LOW	22
	302H004220	2H004220	COVER BASE DISH	1
⊙	302H004230	2H004230	CLIP DISH	1
⊙	302H004240	2H004240	COVER MAIN SW	1
	302H004260	2H004260	MOUNT COVER HINGE A	2
	302H004270	2H004270	HINGE FRONT COVER A	1
	302H004280	2H004280	PIN HINGE A	1
	302H004290	2H004290	MOUNT COVER HINGE B	2
	302H004300	2H004300	HINGE FRONT COVER B	1
	302H004310	2H004310	PIN HINGE B	1
	302H004320	2H004320	MOUNT INTERLOCK SW	22
	302H004330	2H004330	MOUNT SPEAKER	22
	302H004340	2H004340	STRAP LEFT COVER	19
	302H004380	2H004380	HOOK LEFT COVER F	19
	302H004390	2H004390	HOOK LEFT COVER R	19
	302H004400	2H004400	JUNCTION PLATE HOOK	19
	302H004410	2H004410	SHAFT HOOK	19
	302H004420	2H004420	GUIDE LEFT COVER	19
	302H004430	2H004430	PIN LEFT COVER HOOK F	19
	302H004450	2H004450	MOUNT LEFT INTERLOCK SW	19
	302H004460	2H004460	ARM LEFT INTERLOCK SW	19
	302H004470	2H004470	LEFT COVER MIDDLE	19
	302H004490	2H004490	MOUNT STRAP F	19
	302H004500	2H004500	MOUNT STRAP R	19
	302H004510	2H004510	PLATE LEFT COVER MIDDLE	19
	302H004520	2H004520	COVER INNER TOP	22
	302H004530	2H004530	LEVER CONT RELEASE	22
	302H004540	2H004540	SPRING CONT RELEASE	22
⊙	302H004550	2H004550	CAP MOUNT DP	11
	302H004560	2H004560	STOPPER PAPER	1
	302H004570	2H004570	MOUNT REAR COVER L	1
	302H004580	2H004580	MOUNT REAR COVER R	1
	302H004600	2H004600	MOUNT REAR DUCT	1
⊙	302H004610	2H004610	COVER LEFT SEPARATE	19
⊙	302H004620	2H004620	COVER OZONE FILTER	19

	Part.No.	Alternative.	Description	Fig.No.
	302H004630	2H004630	PLATE LEFT COVER LOW	19
	302H004640	2H004640	PLATE EARTH LEFT COVER	19
	302H004650	2H004650	HOLDER SWITCH	1
⊙	302H004660	2H004660	MAGNET CATCH	1
⊙	302H004670	2H004670	PLATE EARTH LEFT COVER B	19
⊙	302H004690	2H004690	COVER CASS HEATER	1
	302H004710	2H004710	GUIDE WIRE FRONT	12
⊙	302H004720	2H004720	SUPPORT COVER LEFT	2
	302H004760	2H004760	LID INNER COVER	22
⊙	302H004770	2H004770	COVER FRONT LEFT LOW	1
⊙	302H004780	2H004780	COVER FRONT LEFT MIDDLE	1
	302H005030	2H005030	BASE OPERATION	23
	302H005040	2H005040	MOUNT HANDLE OPE	23
	302H005050	2H005050	HINGE OPE LEFT	23
	302H005060	2H005060	HINGE OPE RIGHT	23
	302H005070	2H005070	SPRING HINGE OPE L	23
	302H005080	2H005080	SPRING HINGE OPE R	23
	302H005120	2H005120	COVER OPE REAR	23
	302H005310	2H005310	LENS KEY B	23
	302H005320	2H005320	MOUNT SLIDE LEFT	23
	302H005340	2H005340	BUSH SLIDE OPE	23
	302H005350	2H005350	PIN HINGE OPE	23
	302H005360	2H005360	PLATE GROUND BASE OPE	23
	302H005370	2H005370	PLATE GROUND MOUNT OPE	23
	302H006010	2H006010	FRAME VERTICAL FEED	4
	302H006040	2H006040	GUIDE VERTICAL	4
	302H006050	2H006050	PLATE VERTICAL DRIVE	4
⊙	302H006080	2H006080	GEAR Z31S-P18 FEED	4
	302H006090	2H006090	SPRING GUIDE VERTICAL	4
⊙	302H006100	2H006100	GEAR Z30S VERTICAL IDLE	4
⊙	302H006110	2H006110	GEAR Z20S JOINT FEED A	4
⊙	302H006120	2H006120	GEAR Z20S JOINT FEED B	4
	302H006130	2H006130	PLATE FEED DRIVE	15
	302H006140	2H006140	BRACKET GEAR JOINT FEED	5
⊙	302H006150	2H006150	GEAR Z22S FEED	15
⊙	302H006160	2H006160	GEAR Z21S-Z28S FEED	15
⊙	302H006170	2H006170	GEAR Z34S-Z23S FEED	15
⊙	302H006180	2H006180	GEAR Z25S FEED C	5
	302H006190	2H006190	SHAFT PRIMARY FEED	5
	302H006200	2H006200	STRAP VERTICAL COVER	4
⊙	302H006210	2H006210	COVER LEFT FEED	4
⊙	302H006230	2H006230	GEAR Z25S FEED CLUTCH	15
	302H006240	2H006240	HOLDER FEED CLUTCH	5
⊙	302H006250	2H006250	GEAR Z60S FEED	15
	302H006260	2H006260	PLATE MPF DRIVE A	15
⊙	302H006270	2H006270	GEAR Z41S FEED	15
	302H006280	2H006280	PLATE MPF DRIVE B	15
	302H006300	2H006300	HOLDER FEED SWITCH	4,18
⊙	302H006310	2H006310	GEAR Z60S-Z35S FEED	15
⊙	302H006320	2H006320	GEAR Z41S-P30 FEED	15

• Parts with "⊙" indicate regular maintenance parts.

	Part.No.	Alternative.	Description	Fig.No.
	302H006340	2H006340	MOUNT FEED DRAWER	5
	302H006350	2H006350	SPRING FEED	4
	302H006360	2H006360	SPRING EARTH SW	4
	302H006370	2H006370	MOUNT CASSETTE SWITCH	5
	302H006380	2H006380	COVER VERTICAL INNER	4
	302H006390	2H006390	PLATE VERTICAL JOINT A	4
	302H006400	2H006400	PIN VERTICAL	4
	302H006410	2H006410	PLATE EARTH VERTICAL	4
	302H006420	2H006420	SPRING COVER HOOK	4
	302H006430	2H006430	SPRING EARTH PI	4
	302H008010	2H008010	GUIDE MPF FEED	7
	302H008020	2H008020	BASE MPF FEED	7
	302H008050	2H008050	GROUND PLATE MPF	7
	302H008080	2H008080	RAIL MPF FEED	7
	302H008090	2H008090	PULLEY RAIL MPF FEED	7
	302H008140	2H008140	SPRING BYPASSFFED	7
	302H008170	2H008170	COLLER MPF	7
	302H008180	2H008180	CUT WASHER MPF 5	7
	302H008200	2H008200	SHAFT MPF FEED SIDE	7
⊙	302H008220	2H008220	PULLEY 15 MPF FEED	7
	302H008240	2H008240	SPRING BYPASS	7
⊙	302H008250	2H008250	PULLEY MPF Z25	7
⊙	302H008260	2H008260	GEAR MPF Z30	7
	302H008280	2H008280	SPRING BYPASSFEED 2	7
	302H008290	2H008290	SPRING RETARD	6
	302H008320	2H008320	STAY MPF	7
	302H008330	2H008330	CUSHION MPF	6
	302H008420	2H008420	STAY GUIDE MPF UPPER	7
	302H009010	2H009010	CASSETTE	3
⊙	302H009020	2H009020	COVER CASSETTE	3
⊙	302H009030	2H009030	COVER CASSETTE HANDLE	3
	302H009040	2H009040	HANDLE CASSETTE	3
	302H009050	2H009050	JOINT HANDLE CASSETTE	3
	302H009060	2H009060	ADJUSTING PLATE CASSETTE	3
	302H009070	2H009070	WORK PLATE LIFT CASSETTE	3
	302H009080	2H009080	FRONT CURSOR CASSETTE	3
	302H009090	2H009090	REAR CURSOR CASSETTE	3
	302H009100	2H009100	BASE CASSETTE	3
	302H009110	2H009110	CURSOR C CASSETTE	3
	302H009120	2H009120	PLATE CASSETTE EARTH	3
	302H012010	2H012010	GUIDE DRUM SHUTTER	12
	302H012020	2H012020	LEFT HOLDER SHEET	12
	302H012030	2H012030	RIGHT HOLDER SHEET	12
	302H012040	2H012040	SPRING DRUM SHUTTER	12
	302H012050	2H012050	STRAP DRUM SHUTTER	12
	302H012060	2H012060	FRONT ARM DRUM SHUTTER	12
	302H012070	2H012070	REAR ARM DRUM SHUTTER	12
	302H012080	2H012080	SHEET DRUM SHUTTER	12
	302H012090	2H012090	FRONT RAIL DRUM SHUTTER	12
	302H012100	2H012100	REAR RAIL DRUM SHUTTER	12

	Part.No.	Alternative.	Description	Fig.No.
	302H012110	2H012110	FRONT RAIL LINK ARM	12
	302H012120	2H012120	REAR RAIL LINK ARM	12
	302H012130	2H012130	GUIDE STRAP	12
	302H012170	2H012170	HOLDER SENSOR	12
	302H012180	2H012180	DETECTION PLATE	12
	302H012330	2H012330	SEAL WIRE A	12
⊙	302H014070	2H014070	GEAR HOPPER MOTOR	13
⊙	302H014080	2H014080	GEAR Z50S HOPPER	13
⊙	302H014180	2H014180	GUIDE MIDDLE HOPPER	2
	302H014190	2H014190	COVER WIRE HOPPER	13
	302H017050	2H017050	MIRROR FRAME A	10
	302H017060	2H017060	MIRROR FRAME B	10
	302H017070	2H017070	GUIDE LAMP WIRE A	10
	302H017080	2H017080	GUIDE LAMP WIRE B	10
	302H017090	2H017090	GUIDE LAMP WIRE C	10
	302H017100	2H017100	REFLECTOR SCANNER	10
	302H017120	2H017120	PULLEY LEFT FRAME	10
	302H017130	2H017130	MOUNT PULLEY	10
	302H017140	2H017140	MOUNT INVERTER	10
	302H017150	2H017150	MIRROR A	10
⊙	302H017160	2H017160	LEFT SIZE INDICATOR	11
	302H017170	2H017170	MOUNT DF	10
	302H017180	2H017180	PULLEY SCANNER	10
	302H017190	2H017190	SHAFT DRIVE	10
	302H017200	2H017200	PLATE SHADING	11
	302H017210	2H017210	GUIDE CCD WIRE	10
⊙	302H017220	2H017220	CONTACT GLASS DP	11
	302H017230	2H017230	LID GUIDE WIRE C	10
	302H017250	2H017250	TAPE REFLECTOR	10
⊙	302H017260	2H017260	BELT SCANNER	10
	302H017290	2H017290	SPRING SCANNER A	10
	302H017300	2H017300	SPRING SCANNER B	10
	302H017310	2H017310	GROUND SCANNER REAR	10
	302H017320	2H017320	GROUND SCANNER FRONT	10
	302H017330	2H017330	HOLDER CCD WIRE	10
⊙	302H017340	2H017340	REAR SIZE INDICATOR (M)	11
⊙	302H017350	2H017350	REAR SIZE INDICATOR (I)	11
	302H017360	2H017360	GROUND ISU COVER	10
	302H017370	2H017370	GROUND FFC	10
	302H017600	2H017600	COVER ISU	10
	302H019020	2H019020	COVER LSU	11
⊙	302H022010	2H022010	ROLLER TRANSFER	9
	302H022020	2H022020	GUIDE TRANS LEFT	9
	302H022030	2H022030	GUIDE TRANS RIGHT	9
	302H022040	2H022040	TERMINAL PLATE TRANS	9
	302H022050	2H022050	TERMINAL PLATE STA	9
	302H022070	2H022070	SPRING TRANS ROLL F	9
	302H022080	2H022080	SPRING TRANS ROLL R	9
	302H022090	2H022090	SPRING TRANS GUIDE	9
	302H022100	2H022100	BUSH TRANS GUIDE	9

• Parts with "⊙" indicate regular maintenance parts.

	Part.No.	Alternative.	Description	Fig.No.
	302H022110	2H022110	SHEET TRANS GUIDE LEFT	9
	302H022120	2H022120	SHEET TRANS GUIDE RIGHT	9
	302H022130	2H022130	HOLDER SPRING TRANS	9
⊙	302H022140	2H022140	REINFORCEMENT TRANS	9
⊙	302H024020	2H024020	ROLLER REGIST RIGHT	9
	302H024040	2H024040	FRAME CONVEYING	9
	302H024050	2H024050	BASE MID FEED LOW	8
	302H024060	2H024060	BASE MID FEED UPPER	8
	302H024070	2H024070	GUIDE MID FEED	8
	302H024080	2H024080	PLATE MID FEED	8
	302H024090	2H024090	SHAFT MID FEED	4,9,18
	302H024100	2H024100	SPRING ACTUATOR	8
⊙	302H024110	2H024110	GEAR FEED Z29S	8
⊙	302H024120	2H024120	GEAR FEED Z36SZ24S	8
	302H024130	2H024130	ACTUATOR MID FEED	8
	302H024140	2H024140	ACTUATOR REGIST	8
	302H024150	2H024150	PLATE MID FEED PI	8
	302H024160	2H024160	PLATE REG SW	8
	302H024170	2H024170	SHAFT CONVEYING	9
	302H024180	2H024180	SHAFT CONVEYING HOOK	9
	302H024190	2H024190	HOOK CONVEYING F	9
⊙	302H024200	2H024200	GEAR FEED Z30S CLUTCH	8
	302H024210	2H024210	GROUND PLATE REG	9
	302H024220	2H024220	SPRING GUIDE MID FEED	8
	302H024230	2H024230	SHAFT PULLEY FEED	8
	302H024240	2H024240	SPONGE CLEANER REG	8
	302H024250	2H024250	FILM GUIDE REGIST F	9
	302H024260	2H024260	FILM GUIDE REGIST R	9
	302H024270	2H024270	FILM GUIDE DU	9
	302H024280	2H024280	GUIDE CONVEYING LOW	9
	302H024290	2H024290	GROUND PLATE FAN	9
	302H024300	2H024300	SPRING CONVEYING	9
	302H024310	2H024310	PLATE FAN CONVEYING	9
	302H024320	2H024320	SPRING REGIST F	9
	302H024330	2H024330	SPRING REGIST R	9
	302H024340	2H024340	SPRING CONVEYING FEED	9
	302H024350	2H024350	MOUNT CLEANER REG	8
	302H024360	2H024360	BUSH 8 EW	4,7,9,16,18
	302H024370	2H024370	BUSH 6 EW	16
	302H024380	2H024380	PLATE GROUND SHAFT	8
	302H024390	2H024390	PLATE GROUND ROLLER	8
⊙	302H024400	2H024400	GEAR FEED Z35SZ23S	8
	302H024410	2H024410	COVER DRIVE MID FEED	16
	302H024420	2H024420	SHAFT LOCK MPF	9
	302H024430	2H024430	MOUNT LOCK SHAFT	9
	302H024440	2H024440	PLATE GROUND MID FEED	9
	302H024450	2H024450	PLATE GROUND REG SW	8
	302H024460	2H024460	FILM GUIDE MID FEED	8
	302H024470	2H024470	FILM GUIDE REG	8
	302H024500	2H024500	COVER DU WIRE	18

	Part.No.	Alternative.	Description	Fig.No.
	302H024510	2H024510	STOPPER SHUTTER	18
	302H024530	2H024530	SPRING LOCK SHAFT	9
	302H024540	2H024540	PIN LOCK MPF	9
	302H024550	2H024550	SPRING LOCK PIN	9
	302H024560	2H024560	GROUND CONVEYING PLATE	2
	302H024570	2H024570	PULLEY MID FEED A ASSY	8
	302H024580	2H024580	PULLEY MID FEED B ASSY	8
	302H024590	2H024590	COLLAR JOINT	8
	302H024600	2H024600	SPRING ACTUATOR LOWER	8
	302H024610	2H024610	SPONGE CONVEYING FAN	9
	302H024620	2H024620	SHAFT PULLEY MID FEED	8
	302H024630	2H024630	SPRING CONVEYING R	9
	302H024650	2H024650	FILM GUIDE HARNESS	8
	302H024680	2H024680	CUT WASHER 8	9
	302H024690	2H024690	FILM CONVEYING LOW	9
	302H024700	2H024700	SPONGE MID FEED GUIDE	9
	302H024710	2H024710	CUSHION TRANS	9
	302H025010	2H025010	RIGHT FRAME FUSER	14
	302H025020	2H025020	LEFT FRAME FUSER	14
⊙	302H025030	2H025030	GEAR FUSER Z46	14
	302H025040	2H025040	FRONT GUIDE FUSER	14
	302H025050	2H025050	REAR GUIDE FUSER	14
	302H025060	2H025060	COVER HEATER F	14
	302H025070	2H025070	COVER HEATER R	14
	302H025090	2H025090	GROUND PLATE HEAT R	14
	302H025150	2H025150	GROUND PLATE PRESS A	14
	302H025160	2H025160	GROUND PLATE PRESS B	14
	302H025180	2H025180	PLATE HOLDER	14
	302H025190	2H025190	FRONT PRESSING PLATE	14
	302H025200	2H025200	REAR PRESSING PLATE	14
	302H025210	2H025210	SPACER FUSER	14
	302H025220	2H025220	PLATE FUSER SPACER	14
	302H025250	2H025250	COVER FUSER UNIT	14
⊙	302H025290	2H025290	SPRING FUSER	14
	302H025300	2H025300	SPONGE FUSER TL	14
	302H025310	2H025310	SPRING PRESSURE	14
⊙	302H025320	2H025320	THERMOSTAT 190 FUSER	14
⊙	302H027010	2H027010	ROLLER FINISH UP	25
⊙	302H027020	2H027020	ROLLER FINISH LOW	25
⊙	302H027030	2H027030	COVER LEFT OP	25
	302H027040	2H027040	GUIDE COVER	25
	302H027050	2H027050	GUIDE SEPARATE FIN	25
	302H027060	2H027060	ARM SEPARATE FIN	25
⊙	302H027090	2H027090	GEAR EXIT FIN 17	25
⊙	302H027100	2H027100	GEAR EXIT FIN 14	25
	302H027110	2H027110	FRONT PLATE FIN	25
	302H027120	2H027120	REAR PLATE FIN	25
	302H027130	2H027130	PLATE SEP FIN	25
	302H027150	2H027150	GUIDE INSERT	25
	302H028010	2H028010	FRAME EXIT UPPER	20

• Parts with "⊙" indicate regular maintenance parts.

	Part.No.	Alternative.	Description	Fig.No.
	302H028020	2H028020	FRAME EXIT LOWER	20
	302H028040	2H028040	ACTUATOR EXIT INNER	20
	302H028050	2H028050	ACTUATOR EXIT FEED	20
⊙	302H028070	2H028070	PULLEY EJECT T32	20
	302H028090	2H028090	GUIDE SEPARATE INNER	20
	302H028100	2H028100	LEVER LINK	20
	302H028120	2H028120	ARM LINK	20
	302H028150	2H028150	PLATE EXIT A	20
	302H028160	2H028160	PLATE EXIT B	20
⊙	302H028170	2H028170	GEAR EXIT FEED 21	20
⊙	302H028180	2H028180	GEAR EXIT FEED 17	20
⊙	302H028190	2H028190	GEAR EXIT FEED 13	20
	302H028200	2H028200	PLATE EXIT JOINT	20
	302H028210	2H028210	SPRING EXIT JOINT	20
	302H028220	2H028220	LINK SOLENOID	20
	302H028230	2H028230	PULLEY EXIT FEED	20
	302H028250	2H028250	GROUND PLATE EXIT A	20
	302H028260	2H028260	GROUND PLATE EXIT B	20
	302H028280	2H028280	PLATE EXIT DRIVE	20
⊙	302H028290	2H028290	GEAR EXIT 73/21	20
	302H028300	2H028300	PLATE ARM LINK	20
	302H028310	2H028310	GUIDE SEPARATE FEED	19,25
	302H028320	2H028320	PULLEY SEP FEED	19
	302H028330	2H028330	GUIDE EXIT LOWER	19
	302H028340	2H028340	GUIDE DU	19
	302H028350	2H028350	ARM SEPARATE FEED A	19,25
	302H028360	2H028360	ARM SEPARATE FEED B	19,25
	302H028370	2H028370	SPRING SEPARATE FEED	19,25
	302H028380	2H028380	PLATE EXIT FEED	19
	302H028390	2H028390	SPRING GUIDE DU	19
	302H028400	2H028400	SHAFT SEP FEED	19,20
	302H028410	2H028410	SPRING EXIT FEED	19,20
	302H028510	2H028510	HOLDER SEP FEED	19
	302H028520	2H028520	SPRING ACTUATOR INNER	20
	302H028540	2H028540	SPRING SOLENOID	20
	302H028560	2H028560	REAR PLATE SEP	19
	302H028570	2H028570	PULLEY EXIT	20
⊙	302H028580	2H028580	FILM EXIT	20
	302H028590	2H028590	PLATE GUIDE DU	19
	302H029010	2H029010	FRAME DU	18
	302H029020	2H029020	GROUND PLATE DU	18
⊙	302H029030	2H029030	BELT DU 254	18
	302H029060	2H029060	SPRING DU FEED	18
⊙	302H029070	2H029070	GEAR Z25S	18
	302H029080	2H029080	PLATE DU DRIVE	18
	302H029090	2H029090	SPRING DU DRIVE	18
	302H029100	2H029100	JUNCTION PLATE DU	18
⊙	302H029110	2H029110	PULLEY 26 DU	18
	302H029130	2H029130	GROUND DUPLEX PI	18
	302H031010	2H031010	BASE MAIN DRIVE	15

	Part.No.	Alternative.	Description	Fig.No.
	302H031020	2H031020	MOUNT DRIVE DRUM	15
	302H031030	2H031030	MOUNT FEED DRIVE	16
	302H031040	2H031040	BASE FEED DRIVE	16
⊙	302H031050	2H031050	GEAR Z24H-Z35S FEED	16
⊙	302H031060	2H031060	GEAR Z23H FEED B	16
⊙	302H031080	2H031080	GEAR Z60H-Z30H FEED	16
⊙	302H031090	2H031090	GEAR Z90H-Z36H	15
⊙	302H031100	2H031100	GEAR Z95H-Z41S FEED	16
⊙	302H031110	2H031110	GEAR Z40H-Z27H	15
⊙	302H031120	2H031120	GEAR Z35S DU	16
⊙	302H031130	2H031130	GEAR Z30H	15
⊙	302H031140	2H031140	GEAR Z152H	15
⊙	302H031150	2H031150	GEAR Z41S FEED	16
⊙	302H031160	2H031160	GEAR Z50S	15
⊙	302H031170	2H031170	GEAR Z25H DEV	15
⊙	302H031180	2H031180	GEAR Z89H-Z24S	15
⊙	302H031190	2H031190	GEAR Z25H	15
	302H031200	2H031200	SHAFT FEED	16
⊙	302H031210	2H031210	GEAR Z22H-Z24S FEED	16
	302H031220	2H031220	SHAFT DU	16
⊙	302H031230	2H031230	GEAR Z43S	15
⊙	302H031240	2H031240	GEAR Z55H-Z30S	15
⊙	302H031250	2H031250	GEAR Z30S FEED	16
⊙	302H031260	2H031260	GEAR Z33S CONT	16
⊙	302H031270	2H031270	GEAR Z23H FEED	16
⊙	302H031280	2H031280	GEAR Z30S DPX	16
	302H031290	2H031290	BASE CONT DRIVE	16
	302H031300	2H031300	MOUNT CONT DRIVE	16
⊙	302H031310	2H031310	GEAR Z26S DU	16
	302H031320	2H031320	POSITIONING BUSH DRUM	15
	302H031330	2H031330	SPRING DRUM COUPLING	15
	302H031340	2H031340	SHAFT COUPLING	15
	302H031350	2H031350	SHAFT CONT	16
	302H031360	2H031360	HOLDER MOTOR	15,16
	302H031370	2H031370	GUIDE SHAFT DEV	15
⊙	302H031380	2H031380	GEAR Z33S CONT C	16
⊙	302H031390	2H031390	GEAR Z33S CONT D	16
⊙	302H031400	2H031400	TORQUE LIMITER 4000	16
	302H031410	2H031410	SPRING FUSER JOINT	15
	302H033010	2H033010	DUCT BASE	17
	302H033020	2H033020	DUCT LID H	17
	302H033030	2H033030	DUCT PLATE	17
	302H033040	2H033040	DUCT BOTTOM	17
⊙	302H033050	2H033050	HOLDER FILTER A	17
	302H033060	2H033060	FILTER DUST A	17
	302H033080	2H033080	DUCT REAR LOWER	17
	302H033090	2H033090	DUCT REAR UPPER	17
	302H033100	2H033100	DUCT LID G	17
	302H033120	2H033120	DUCT LID J	17
	302H033130	2H033130	DUCT REAR B LOWER	17

• Parts with "⊙" indicate regular maintenance parts.

	Part.No.	Alternative.	Description	Fig.No.
	302H033140	2H033140	DUCT REAR B UPPER	17
	302H033160	2H033160	SHEET DUCT	17
	302H033170	2H033170	FILTER OZONE A	19
⊙	302H033180	2H033180	FILTER OZONE B	1
	302H033190	2H033190	SPONGE REAR FAN	17
	302H034050	2H034050	LABEL VERTICAL COVER	4
	302H034070	2H034070	LABEL PAPER SET	3
⊙	302H034120	2H034120	LABEL CASSETTE OPERATION	3
	302H034130	2H034130	LABEL HIGH TEMP	19
⊙	302H034140	2H034140	LABEL CONVEYING JAM	1
	302H034170	2H034170	LABEL CAUTION	1
	302H034180	2H034180	LABEL CAUTION GEAR	1
	302H039060	2H039060	BASE TERMINAL MAIN	21
	302H039070	2H039070	BASE TERMINAL TRANSFER	21
	302H039080	2H039080	TERMINAL MAIN	21
	302H039090	2H039090	TERMINAL TRANSFER	21
	302H039100	2H039100	TERMINAL SEPARATION	21
	302H039110	2H039110	TERMINAL DLP	21
	302H039120	2H039120	MOUNT POWER PWB	21
	302H039160	2H039160	MOUNT HV PWB	21
	302H039170	2H039170	MOUNT INLET	21
	302H039180	2H039180	MOUNT OPTION I/F	21
	302H039190	2H039190	TERMINAL TRANSFER R	21
	302H039200	2H039200	TERMINAL SEPARATION R	21
	302H039210	2H039210	LID HV TERMINAL	21
	302H039230	2H039230	GUIDE WIRE R	21,22
	302H039240	2H039240	GUIDE WIRE L	21
	302H039260	2H039260	MOUNT MAIN SW	21
	302H039270	2H039270	LID WIRE GUIDE	21,22
	302H039290	2H039290	LID DUCT	17
	302H039330	2H039330	GROUND REAR COVER	17
⊙	302H044100	2H044100	SWITCH BYPASS SIZE	6
⊙	302H044110	2H044110	SENSOR ORIGINAL	10
	302H046120	2H046120	WIRE CASSETTE	21
	302H046140	2H046140	WIRE EJECT UNIT	20
	302H046170	2H046170	WIRE SCANNER PI	10
	302H046180	2H046180	WIRE LVU	21
	302H046210	2H046210	WIRE CONVEYING UNIT	4
	302H046220	2H046220	FFC CCD	10
	302H046250	2H046250	WIRE FRONT	22
	302H046260	2H046260	WIRE HVU	22
	302H046280	2H046280	WIRE MAIN MOTOR	21
	302H046300	2H046300	WIRE CONVEYING	21
	302H046310	2H046310	WIRE MPF	22
	302H046320	2H046320	WIRE DF I/F	21
	302H046330	2H046330	WIRE DP	10
	302H046350	2H046350	WIRE MIDDLE FEED	8
	302H046370	2H046370	WIRE DU	18
	302H046380	2H046380	WIRE PRIMARY	22
	302H046410	2H046410	WIRE DH JUNCTION	22

	Part.No.	Alternative.	Description	Fig.No.
	302H046420	2H046420	WIRE FUSER PRIMARY	14
	302H046430	2H046430	WIRE RESIST	8
	302H046440	2H046440	WIRE MAIN SW	21
	302H046450	2H046450	WIRE MPF PI	7
	302H046460	2H046460	WIRE FUSER PWB	14
	302H046470	2H046470	WIRE CONVEYING FAN	9
	302H046530	2H046530	WIRE LSU JUNCTION	11
	302H046540	2H046540	WIRE LVU FAN	21
	302H046560	2H046560	WIRE INLET	21
	302H046570	2H046570	WIRE FRONT JUNCTION	12
	302H046600	2H046600	WIRE CASSETTE SW	5
	302H046680	2H046680	WIRE INTERLOCK JUNCTION	21
	302H046690	2H046690	WIRE CASSETTE SIZE	5
	302H046770	2H046770	WIRE LAMP INVERTER	21
⊙	302H093010	2H093010	PARTS DK-670	12
⊙	302H093030	2H093030	PARTS FK-670(U)	14
⊙	302H093040	2H093040	PARTS FK-670(E)	14
⊙	302H093050	2H093050	PARTS TR-670	9
⊙	302H093060	2H093060	PARTS LK-670	11
⊙	302H093070	2H093070	PARTS ISU	10
⊙	302H093080	2H093080	PARTS VERTICAL FEEED UNIT	4
⊙	302H093090	2H093090	PARTS MIDDLE FEEED UNIT	8
⊙	302H093100	2H093100	PARTS CT-670	3
⊙	302H093110	2H093110	PARTS MPF UNIT	6
⊙	302H093120	2H093120	PARTS MPF FEED UNIT	7
⊙	302H093150	2H093150	PARTS DR-670	15
⊙	302H093160	2H093160	PARTS FEED DRIVE UNIT	16
⊙	302H093170	2H093170	PARTS CONT DRIVE ASSY	16
⊙	302H093180	2H093180	PARTS CONVEYING UNIT	9
⊙	302H093190	2H093190	PARTS EXIT UNIT	20
⊙	302H093200	2H093200	PARTS DUPLEX UNIT	18
⊙	302H093210	2H093210	PARTS MIDDLE HOPPER UNIT	13
⊙	302H093280	2H093280	PARTS LVU 100	21
⊙	302H093290	2H093290	PARTS LVU 200	21
⊙	302H093300	2H093300	PARTS CONTACT GLASS DP	11
⊙	302H093310	2H093310	PARTS MC-670	12
⊙	302H094090	2H094090	PARTS ROLLER VERTICAL FEED A SP	4
⊙	302H094100	2H094100	PARTS ROLLER VERTICAL FEED B SP	4
⊙	302H094110	2H094110	PARTS ROLLER MPF FEED A SP	7
⊙	302H094120	2H094120	PARTS ROLLER MPF FEED B SP	7
⊙	302H094130	2H094130	PARTS LAMP SCANNER W SP	10
⊙	302H094140	2H094140	PARTS ROLLER REGIST LEFT SP	9
⊙	302H094160	2H094160	PARTS ROLLER HEAT SP	14
⊙	302H094180	2H094180	PARTS HEATER FUSER 120 SP	14
⊙	302H094190	2H094190	PARTS HEATER FUSER 230 SP	14
⊙	302H094200	2H094200	PARTS MOTOR MAIN SP	15,16
⊙	302H094210	2H094210	PARTS CLUTCH FEED SP	4,5,8,18
⊙	302H094220	2H094220	PARTS CLUTCH REGISTRATION SP	9,16
⊙	302H094230	2H094230	PARTS SWITCH CONVEYING SP	4,18
⊙	302H094240	2H094240	PARTS HEATER DRUM SP	22

• Parts with "⊙" indicate regular maintenance parts.

	Part.No.	Alternative.	Description	Fig.No.
⊙	302H094250	2H094250	PARTS,HIGH VOLTAGE,SP	22
⊙	302H094280	2H094280	PARTS,LAMP INVERTER,SP	10
⊙	302H094300	2H094300	PARTS,HUMIDITY SENSOR,SP	22
⊙	302H094320	2H094320	PARTS DC MOTOR SP	13
⊙	302H094340	2H094340	PARTS,PWB ENGINE ASS'Y,SP	21
⊙	302H094360	2H094360	PARTS ROLLER EXIT FEED SP	20
⊙	302H094370	2H094370	PARTS ROLLER EXIT INNER SP	20
⊙	302H094380	2H094380	PARTS DUPLEX A SP	18
⊙	302H094390	2H094390	PARTS DUPLEX B SP	18
⊙	302H094400	2H094400	PARTS HOLDER FILTER A SP	17
⊙	302H094430	2H094430	PARTS PULLEY MID FEED ASSY SP	8
⊙	302H094440	2H094440	PARTS MOTOR SCANNER SP	10
⊙	302H094450	2H094450	PARTS ROLLER PRESS SP	14
⊙	302H094470	2H094470	PARTS THERMISTOR SP	17
⊙	302JB04030	2JB04030	COVER EMBLEM B	1
	302JB45010	2JB45010	LCD OPERATION	23
	302JB46010	2JB46010	WIRE PANEL MAIN	21
	302JB46020	2JB46020	WIRE PANEL UNIT	23
	302JB46040	2JB46040	WIRE LVU	21
	302JB46050	2JB46050	WIRE LCD	23
	302JB46060	2JB46060	WIRE PANEL JUNCTION	23
	302JB46070	2JB46070	WIRE PANEL RIGHT	22
⊙	302JB94010	2JB94010	PARTS COVER EMBLEM SP	1
⊙	302JB94020	2JB94020	PARTS,PWB MAIN ASSY SP	21
⊙	302JB94030	2JB94030	PARTS,PWB OPERATION RIGHT ASSY SP	23
⊙	302JB94040	2JB94040	PARTS,PWB OPERATION TOP ASSY SP	23
⊙	302JB94050	2JB94050	PARTS,PWB OPERATION BOTTOM ASSY SP	23
⊙	302JB94060	2JB94060	PARTS,PWB INTERFACE ASSY SP	21
⊙	302JC04010	2JC04010	COVER RIGHT LOW	1
⊙	302JC04020	2JC04020	COVER REAR	1
⊙	302JC04070	2JC04070	COVER REAR PWB	1
⊙	302JC04080	2JC04080	COVER EMBLEM B	1
⊙	302JC04090	2JC04090	COVER FRONT TOP	1
⊙	302JC05010	2JC05010	COVER OPERATION	23
	302JC05020	2JC05020	MOUNT LCD	23
⊙	302JC05030	2JC05030	COVER BASE OPERATION	23
⊙	302JC05040	2JC05040	KEY COPY	23
⊙	302JC05050	2JC05050	KEY PRINTER	23
⊙	302JC05060	2JC05060	KEY FAX	23
	302JC05070	2JC05070	LENS LED	23
⊙	302JC05080	2JC05080	KEY PRINT	23
⊙	302JC05100	2JC05100	KEY STOP	23
⊙	302JC05180	2JC05180	LABEL START E	23
⊙	302JC05190	2JC05190	LABEL STOP E	23
⊙	302JC05200	2JC05200	LABEL RESET E	23
⊙	302JC05210	2JC05210	LABEL POWER E	23
⊙	302JC05220	2JC05220	LABEL FUNCTION E	23
⊙	302JC05230	2JC05230	LABEL SYSTEM MENU E	23
⊙	302JC05240	2JC05240	LABEL COPY E	23
	302JC39010	2JC39010	MOUNT ENGINE MAIN C	21

	Part.No.	Alternative.	Description	Fig.No.
	302JC39020	2JC39020	SHIELD MAIN PWB C	21
	302JC39030	2JC39030	LID PRINTER BOARD	21
	302JC39060	2JC39060	MOUNT PRINT CONNECTOR	21
	302JC39070	2JC39070	SHIELD MAIN TOP	21
	302JC39080	2JC39080	LID RIGHT TOP PLATE	22
	302JC39100	2JC39100	LID RIGHT PLATE	22
	302JC39110	2JC39110	GUIDE WIRE C	21
⊙	302JC93020	2JC93020	PARTS OPERATION UNIT EXP	23
⊙	302JC94010	2JC94010	PARTS COVER EMBLEM SP	1
	303A206131	3A206131	JOINT,BYPASS PICKUP	6
⊙	303J131270	3J131270	BELT S2M 230	7
	303KZ02180	3KZ02180	PIN SCREW BIND 3X6S	2,5,14,16,19
	3066060011	66060011	COVER,KEY COUNTER	26
	3066060041	66060041	MOUNT,KEY COUNTER	26
⊙	33906070		TORQUE LIMITER,PAPER FEED	5
⊙	33906160		GEAR 16,PAPER FEED	5,6
⊙	33906430		TORQUE LIMITER,BYPASS	6
	33907170		DETECTION PLATE,PAPER SIZE	3
	33907210		CUSHION,CASSETTE WORK PLATE	3
	34806040		LOWER BUSHING,PAPER FEED	5
	34806490		FRICTION PLATE,BYPASS LEADING FEED	6
⊙	34821210		STATIC ELIMINATOR B,EJECT	20
⊙	34907141		GEAR 18,CASSETTE	6
	34907150		PULLEY,CASSETTE	3
⊙	34922420		GEAR 15	5
⊙	35927420		SWITCH,SIZE	4
	35968110		STOPPER WIRE ASS'Y SP	26
	3A206100		ARM,BYPASS PE	6
	3A206170		HOLDER,RETARD	6
	3A206210		MOUNT,BYPASS PE SWITCH	6
⊙	3CF04060		PLATE NUMBER4	3
	3CY06030		RETAINER M4	3
⊙	3CY06090		RACK CURSOR	3
⊙	3CY06100		GEAR 20,CURSOR	3
	3CY07080		BUSHING 6	6,8,20,25
	3CZ02240		PIN,DRAWER SIDE CONVEYING	2
⊙	3H627280		FAN DP	17
⊙	3HY07120		PULLEY 15 DUPLEX	4,9,18
⊙	5AAVCLTCH018	2A806910	ONE WAY CLUTCH /A-49 MPF A4	20,25
⊙	5AAXAP072GEA++R	2DD27130	100PIN DIMM 64M	21
⊙	5FNXGP1A73A++02	2DC27180	PT.SENSOR GP1A73AJ00/ BK	5,10
	5MMS111SL002	2BY20050	NUT FUSER A /FS-1800/3800 A4	17
	5MMW141LX002	2BZ02300	SPRING WIRE /49585J0058 A4	12
	5MVL177DN002	2FB06820	RING STOPPER 6	7
	5MVT263NN001	33910230	PIN CHARGER /A-49 CHARGER A4	12
	5MVX111DN003	2A806250	RING STOPPER /A-49 FEED A4	4,5,8,10,16,18,19,20,25
⊙	5MVX222XN002	2A820530	SEPARATOR /40301P0028 A4	14
⊙	5MVX321CE001	3CF04050	PLATE NUMBER 3 /3CF0405 A4	3
⊙	5MVX421DN003	2BL06490	LOCK COVER R /40283V0068 A4	4

• Parts with "⊙" indicate regular maintenance parts.

	Part.No.	Alternative.	Description	Fig.No.
	5MVX431NN001	3D302100	SPACING CLIP /VSC-10 XX	6,22
	5MVX621SH003	2BM26020	GUID CF CARD /45252C0006 A4	21
	60904280		ORIGINAL POCKET	24
⊙	60907170		CUSHION,CASSETTE R	3
⊙	61705110		LABEL,PAPER UPPER LIMIT	3
⊙	61706770		UPPER PULLEY,BYPASS	6
⊙	66006810		GEAR,16 BYPASS PULLEY	6
	66007310		PIN,CASSETTE WORK PLATE	6
	66106080		SPRING,PAD	3
	66107100		PAD,CASSETTE	3
⊙	66127010		SWITCH,COVER OPEN	5
	68822330		BEARING,DRIVE	25
⊙	72321350		GEAR 30, FD EJECT IDLE	6
⊙	7SC010101+++H01	SC023350	SW.SEESAW	21
⊙	7SM010202+++H01	SM044270	SW.MICRO	19
⊙	7SP01000001+H01	SP044290	SW.PUSH	16
	7YBER0R0U001H01	YB044700	FERRITE CORE	25
	7YCC02B1001+H01	YC014610	CONNECTOR	18
⊙	7YCC08B2046+H01	YC026110	CONNECTOR	3,5
⊙	7YCC08B2046+H02	YC026130	CONNECTOR	5
	7YCC09B1106+H01	YC051480	CONNECTOR	22
	7YZM210002++H01	YZ004730	ACCESS.EDGING	21,22
	7YZM210005++H01	YZ037990	ACCESS.EDGING	21,22
	7YZM210006++H01	YZ038000	ACCESS.EDGING	1,26
	7YZM390002++H01	YZ012140	ACCESS.CLAMP	2,21,22
	7YZM420003++H01	YZ052580	ACCESS.BAND	9,14,18
	7YZM510007++H01	YZ042780	ACCESS.SPACER	21
	7YZM610001++H01	YZ010230	ACCESS SADDLE	2,15,17,21,22
	7YZM610002++H01	YZ010240	ACCESS SADDLE	5
	7YZM610003++H01	YZ010250	ACCESS SADDLE	2,6,15,16,21,22
	7YZM610005++H01	YZ012220	ACCESS SADDLE	15,22
	7YZM610007++H01	YZ023340	ACCESS.SADDLE	8,9,16,22
	7YZM610008++H01	YZ037940	ACCESS.SADDLE	8,10
	7YZM610009++H01	YZ042980	ACCESS.SADDLE	9,15
	7YZM610011++H01	YZ043000	ACCESS.SADDLE	21
	7YZM610013++H01	YZ043020	ACCESS.SADDLE	22
⊙	G3169000		BEARING 6900ZZNR	15
	M2104350		EDGING,EDS-0607M(KITAGAWA)	6
	M2104390		EDGING,EDS-0607L(KITAGAWA)	10,20
	M2105210		MINI CLAMP,UAMS-02WL-0(KITAGAWA)	6
	M2105740		MINIATURE CLAMP,UAMS-05S-2	6
	M2105890		CLAMP,CKN-05(KITAGAWA)	21
	M2108130		SPACER,KGPS-4S	21
	M2109150		WIRE SADDLE,HL-28	15
	M21AH010		BAND,RSG-130-V0(KITAGAWA)	5,8,9,22,26

• Parts with "⊙" indicate regular maintenance parts.

KYOCERA MITA EUROPE B.V.

Hoeksteen 40, 2132 MS Hoofddorp,
The Netherlands
Phone: +31.20.654.0000
Home page: http://www.kyoceramita-europe.com
Email: info@kyoceramita-europe.com

KYOCERA MITA NEDERLAND B.V.

Beechavenue 25,1119RA Schiphol-Rijk
The Netherlands
Phone: +31.20.58.77.200

KYOCERA MITA (UK) LTD

8 Beacontree Plaza
Gillette Way Reading Berks RG2 0BS,
U.K.
Phone: +44.1189.311.500

KYOCERA MITA ITALIA S.p.A.

Via G. Verdi, 89 / 91, 20063 Cernusco s/N
Milano, Italy
Phone: +39.02.92179.1

S.A. KYOCERA MITA BELGIUM N.V.

Hermesstraat 8A,1930 Zaventem,
Belgium
Phone: +32.2.720.9270

KYOCERA MITA FRANCE S.A.

Parc Les Algorithmes Saint Aubin
91194 GIF-SUR-YVETTE,
France
Phone: +33.1.6985.2600

KYOCERA MITA ESPAÑA S.A.

Edificio Kyocera, Avda de Manacor No. 2,
28290 Las Matas (Madrid),
Spain
Phone: +34.91.631.8392

KYOCERA MITA FINLAND OY

Kirvesmiehenkatu 4, 00880 Helsinki,
Finland
Phone: +358.9.4780.5200

KYOCERA MITA (SCHWEIZ)

Hohlstrasse 614, 8048 Zürich
Switzerland
Phone: +41.1.908.4949

KYOCERA MITA DEUTSCHLAND GMBH

Otto-Hahn-Str. 12 D-40670 Meerbusch,
Germany
Phone: +49.2159.918.0

KYOCERA MITA GMBH AUSTRIA

Eduard-Kittenberger-Gasse 95,
1230 Wien,
Austria
Phone: +43.1.86338.210

KYOCERA MITA SVENSKA AB

Esbogatan 16B 164 75 Kista,
Sweden
Phone: +46.8.546.55000

KYOCERA MITA NORGE

Postboks 150 Oppsal, NO 0619 Oslo
Olaf Helsetsvei 6, NO 0694 Oslo,
Norway
Phone: +47.22.62.73.00

KYOCERA MITA DANMARK A/S

Ejby Industrivej 1, DK-2600 Glostrup,
Denmark
Phone: +45.5687.1100

KYOCERA MITA PORTUGAL LDA.

Rua do Centro Cultural, 41 (Alvalade) 1700-106 Lisbon,
Portugal
Phone: +351.21.842.9100

KYOCERA MITA SOUTH AFRICA (PTY) LTD.

527 Kyalami Boulevard,
Kyalami Business Park Midrand,
South Africa
Phone: +27.(0)11.540.2600

KYOCERA MITA AMERICA, INC.

Headquarters:
225 Sand Road,
Fairfield, New Jersey 07004-0008,
U.S.A.
Phone: (973) 808-8444

KYOCERA MITA AUSTRALIA PTY. LTD.

Level 3, 6-10 Talavera Road, North Ryde,
N.S.W. 2113 Australia
Phone: (02) 9888-9999

KYOCERA MITA NEW ZEALAND LTD.

1-3 Parkhead Place, Albany
P.O. Box 302 125 NHPC, Auckland,
New Zealand
Phone: (09) 415-4517

KYOCERA MITA (THAILAND) CORP., LTD.

9/209 Ratchada-Prachachem Road,
Bang Sue, Bangkok 10800, Thailand
Phone: (02) 586-0320

KYOCERA MITA SINGAPORE PTE LTD.

121 Genting Lane, 3rd Level,
Singapore 349572
Phone: 67418733

KYOCERA MITA HONG KONG LIMITED

11/F., Mita Centre,
552-566, Castle Peak Road,
Tsuen Wan, New Territories,
Hong Kong
Phone: 24297422

KYOCERA MITA TAIWAN Corporation.

7F-1~2, No.41, Lane 221, Gangchi Rd.
Neihu District, Taipei, Taiwan, 114. R.O.C.
Phone: (02) 87511560

KYOCERA MITA Corporation

2-28, 1-chome, Tamatsukuri, Chuo-ku
Osaka 540-8585, Japan
Phone: (06) 6764-3555
http://www.kyoceramita.com

©2007 KYOCERA MITA Corporation
KYOCERA is a trademark of Kyocera Corporation

Printed in Holland

KYOCERA MITA AMERICA, INC.

Headquarters:
225 Sand Road,
Fairfield, New Jersey 07004-0008
TEL : (973) 808-8444
FAX : (973) 882-6000

New York Branch:
1410 Broadway 23rd floor
New York, NY 10018
TEL : (917) 286-5400
FAX : (917) 286-5402

Northeastern Region:
225 Sand Road,
Fairfield, New Jersey 07004-0008
TEL : (973) 808-8444
FAX : (973) 882-4401

Midwestern Region:
201 Hansen Court Suite 119
Wood Dale, Illinois 60191
TEL : (630) 238-9982
FAX : (630) 238-9487

Western Region:
14101 Alton Parkway,
Irvine, California 92618-7006
TEL : (949) 457-9000
FAX : (949) 457-9119

Southeastern Region:
1500 Oakbrook Drive,
Norcross, Georgia 30093
TEL : (770) 729-9786
FAX : (770) 729-9873

Southwestern Region:
2825 West Story Road,
Irving, Texas 75038-5299
TEL : (972) 550-8987
FAX : (972) 252-9786

National Operation Center
& National Training Center:
2825 West Story Road,
Irving, Texas 75038-5299
TEL : (972) 659-0055
FAX : (972) 570-5816

Latin America Division:
8240 N.W. 52nd. Terrace Dawson Building,
Suite 108 Miami, Florida 33166
TEL : (305) 421-6640
FAX : (305) 421-6666

KYOCERA MITA CANADA, LTD.

6120 Kestrel Road, Mississauga,
Ontario L5T 1S8, Canada
TEL : (905) 670-4425
FAX : (905) 670-8116

KYOCERA MITA MEXICO, S.A. DE C.V.

Av. 16 de Septiembre #407
Col. Santa Inés,
Azcapotzalco México,
D.F. 02130, México
TEL : (55) 5383-2741
FAX : (55) 5383-7804

©2007 KYOCERA MITA Corporation

http://www.kyoceramita.com
KYOCERA is a trademark of Kyocera Corporation

Printed in U.S.A.