TTP-384M

THERMAL TRANSFER / DIRECT THERMAL BAR CODE PRINTER

Parts List

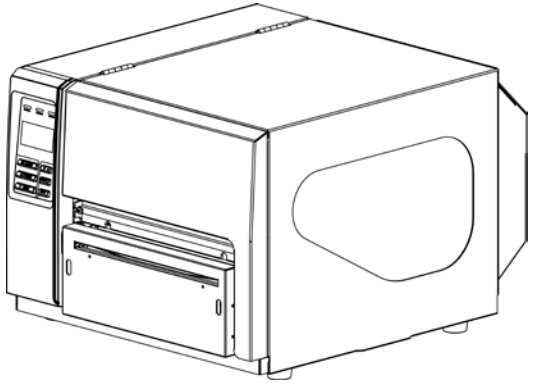

TABLE OF CONTENT

Part List **3**
1 Main Printer Assemblies **3**
2 LCD Panel Assembly **5**
3 Print Engine Lower Mechanism Assembly **6**
4 Electronics Maintenance Kit & Drive System **7**
5 Option and Accessories **8**
Update History **9**

Part List

1 Main Printer Assemblies

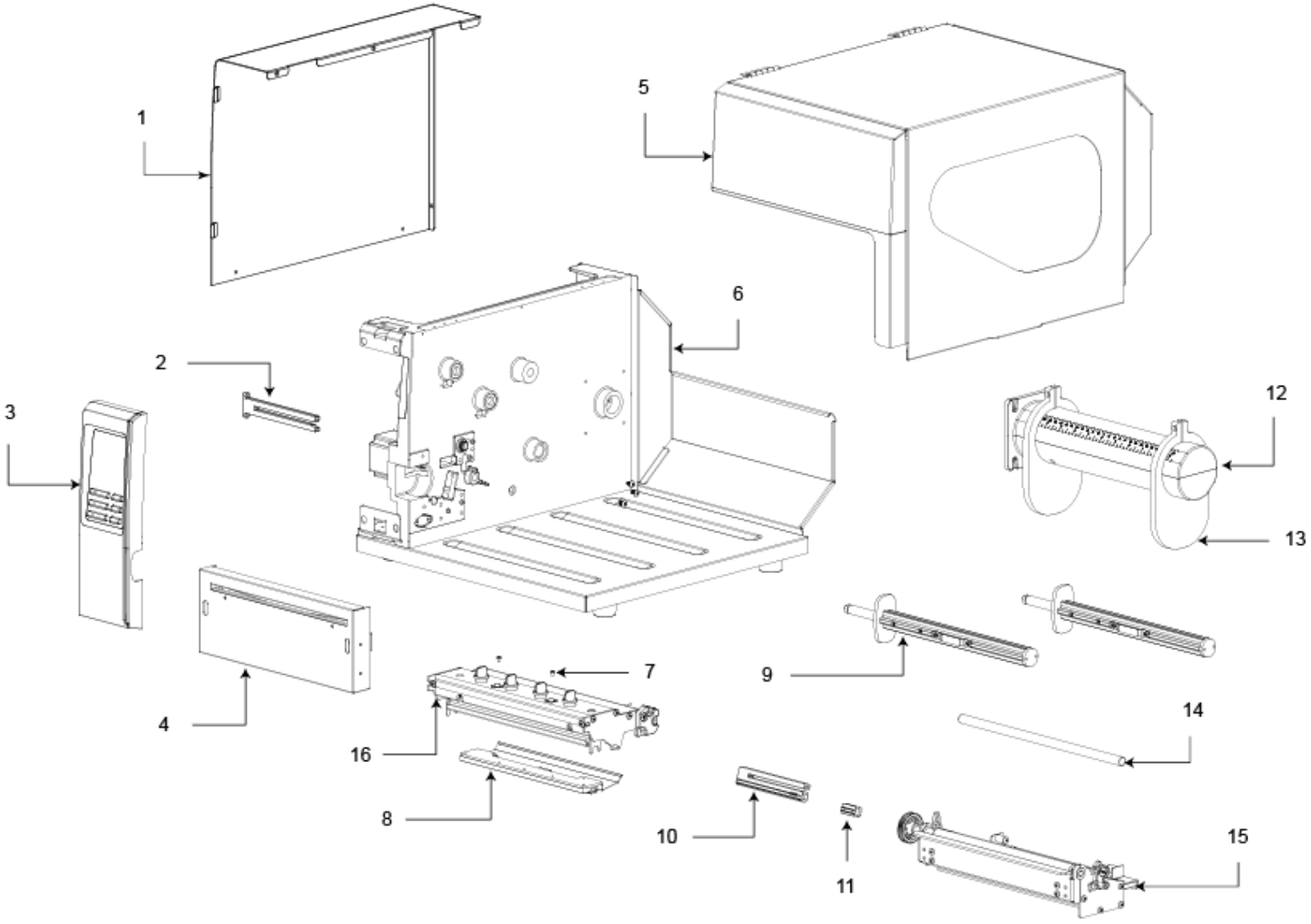

No.	Part No.	Description	Remark	Spare parts
1	98-0350027-00LF	Electronics cover	1 pc	
2	98-0350005-10LF	Ribbon sensor assembly	1 pc	1%
3	98-0240046-01LF	LCD panel assembly	1 set	
4	98-0350036-10LF	Cutter module (Optional)	1 set	
5	98-0350021-03LF	Top right side cover	1 pc	
6	N/A	Mainframe	1 pc	
7	37-1503004-34LF	Screw, M3x4 (For TPH), MOQ 50 pcs	2 pc	
8	98-0350032-00LF	Print head module	1 set	3%
9	98-0350016-00LF	Ribbon spindle assembly	2 sets	
10	98-0350011-20LF	Gap sensor assembly	1 pc	1%
11	98-0350012-40LF	Black-mark sensor assembly	1 pc	1%
12	98-0350015-00LF	Media supply spindle assembly (Including fixing tab)	1 set	
13	30-0410018-10LF	Media fixing tab	2 pcs	
14	98-0350034-00LF	Media guide bar	1 pc	
15	98-0350008-10LF	Print engine lower mechanism assembly (Including platen roller assembly)	1 set	1%
16	98-0350007-01LF	Print engine top mechanism assembly (Without print head module)	1 set (For RMA)	
N/S	72-0350003-00LF	Print head harness	1 pc	

N/A：Not available separately

N/S：Not shown

2 LCD Panel Assembly

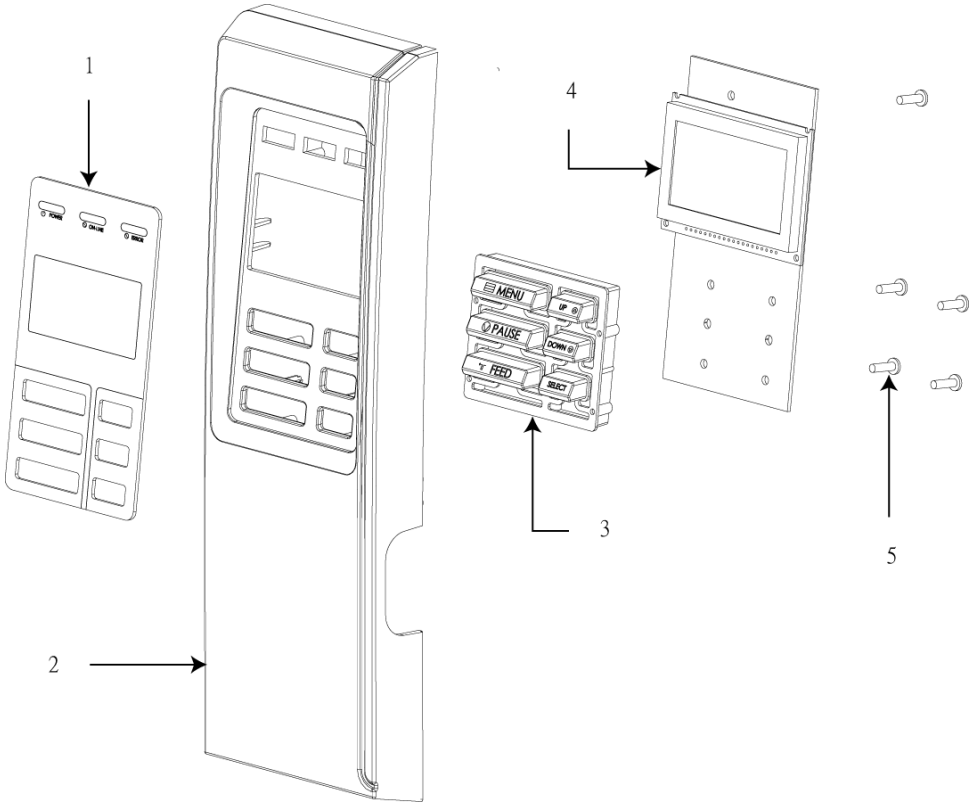

No.	Part No.	Description	Remark	Spare parts
1	30-0240012-00LF	Panel plate	1 pc	
2	30-0240010-00LF	Panel cover	1 pc	
3	30-0240011-00LF	Keypad	1 pc	
4	98-0240014-10LF	LCD panel board assembly	1 pc	1%
5	37-1403008-34LF	Screw, TP3*8, MOQ 50 pcs	5 pcs	

3 Print Engine Lower Mechanism Assembly

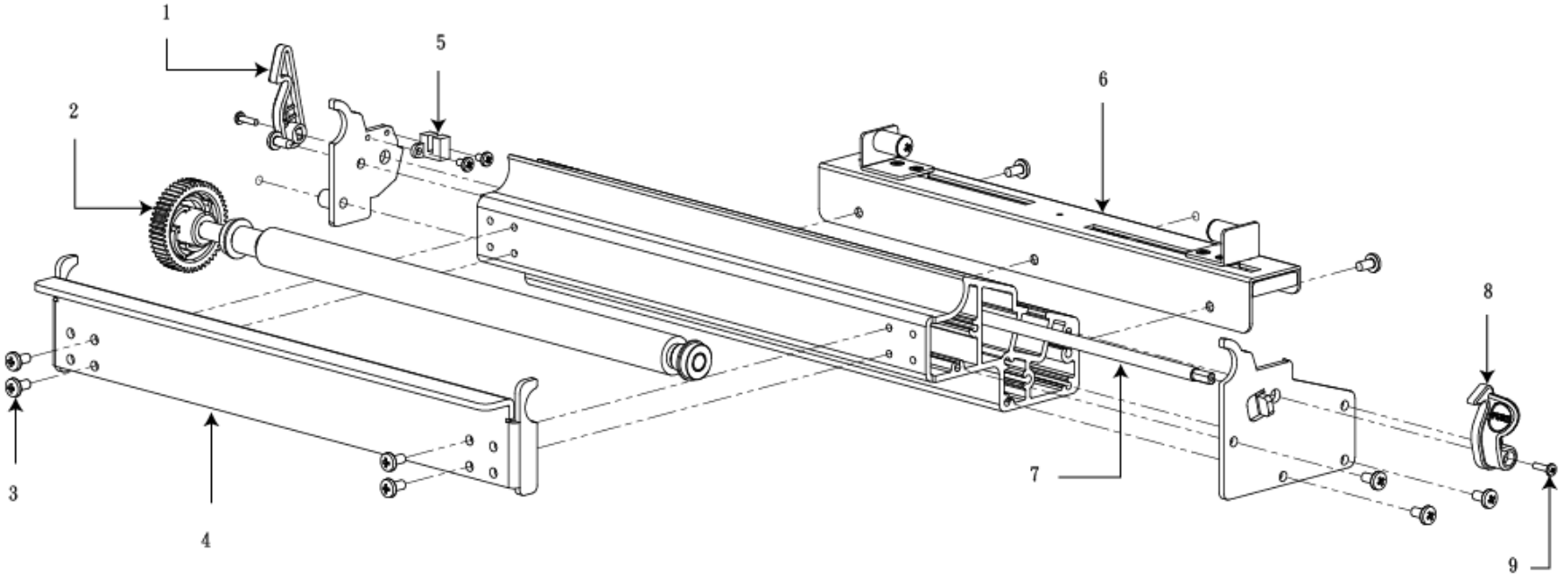

No.	Part No.	Description	Remark	Spare parts
1	30-0240032-30LF	Print head release lever (Left), MOQ 5 pcs	1 pc	
2	98-0350033-10LF	Platen roller assembly	1 set	3%
3	37-1504008-84LF	Screw, M4*8, MOQ 50 pcs	4 pcs	
4	32-0350030-10LF	Platen holder	1 pc	

5	98-0240034-00LF	Print head open sensor	1 pc	
6	98-0350009-00LF	Label guide assembly	1 set	
7	32-0350031-00LF	Shaft	1 pc	
8	30-0240031-20LF	Print head release lever (Right), MOQ 5 pcs	1 pc	
9	37-1502510-34LF	Screw, M2.5*10, MOQ 50 pcs	2 pc	

4 Electronics Maintenance Kit & Drive System

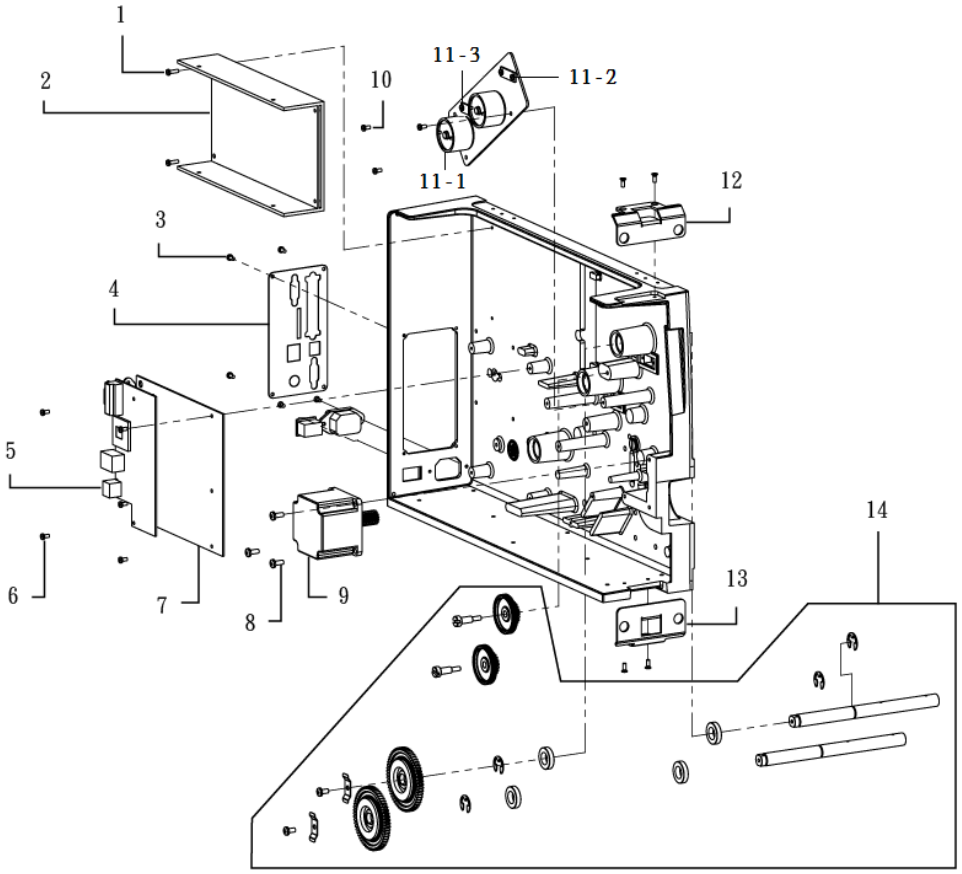

No.	Part No.	Description	Remark	Spare parts
1	37-1503010-34LF	Screw, M3*10L* ,MOQ 50 pcs	2 pcs	
2	62-0410350-10LF	Power supply unit	1 set	3%
	98-0410075-00LF	Power supply unit	1set	
3	37-1503006-14LF	Screw, M3*6L* ,MOQ 50 pcs	4 pcs	
4	32-0240006-21LF	Interface plate	1 pc	
5	98-0240044-11LF	Multi-interface board assembly	1 set	
	98-0240044-10LF	GPIO with multi-interface board assembly (Factory option)	1 set	
6	37-1503006-14LF	Screw, M3*6L* ,MOQ 50 pcs	3 pcs	
7	98-0350035-51LF	Main board	1 set	3%
8	37-1504010-84LF	Screw, M4*10L* ,MOQ 50 pcs	3 pcs	
9	65-0240002-00LF	Stepping motor kit	1 set	1%
10	37-1503006-14LF	Screw, M3*6L* § 6.3, MOQ 50 pcs	3 pcs	
11-1	65-0180003-10LF	DC motor	2 pcs	1%
11-2	98-0350025-00LF	Ribbon take up sensor assembly	1 pc	1%
11-3	98-0350026-00LF	Ribbon supply sensor assembly	1 pc	1%
12	32-0350054-00LF	LCD panel fixing plate/Top	1 pc	
13	32-0350055-00LF	LCD panel fixing plate/Lower	1 pc	
14	98-0350017-00LF	Gear set	1 set	1%

5 Option and Accessories

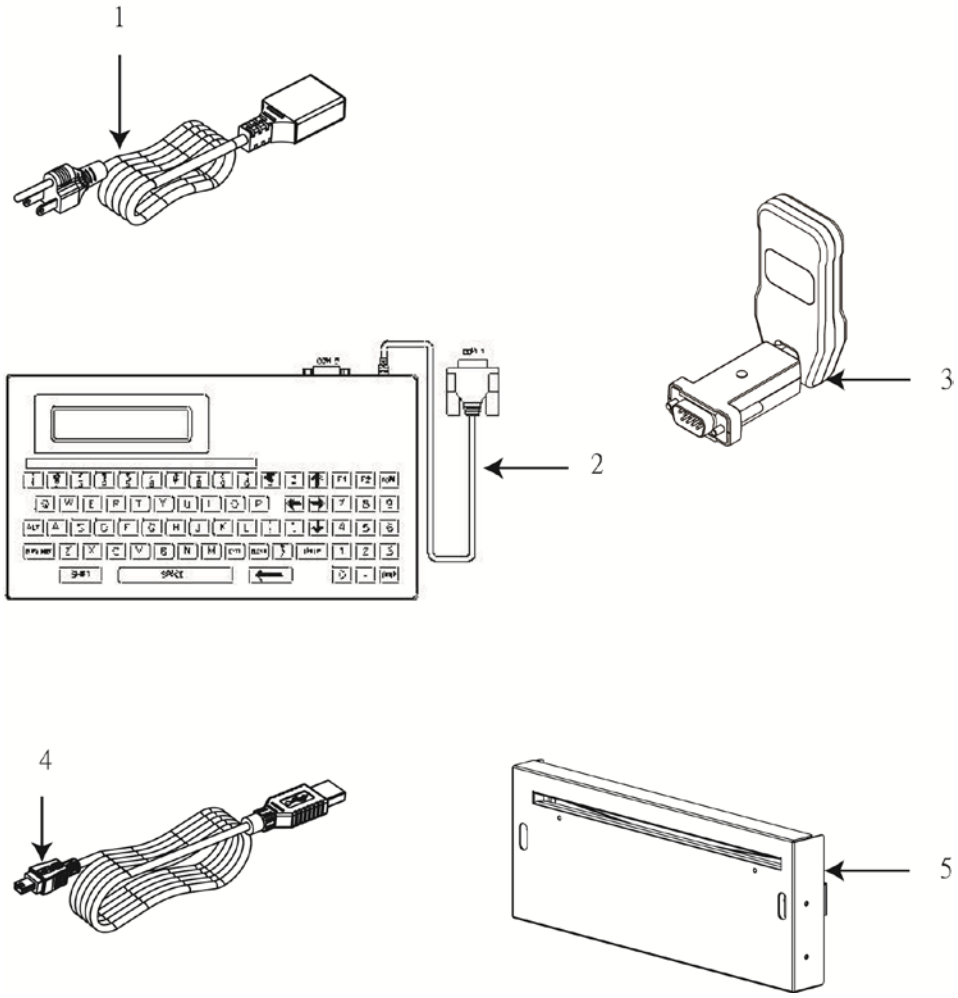

No.	Part No.	Description	Remark	Spare parts
1	72-0180100-00LF	Power cord / US	Standard	
	72-0180100-01LF	Power cord / EU 90 degree	Option	
	72-0180100-02LF	Power cord / UK	Option	
	72-0180100-03LF	Power cord / AU	Option	
	72-0180100-14LF	Power cord / JP	Option	
	72-0180100-05LF	Power cord / CH	Option	
	72-0180100-0DLF	Power cord / CN	Option	
	72-0180100-09LF	Power cord / BR	Option	
	72-0180100-0GLF	Power cord / KR	Option	
2	99-0230001-00LF	KU-007 Plus, programmable keyboard unit	Option	
	99-0170001-00LF	KP-200, stand-alone keyboard unit	Option	
3	99-125A041-00LF	External Bluetooth module (for RS-232 interface)	Option	
4	72-0010030-00LF	USB cable (1500 mm)	Standard	
	72-0010001-00LF	Parallel port cable	Option	
	72-0050002-00LF	RS-232 cable	Option	
5	98-0350036-10LF	Regular cutter module	Option	
	98-0350036-11LF	Heavy duty cutter module	Option	

Update History

Date	Content	Editor
2009/1/9	Add top right side cover part no. Remove external wireless print server part no.	Camille
2009/1/19	Revise chart of section 1	Camille
2009/7/14	Revise main board P/N from 98-0350035-00LF to 98-0350035-10LF	Camille
2009/7/30	Revise cutter module P/N from 98-0350013-00LF to 98-0350036-10LF	Camille
2009/8/11	Revise media guide bar P/N from 32-0350005-00LF to 98-0350034-00LF	Camille
2009/10/19	Revise main board P/N from 98-0350035-10LF to 98-0350035-20LF	Camille
2010/1/14	Revise black-mark sensor assembly P/N from 98-0350012-00LF to 98-0350012-10LF	Camille
2010/4/15	Add the minimum order quantity for some items	Camille
2010/4/29	Add GPIO with multi-interface board assembly P/N: 98-0240040-10LF (Factory option)	Camille
2010/5/12	* Revise power cord(US) P/N from 72-0050001-00LF to 72-0180100-00LF * Revise power cord(EU 90D) P/N from 72-0050007-10LF to 72-0180100-01LF * Remove power cord(EU 180D) P/N 2-0050007-00LF * Revise power cord(UK) P/N from 72-0050010-10LF to 72-0180100-02LF * Revise power cord(AU) P/N from 72-0050011-10LF to 72-0180100-03LF * Revise power cord(JP) P/N from 72-0180003-00LF to 72-0180100-04LF	Camille
2010/7/20	Revise black-mark sensor assembly P/N from 98-0350012-10LF to 98-0350012-20LF	Camille
2010/10/14	Revise platen holder P/N from 32-0350030-00LF to 32-0350030-10LF	Camille
2010/10/29	* Revise multi-interface board assembly P/N from 98-0240040-11LF to 98-0240044-01LF * Revise GPIO with multi-interface board assembly P/N from 98-0240040-10LF to 98-0240044-00LF	Camille
2010/11/17	* Revise ribbon sensor assembly P/N from 98-0350005-00LF to 98-0350005-10LF * Revise gap sensor assembly P/N from 98-0350011-00LF to 98-0350011-10LF	Camille

	* Revise black-mark sensor assembly P/N from 98-0350012-20LF to 98-0350012-30LF	
2011/1/25	Modify TSC address	Camille
2011/2/11	Modify section 5	Camille
2011/3/11	Modify electronics cover P/N from 32-0350051-00LF to 98-0350027-00LF	Camille
2011/4/22	Modify interface plate P/N from 32-0240006-10LF to 32-0240006-20LF	Camille
2011/5/19	Modify media fixing tab P/N from 30-0350014-00LF to 30-0410018-00LF	Camille
2011/5/23	Modify interface plate P/N from 32-0240006-10LF to 32-0240006-20LF	Camille
2011/6/8	Modify interface plate P/N from 32-0240006-20LF to 32-0240006-21LF	Camille
2011/7/18	Modify power supply unit P/N from 62-0350001-00LF to 62-0410350-10LF	Camille
2011/7/25	Modify LCD panel assembly P/N from 98-0240046-00LF to 98-0240046-01LF	Camille
2011/7/27	Add the print engine top mechanism assembly P/N 98-0350007-01LF(for RMA)	Camille
2012/1/31	Add the heavy duty cutter module P/N 98-0350036-11LF	Camille
2012/2/6	Add the DC motor, ribbon take up sensor assembly and ribbon supply sensor assembly part number	Camille
2012/3/6	Modify platen roller assembly P/N from 98-0350033-00LF to 98-0350033-10LF	Cinya
2012/12/12	Add Bluetooth module 99-125A041-00LF	Tina
2012/12/19	Modify top right side cover P/N from 98-0350021-00LF to 98-0350021-03LF	Tina
2013/5/14	* Modify multi-interface board assembly P/N from 98-0240044-01LF to 98-0240044-11L * Modify GPIO with multi-interface board assembly P/N from 98-0240044-00LF to 98-0240044-10L	Camille
2013/5/24	Modify print engine lower mechanism assembly P/N from 98-0350008-00LF to 98-0350008-10LF	Camille
2013/7/2	Modify media fixing tab P/N from 30-0410018-00LF to 30-0410018-10LF	Camille
2013/7/15	* Modify print head release lever (Left) P/N from 30-0240032-10LF to 30-0240032-20LF * Modify print head release lever (Right) P/N from 30-0240031-10LF to 30-0240031-20LF	Camille
2013/7/24	Modify main board P/N from 98-0350035-20LF to 98-0350035-30LF	Camille
2014/1/3	Modify DC motor P/N from 65-0180003-00LF to 65-0180003-10LF	Camille
2014/1/6	Modify main board P/N from 98-0350035-30LF to 98-0350035-40LF	Camille

2014/9/30	Modify main board P/N from 98-0350035-40LF to 98-0350035-41LF	Camille
2014/12/31	Modify RS-232 cable P/N from 72-0050002-01LF to 72-0050002-00LF	Camille
2015/3/2	Modify print head release lever (Left) P/N from 30-0240032-20LF to 30-0240032-30LF	Camille
2015/4/2	Add new power supply unit P/N 98-0410075-00LF	Camille
2015/7/28	Modify black mark sensor assembly P/N from 98-0350012-30LF to 98-0350012-40LF	Camille
2015/8/5	* Modify power cord/JP P/N from 72-0180100-04LF to 72-0180100-14LF * Add power cord P/N for CH, CN, BR and KR	Camille
2015/12/10	Modify power cord (CN) P/N from 72-0180100-08LF to 72-0180100-0DLF	Camille
2016/4/7	Modify gap sensor assembly P/N from 98-0350011-10LF to 98-0350011-20LF	Camille
2016/4/26	Modify main board P/N from 98-0350035-41LF to 98-0350035-51LF	Camille

TSC Auto ID Technology Co., Ltd.

Corporate Headquarters
9F., No.95, Minquan Rd., Xindian Dist.,
New Taipei City 23141, Taiwan (R.O.C.)
TEL: +886-2-2218-6789
FAX: +886-2-2218-5678
Web site: www.tscprinters.com
E-mail: printer_sales@tscprinters.com
tech_support@tscprinters.com

Li Ze Plant
No.35, Sec. 2, Ligong 1st Rd., Wujie Township,
Yilan County 26841, Taiwan (R.O.C.)
TEL: +886-3-990-6677
FAX: +886-3-990-5577