SAMSUNG TECHWIN

HD

Protect your asset

720p HD AIO Accessory Camera

SDC-8440BC

720p High Definition Outdoor Camera

- 720p high definition resolution
- 100˚ wide angle of view
- True Day & Night with ICR for perfect color reproduction



720p High Definition Outdoor Camera

SDC-8440BC







	SDC-8440BC
VIDEO	
Imaging Device	1/3" 1M CMOS
Effective Pixels	1280(H) x 960(V)
Scanning System	Progressive, 30fps (NTSC) / 25fps (PAL)
Synchronization	Internal
Min. Illumination	0Lux (IR LED on)
Camera Output	1CH BNC, Maximum Transmission Length : 300m (75Ω 3C2V)
Min. Cable Length	60ft (18.3m) included
LENS	
Focal Length	3.6mm
Max. Aperture Ratio	F1.8
Angular Field of View	H : 78˚ / V : 62.5˚ / D : 100˚
OPERATIONAL	
Shutter Mode	Auto (Rolling shutter)
Gain Control	Auto
White Balance	Auto (1,800°K ~ 10,500°K)
Digital Noise Reduction	3D DNR
Flickerless	Auto
Day & Night	True Day & Nigh (ICR)
IR Distance (850nm)	25m (82ft)
ENVIRONMENTAL	
Operating Temperature / Humidity	-10°C ~ +50°C (+14°F ~+122°F) / Less than 90% RH
Ingress Protection	IP66
ELECTRICAL	
Input Voltage	12V DC
Power Consumption	Max. 4W
MECHANICAL	
Color / Material	White / Plastic (Body), Metal (Mount)
Dimensions (WxHxD)	61.8 x 61.8 x 140.0mm (2.43" x 2.43" x 5.51")
Weight	194g (0.43 lb)
CAMERA PACKAGE	
Dimensions (WxHxD)	276.0 x 106.0 x 78.0mm (10.87" x 4.17" x 3.07")
Weight	742g (1.64 lb)

Kit Contents

- Camera (SDC-8440BC) 1pcs
- 60ft BNC Cable 1pcs
- Plastic Achors / Screws
- User Manual

Dimensions

Unit : mm (inch)

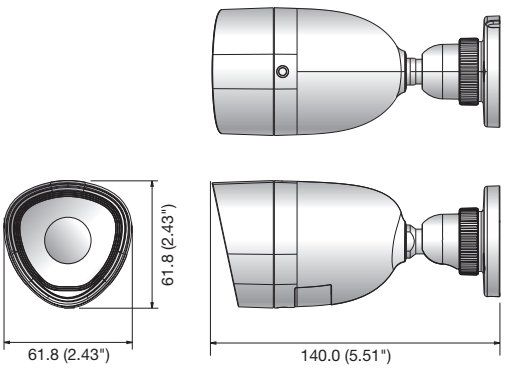

Design and specifications are subject to change without notice.

The Eco mark represents Samsung Techwin's will to create environment-friendly products, and indicates that the product satisfies the EU RoHS Directive.

SAMSUNG TECHWIN CO., LTD.
6, Pangyo-ro 319beon-gil, Bundang-gu, Seongnam-si, Gyeonggi-do, SEOUL 463-400 Rep. of KOREA
Tel : +82-70-7147-8753, 8764 Fax : +82-31-8018-3740 www.samsung**security**.com www.samsung**cctv**.com
COPYRIGHT BY SAMSUNG TECHWIN. ALL RIGHT RESERVED

SAMSUNG TECHWIN AMERICA Inc.
100 Challenger Rd. Suite 700 Ridgefield Park, NJ 07660
Toll Free : +1-877-213-1222 Direct : +1-201-325-6920
Fax : +1-201-373-0124
www.samsung-security.com

SAMSUNG TECHWIN EUROPE LTD.
2nd Floor, No. 5 The Heights, Brooklands, Weybridge, Surrey, KT13 0NY, UK
Tel : +44-1932-82-6700 Fax : +44-1932-82-6701
www.samsungsecurity.co.uk

SHANGHAI SAMSUNG TECHWIN CO., LTD.
32F, Blk B, New Caohejing International Business Center, No. 391 Guiping Rd., Shanghai, China, 200233
Tel : +86-21-5427-1155 Fax : +86-21-5423-5122
www.samsungsecurity.cn

SAMSUNG TECHWIN