PHILIPS

Lighting



MASTERColour CDM-Rm Elite Mini

MASTERColour CDM-Rm Elite Mini 35W/930 GX10 MR16 40D

Mini, very high-efficiency Ceramic Metal Halide discharge reflector lamp producing crisp white sparkling light with high colour rendering

Product data

General Information	
Cap base	GX10 [GX10]
Operating position	UNIVERSAL [Any/Universal]
Life to 5% failures (nom.)	9000 h
Life to 10% failures (nom.)	10000 h
Life to 20% failures (nom.)	12000 h
Life to 50% failures (nom.)	15000 h
ANSI code HID	C130/O
Switching cycle	1350X

Light Technical	
Colour code	930 [CCT of 3000K]
Beam Angle (Nom)	40 °
Beam angle technical	42 °
Beam angle technical	50 °
Beam angle technical	34 °
Luminous intensity (min.)	2700 cd
Luminous intensity (nom.)	3600 cd
Beam description	-
Lumen maintenance 12,000 hours (nom.)	85 %
Lumen maintenance 2,000 hours (nom.)	95 %
Lumen maintenance 4,000 hours (nom.)	93 %
Chromaticity coordinate X (nom.)	0.439
Chromaticity coordinate Y (nom.)	0.403
Correlated colour temperature (nom.)	3000 K
Luminous efficacy (rated) (nom.)	61 lm/W
Color rendering index (min.)	88
Color rendering index (nom.)	91
LLMF at end of nominal lifetime (nom.)	80 %
Luminous Flux In 90° Cone (Rated)	2150 lm

Operating and Electrical	
Power (Rated) (Nom)	39 W
Re-ignition time (min.) (max.)	15 min
Warm-up time to 60% light (nom.)	120 s
Ignition time (max.)	30 s
Voltage (Max)	95 V
Voltage (Min)	79 V
Voltage (Nom)	87 V

MASTERColour CDM-Rm Elite Mini

Controls and Dimming	
Dimmable	no
Run-up time 90% (max.)	3 min

Mechanical and Housing	
Bulb finish	- [-]

Approval and Application	
Energy efficiency label (EEL)	A
Mercury (Hg) content (nom.)	4.7 mg
Energy Consumption kWh/1000 h	43 kWh

UV	
PET (NIOSH) (min.)	8 h/500lx
Damage factor D/fc (max.)	0.4

Luminaire Design Requirements	
Reflector neck temperature (max.)	315 °C

Product Data	
Full product code	871829116306000
Order product name	MASTERColour CDM-Rm Elite Mini 35W/930 GX10 MR16 40D
EAN/UPC – product	8718291163060
Order code	16306000
Local Code	35CDMRMELI93040
Numerator – quantity per pack	1
Numerator – packs per outer box	12
Material no. (12NC)	928194805330
Net weight (piece)	0.048 kg
ILCOS Code	MRS/UB-35/930-H-GX10-51/54.5/40

Warnings and Safety

- Use only with electronic control gear
- Control gear must include end-of-life protection (IEC61167, IEC 62035)

Dimensional drawing

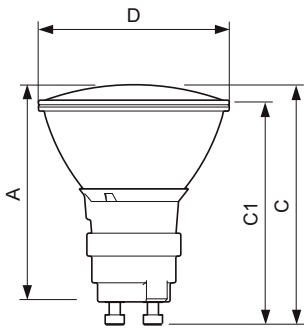

CDM-Rm 35W/930 GX10 MR16 40D

Product	D (max)	D	C (max)	C	C1 (max)	A (max)
MASTERColour CDM-Rm Elite Mini 35W/930 GX10 MR16 40D	51 mm	50 mm	65.4 mm	62.75 mm	60.9 mm	59 mm

MASTERColour CDM-Rm Elite Mini

Photometric data

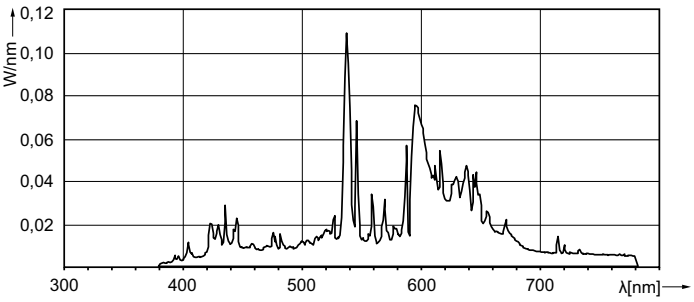

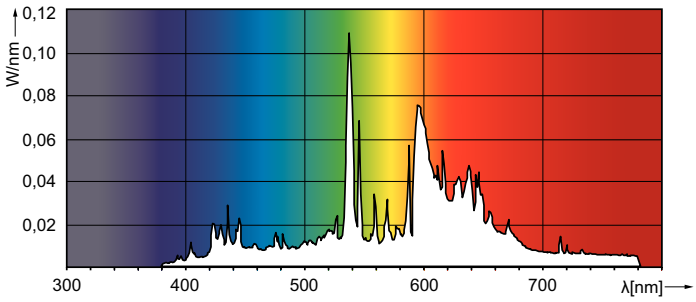

© 2017 Philips Lighting Holding B.V. All rights reserved. Philips Lighting reserves the right to make changes in specifications and/or to discontinue any product at any timewithout notice or obligation and will not be liable for any consequences resulting from the use of this publication.