

Halogen reflector

13096 ELH 300W GY5.3 120V 1CT/24

Quartz halogen lamps with integral reflector which serves as an efficient mirror condenser system

Product data

• General Information

Cap base	GY5.3 [GY5.3]
Philips code	13096
ANSI Code	ELH
Operating position	S90 [Standing +/-90D or Base Down (BDH)]
Main application	Projection
Life to 50% failures (nom.)	35 h

• Light Technical

Luminous flux (rated) (nom.)	850 lm
Correlated colour temperature (nom.)	3350 K
Color rendering index (nom.)	100

• Operating and Electrical

Power (Rated) (Nom)	300 W
Voltage (Nom)	120 V

• Controls and Dimming

Dimmable	yes

• Mechanical and Housing

Bulb material	Quartz-UV Open
Filament dimensions WxH	-

• Luminaire Design Requirements

Bulb temperature (max.)	900 °C
Pinch temperature (max.)	350 °C
Working distance WD	152.4 mm

• Product Data

Full product code	871150041057330
Order product name	13096 ELH 300W GY5.3 120V 1CT/24
EAN/UPC – product	8711500410573
Order code	41057330
Local Code	ELH
Numerator – quantity per pack	1
Numerator – packs per outer box	24
Material no. (12NC)	923920936394
Net weight (piece)	0.026 kg

PHILIPS

Halogen reflector

Dimensional drawing

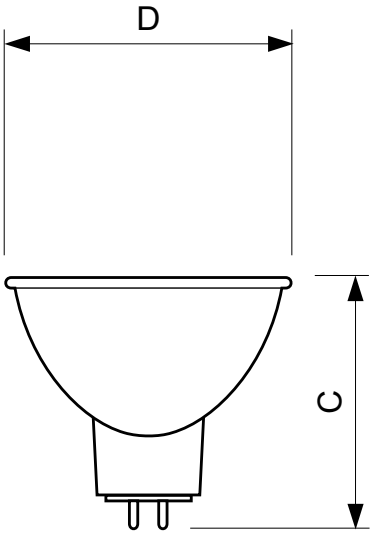

GX5.3, GY5.3, GZ6.35



13096 ELH 300W GY5.3 120V

Product	D	C
13096 ELH 300W GY5.3 120V 1CT/24	50.7 mm	44.5 mm

© 2016 Philips Lighting Holding B.V.
All rights reserved.

Specifications are subject to change without notice. Trademarks are the property of Koninklijke Philips N.V. (Royal Philips) or their respective owners.

www.philips.com/lighting

2016, October 10
data subject to change