DW60J9970 Series

Dishwasher

installation guide

STOP	**These installation instructions are intended for use by qualified installers.**
	If you are having problems installing this dishwasher, contact a service center as referring to the contact list on the back cover. **For assistance: www.samsung.com**

Planet First 100% Recycled Paper

This manual is made with 100% recycled paper.

imagine the possibilities

Thank you for purchasing this Samsung product.

DD68-00167A-00

SAMSUNG

FBI_DW9000H-Series-00167A-00_EN (U.K).indd 1 2015-02-24 12:32:49

Safety instructions

Congratulations on your new Samsung dishwasher. This manual contains important information on the installation, use and care of your appliance. Please take time to read this manual to take full advantage of your dishwasher's many benefits and features.

WHAT YOU NEED TO KNOW ABOUT SAFETY INSTRUCTIONS

Please read this manual thoroughly to ensure that you know how to safely and efficiently operate the extensive features and functions of your new appliance and retain it in a safe place near the appliance for your future reference. Use this appliance only for its intended purpose as described in this user manual.

Warning and important safety instructions in this manual do not cover all possible conditions and situations that may occur. It is your responsibility to use common sense, caution, and care when installing, maintaining, and operating your dishwasher.

Because the following operating instructions cover various models, the characteristics of your dishwasher may differ slightly from those described in this manual and not all warning signs may be applicable. If you have any questions or concerns, contact your nearest service center or find help and information online at www.samsung.com.

IMPORTANT SAFETY SYMBOLS AND PRECAUTIONS

Important safety symbols

WARNING	Hazards or unsafe practices that may result in severe personal injury and/or property damage.
CAUTION	Hazards or unsafe practices that may result in personal injury and/or property damage.
CAUTION	To reduce the risk of fire, explosion, electric shock, or personal injury when using your dishwasher, follow these basic safety precautions:
	Do NOT attempt.
	Do NOT disassemble.
	Do NOT touch.
	Follow directions explicitly.
	Unplug the power plug from the wall socket.
	Make sure the appliance is grounded to prevent electric shock.
	Call the service centre for help.
	Note

These warning symbols are here to prevent injury to you and others.
Please follow them explicitly.

Keep these instructions in a safe place and ensure that new users are familiar with the content. Pass them on to any future owner.

FBI_DW9000H-Series-00167A-00_EN (U.K).indd 2 2015-02-24 12:32:52

Important safety precautions

This appliance conforms to current safety requirements. Inappropriate use can, however, lead to personal injury and damage to property.
To avoid the risk of accidents and damage to the appliance, please read these instructions carefully before using it for the first time. They contain important information on its safety, use and maintenance.

CAUTION As with any equipment using electricity and moving parts, potential hazards exist. To safely operate this appliance, become familiar with its operation and exercise care when using it.

WARNING Do not let children (or pets) play on or in your dishwasher. The dishwasher door does not open easily from the inside, and children may be seriously injured if trapped inside.

WARNING Children should be supervised to ensure that they do not play with the appliance.

CAUTION If the plug (power supply cord) is damaged, it must be replaced by the manufacturer or its service agent or a similarly qualified person in order to avoid a hazard.

This appliance must be positioned to be accessible to the power plug after installation, the water supply tabs and the drain pipes.

INSTRUCTION ABOUT THE WEEE MARK



Correct Disposal of This Product (Waste Electrical & Electronic Equipment)

(Applicable in countries with separate collection systems)

This marking on the product, accessories or literature indicates that the product and its electronic accessories (e.g. charger, headset, USB cable) should not be disposed of with other household waste at the end of their working life. To prevent possible harm to the environment or human health from uncontrolled waste disposal, please separate these items from other types of waste and recycle them responsibly to promote the sustainable reuse of material resources.

Household users should contact either the retailer where they purchased this product, or their local government office, for details of where and how they can take these items for environmentally safe recycling.

Business users should contact their supplier and check the terms and conditions of the purchase contract. This product and its electronic accessories should not be mixed with other commercial wastes for disposal.

FBI_DW9000H-Series-00167A-00_EN (U.K).indd 3 2015-02-24 12:32:52

Safety instructions

INSTRUCTIONS WHEN USING YOUR DISHWASHER

This dishwasher is not designed for commercial use. It is intended for use in domestic households and in similar working and residential environments such as:

- Shops
- Offices and showrooms

and by residents in establishments such as:

- Hostels and guest houses.

It must only be used as a domestic appliance as specified in these user manual, for cleaning domestic crockery and cutlery.
Any other usage is not supported by the manufacturer and could be dangerous.

The manufacturer cannot be held liable for damage resulting from incorrect or improper use or operation.

WARNING Do not use solvents in the dishwasher. Danger of explosion.

WARNING Do not inhale or ingest dishwasher detergent. Dishwasher detergents contain irritant or corrosive ingredients which can cause burning in the nose, mouth and throat if swallowed, or inhibit breathing. Consult a doctor immediately if detergent has been swallowed or inhaled.

CAUTION Avoid leaving the door open unnecessarily, as you could trip over it.

CAUTION Do not sit or lean on the opened door. This could cause the dishwasher to tip and be damaged, and you could get injured.

Only use detergent and rinse aid formulated for domestic dishwashers. Do not use washing-up liquid.

Do not fill the rinse aid reservoir with powder or liquid detergent. This will cause serious damage to the reservoir.

CAUTION Inadvertently filling the salt reservoir with powder or liquid dishwasher detergent will damage the water softener. Make sure you have picked up the correct packet of dishwasher salt before filling the salt reservoir.

Please only use special coarse grained dishwasher salt for reactivation, as other salts may contain insoluble additives which can impair the functioning of the softener.

CAUTION In an appliance with a cutlery basket (depending on model), cutlery is cleaned and dried more if placed in efficiently the basket with the handles downwards. However, to avoid the risk of injury, place knives and forks etc. with the handles upwards.

Plastic items which cannot withstand being washed in hot water, such as disposable plastic containers, or plastic cutlery and crockery should not be cleaned in the dishwasher.
The high temperatures in the dishwasher may cause them to melt or lose shape.

On models with Delay Start function, make sure that the dispenser is dry before adding detergent. Wipe dry if necessary. Detergent will clog if poured into a damp dispenser and may not be thoroughly dispersed.

WARNING Knives and other utensils with sharp points must be loaded in the basket with their points down or placed in a horizontal position.

INSTRUCTIONS FOR PROTECTING YOUR CHILDREN

WARNING This appliance is not a toy! To avoid the risk of injury, keep children well away and do not allow them to play in or around the dishwasher or to use the controls. They will not understand the potential dangers posed by it. They should be supervised whenever you are working in the kitchen.
There is also a danger that children playing might shut themselves in the dishwasher.

FBI_DW9000H-Series-00167A-00_EN (U.K).indd 4 2015-02-24 12:32:52

WARNING This appliance can be used by children aged from 8 years and above and persons with reduced physical, sensory or mental capabilities or lack of experience and knowledge if they have been given supervision or instruction concerning use of the appliance in a safe way and understand the hazards involved. Children shall not play with the appliance.
Cleaning and user maintenance shall not be made by children without supervision.

WARNING Older children may only use the dishwasher when its operation has been clearly explained to them and they are able to use it safely, recognising the dangers of misuse.

WARNING KEEP CHILDREN AWAY FROM DETERGENTS! Dishwasher detergents contain irritant and corrosive ingredients which can cause burning in the mouth, nose and throat if swallowed, or inhibit breathing.
Keep children away from the dishwasher when the door is open.
There could still be detergent residues in the cabinet.
Consult a doctor immediately if your child has swallowed or inhaled detergent.

INSTRUCTIONS FOR INSTALLING YOUR DISHWASHER

WARNING Before setting up the appliance, check it for any externally visible damage. Under no circumstances should you use a damaged appliance. A damaged appliance could be dangerous.

CAUTION The dishwasher must only be plugged into the electricity supply via a suitable switched socket. The electrical socket must be easily accessible after the dishwasher is installed so that it can be disconnected from the electricity supply at any time.

WARNING There must be no electrical sockets behind the dishwasher. Danger of overheating and fire risk if the dishwasher were to be pushed up against a plug.

WARNING The dishwasher must not be installed under a hob. The high radiant temperatures which are sometimes generated by a hob could damage the dishwasher. For the same reason it should not be installed next to open fires or other appliances which give off heat, such as heaters etc.

Do not connect the dishwasher to the mains supply until it has been fully installed and any adjustment has been made to the door springs.

CAUTION Before connecting the appliance, check that the connection data on the data plate (voltage and connected load) match the mains electricity supply. If in any doubt, consult a qualified electrician.

The electrical safety of this appliance can only be guaranteed when continuity is complete between it and an effective grounding system. It is most important that this basic safety requirement is present and regularly tested and where there is any doubt the electrical system in the house should be checked by a qualified electrician.
The manufacturer cannot be held liable for the consequences of an inadequate grounding system (e.g. electric shock).

CAUTION Do not connect the appliance to the mains electricity supply by a multi-socket unit or an extension lead. These do not guarantee the required safety of the appliance (e.g. danger of overheating).

This appliance may only be installed in mobile installations such as ships if a risk assessment of the installation has been carried out by a suitably qualified engineer.

CAUTION The plastic housing of the water connection contains an electrical component. The housing must not be submerged in water.

There are electrical wires in the hose of Aqua-Stop. Never cut the water inlet hose, even if it is too long.

Installation, maintenance and repairs may only be carried out by a suitably qualified and competent person in strict accordance with current national and local safety regulations. Repairs and other work by unqualified persons can be dangerous. The manufacturer cannot be held liable for unauthorised work.

CAUTION Do not push the appliance into a built-in closet or cabinet using your knees or legs. This may damage the appliance.

FBI_DW9000H-Series-00167A-00_EN (U.K).indd 5 2015-02-24 12:32:53

Safety instructions

CAUTION The integrated waterproof system offers protection from water damage, provided the following conditions are met:

- The dishwasher is correctly installed and plumbed in.
- The dishwasher is properly maintained and parts are replaced where it can be seen that this is necessary.
- The stopcock has been turned off when the appliance is not used for a longer period of time (e.g. during holidays).
- The waterproof system will work even if the appliance is switched off. However, the appliance must remain connected to the electricity supply.

WARNING A damaged appliance can be dangerous. If the dishwasher gets damaged, switch it off at the mains and call your dealer or the service department.

Unauthorised repairs could result in unforeseen dangers for the user, for which the manufacturer cannot accept liability. Repairs should only be undertaken by an approved service technician.

Faulty components must only be replaced by original spare parts. Only when these parts are fitted can the safety of the appliance can be guaranteed.

Always disconnect the dishwasher from the electrical supply for maintenance work (switch off at the wall socket and remove the plug).

CAUTION If the connection cable is damaged it must be replaced with a special cable, available from the manufacturer. For safety reasons, this must only be fitted by the service department or an authorised service technician.

WARNING In countries where there are areas which may be subject to infestation by cockroaches or other vermin, pay particular attention to keeping the appliance and its surroundings in a clean condition at all times. Any damage which may be caused by cockroaches or other vermin will not be covered by the guarantee.

CAUTION In the event of a fault or for cleaning purposes, the appliance is only completely isolated from the electiricity supply when:

- it is switched off at the wall socket and the plug is withdrawn, or
- it is switched off at the mains, or
- the mains fuse is disconnected, or
- the screw-out fuse is removed (in countries where this is applicable).

Do not make any alterations to the appliance, unless authorised to do so by the manufacturer.

CAUTION Never open the casing/housing of the appliance.
Tempering with electrical connections or components and mechanical parts is highly dangerous and can cause operational faults or electric shock.

While the appliance is under guarantee, repairs should only be undertaken by a service technician authorised by the manufacturer. Otherwise the guarantee will be invalidated.

CAUTION When installing the product, make sure there is space at the top, left, right and back of the product to ensure proper ventilation.

WARNING This appliance is not to be used by persons (including children) with reduced physical, sensory or mental capabilities, or lack of experience and knowledge, unless they have been given supervision or instruction concerning use of the appliance by a person responsible for their safety.

CAUTION For appliances with ventilation openings in the base, that a carpet must not obstruct the openings.

CAUTION In order to avoid a hazard due to inadvertent resetting of the thermal cut-out, this appliance must not be supplied through an external switching device, such as a timer, or connected to a circuit that is regularly switched on and off by the utility.

CAUTION The door should not be left in the open position since this could present a tripping hazard.

FBI_DW9000H-Series-00167A-00_EN (U.K).indd 6 2015-02-24 12:32:53

Contents

PREPARING THE DISHWASHER ENCLOSURE 8

8 Product and enclosure dimensions

BEFORE INSTALLING YOUR DISHWASHER 9

9 Checking the parts and tools

INSTALLING YOUR DISHWASHER 11

11 STEP 1. Selecting the best location for the dishwasher
12 STEP 2. Checking water supply and electrical requirements
13 STEP 3. Preparing the dishwasher
14 STEP 4. Preparing the custom panel
15 STEP 5. Installing the custom panel
17 STEP 6. Leveling the dishwasher
18 STEP 7. Securing the dishwasher
21 STEP 8. Connecting the drain hose
22 STEP 9. Completing the installation

SPECIFICATIONS 23

23 Specifications

FBI_DW9000H-Series-00167A-00_EN (U.K).indd 7 2015-02-24 12:32:53

Preparing the dishwasher enclosure

PRODUCT AND ENCLOSURE DIMENSIONS

This dishwasher is designed to be enclosed on the top and on both sides by a standard residential kitchen cabinet unit.

The installation enclosure must be clean and free of any obstructions.

The enclosure must be at least 600 mm wide, 575 mm deep, and 820 mm high.

For the front door of the dishwasher to be flush with the leading edge of the counter top, the counter top must be at least 575 mm deep.

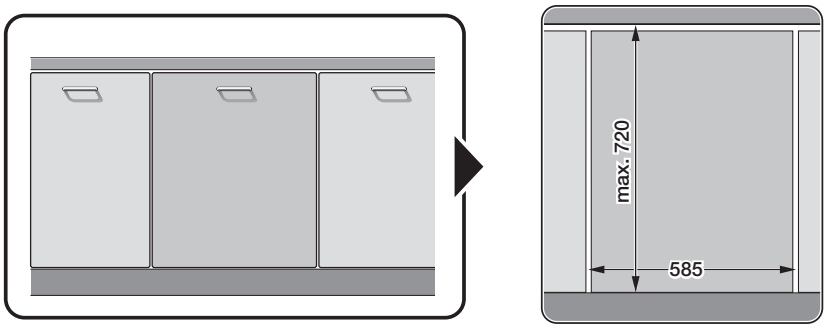

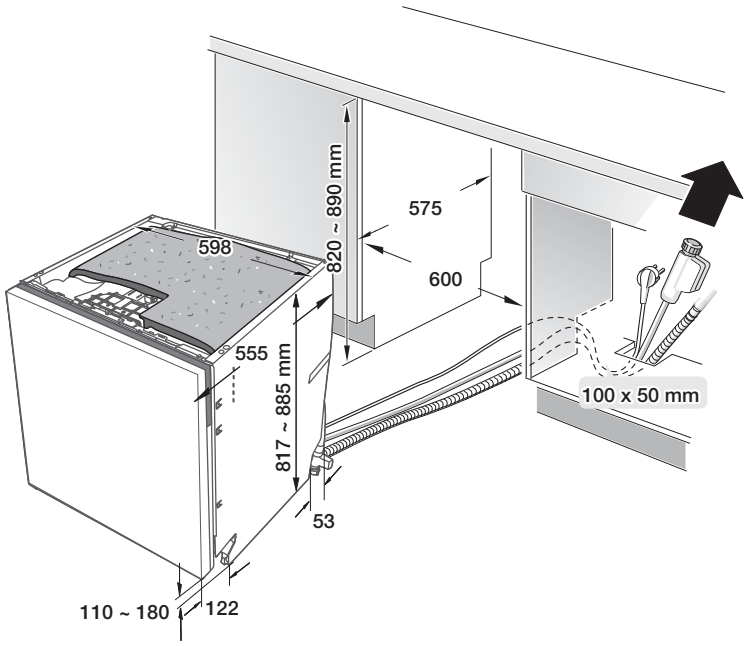

FBI_DW9000H-Series-00167A-00_EN (U.K).indd 8 2015-02-24 12:32:53

Before installing your dishwasher

CHECKING THE PARTS AND TOOLS

Before starting on the installation, prepare all the necessary tools and parts required to install the dishwasher. This will save installation time and simplify the installation process.

Parts required

Provided with the dishwasher. Check when you unpack your dishwasher.

1	Installation brackets (2)		6	Ø 4 X 43 screws (4)	
2	Custom panel fixers (2)		7	Foot Sub (1)	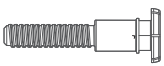
3	Ø 4 X 12 screws (6)	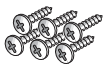	8	Protective sticker	
4	Ø 4 X 20 screws (2)		9	Rubber skirt	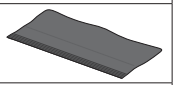
5	Ø 4 X 16 screws (2)				

Not provided with the dishwasher.

10	Hose clamp		12	Rubber connector	
11	Air gap		13	Teflon® tape or sealing compound	

FBI_DW9000H-Series-00167A-00_EN (U.K).indd 9 2015-02-24 12:32:53

Before installing your dishwasher

Tools required

13	Electric drill	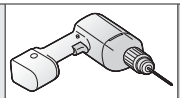	21	Tape measure	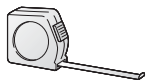
14	Safety glasses		22	Pencil	
15	Gloves		23	Phillips screwdriver	
16	Flashlight	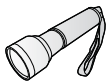	24	Flat screwdriver	
17	Adjustable wrench		25	Tubing cutter	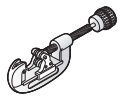
18	Torx T20	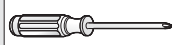	26	Cutting knife	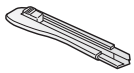
19	Pliers	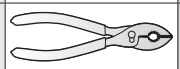	27	Level	
20	Nipper	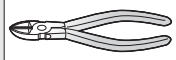	28	Hole saw	

FBI_DW9000H-Series-00167A-00_EN (U.K).indd 10 2015-02-24 12:32:54

Installing your dishwasher

Be sure that you or your installer follow these instructions closely so that your new dishwasher works properly and that you're not at risk of injury when washing dishes.

New installation

If the dishwasher is a new installation, most of the installation work must be done before the dishwasher is moved into place.

Replacement

If the dishwasher is replacing an old dishwasher, you must check the exising dishwasher connections for compatibility with the new dishwasher. Replace the existing connections as necessary.

STEP 1. SELECTING THE BEST LOCATION FOR THE DISHWASHER

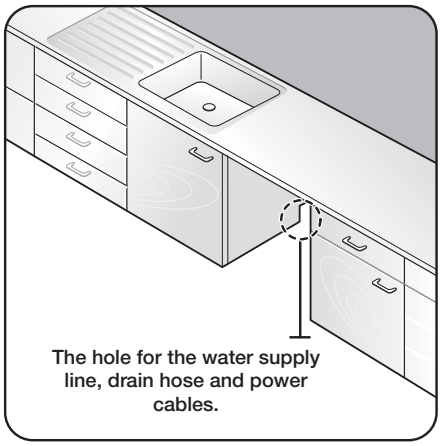

The hole for the water supply line, drain hose and power cables.

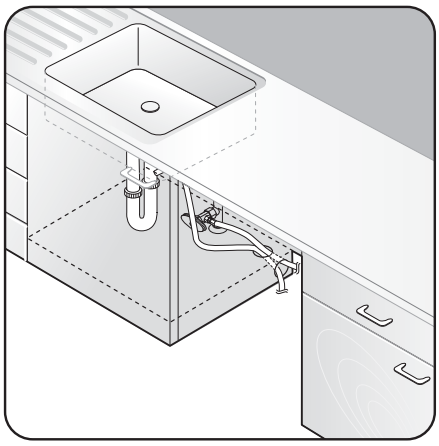

The following criteria are important to ensure the best location for the dishwasher:

- The location must have a solid floor that is able to support the weight of the dishwasher.
- The location must be near a sink with easy access to the water supply, drain, and electrical outlet.

  To ensure smooth draining, place the drain hose at a height of 30 ~ 80 cm.
- The location must let you load your dishes into the dishwasher easily.
- The location must have sufficient space for the dishwasher door to open easily and provide enough space between the dishwasher and the cabinet sides (at least 2 mm).
- The wall at the back must be free of obstructions.

If this is a new installation, follow these steps:

1. Using a hole saw, cut a hole into the side of the cabinet that holds the sink as shown.
2. If the base inside the sink cabinet is raised above the kitchen floor and is higher than the connections on the dishwasher, make a hole in the base inside the cabinet and in the cabinet side as shown.

Depending on where your electrical outlet is, you may need to cut a hole in the opposite cabinet side.

FBI_DW9000H-Series-00167A-00_EN (U.K).indd 11 2015-02-24 12:32:55

Installing your dishwasher

STEP 2. CHECKING WATER SUPPLY AND ELECTRICAL REQUIREMENTS

CAUTION
- The water supply line pressure must be between 0.05 ~ 0.8 MPa.
- Supply cold water only. Make sure that the water temperature does not exceed 60 ˚C.
- Do not supply hot water. Otherwise, the product may malfunction.

WARNING
- Use a rated power of 220 ~ 240 V / 50 Hz.
- Install the product while the power cord is unplugged.
- Use a power outlet with a maximum allowable current of 16 A. (The maximum current for this dish washer is 11 A.)
- When powering the dishwasher, ensure that your power supply has:
  - An AC 220-240 V / 50 Hz fuse or circuit breaker.
  - An individual branch circuit serving your dishwasher.
- After the installation, check if the power cord is not bent or damaged.

- Ensure that the water supply valve is turned off before connecting the water supply line to the dishwasher.
- Seal the water supply line connections using teflon tape or sealing compound to stop any water leakage.

FBI_DW9000H-Series-00167A-00_EN (U.K).indd 12 2015-02-24 12:32:55

STEP 3. PREPARING THE DISHWASHER

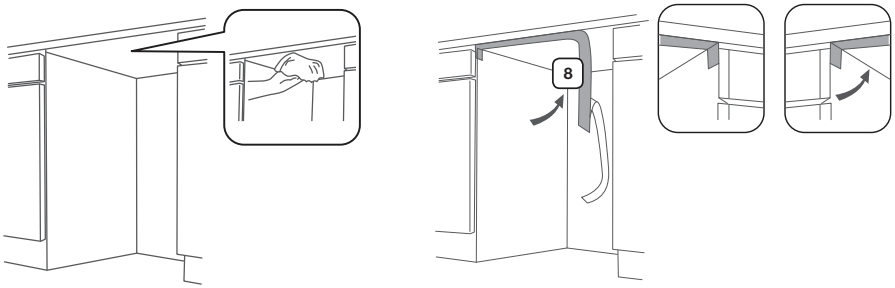

1. Install the Protective sticker [8].

Attach the Protective sticker to the bottom of the counter top as shown in the picture.

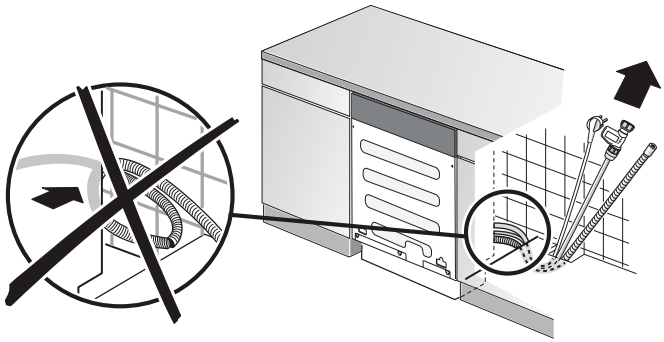

2. Push half the product into the space under the counter top.

If you push the entire product under the counter top, you will not be able to adjust both the front legs of the product in the next STEP.

3. Prepare the power cord, water supply hose and drain hose.

CAUTION
- Take care that you do not bend or fold the cord or hose.
- Do not connect the power cord until the installation of the dishwasher is complete.

4. Pull the power cord, water supply hose and drain hose through the hole to the sink as shown by the figure above.

FBI_DW9000H-Series-00167A-00_EN (U.K).indd 13 2015-02-24 12:32:55

Installing your dishwasher

STEP 4. PREPARING THE CUSTOM PANEL

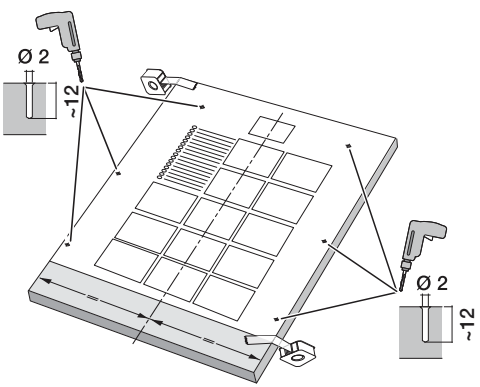

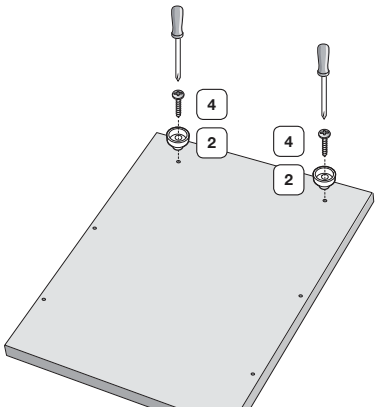

1. Place the supplied installation manual at the back of the custom panel (to be attached to the door of the product) to be installed and temporarily fix it using transparent tape.

   CAUTION
   - The top part of the supplied installation manual and the top part of the custom panel must be aligned.
   - Use a custom panel between 3~9 kg.

2. Pre-drill the 6 points marked on the installation manual with a 2-pi drill bit to a depth of 10~12 mm.
3. Remove the installation manual and assemble the supplied part [2] by fastening the 2 screws [4] to the top part as shown above.

FBI_DW9000H-Series-00167A-00_EN (U.K).indd 14 2015-02-24 12:32:55

STEP 5. INSTALLING THE CUSTOM PANEL

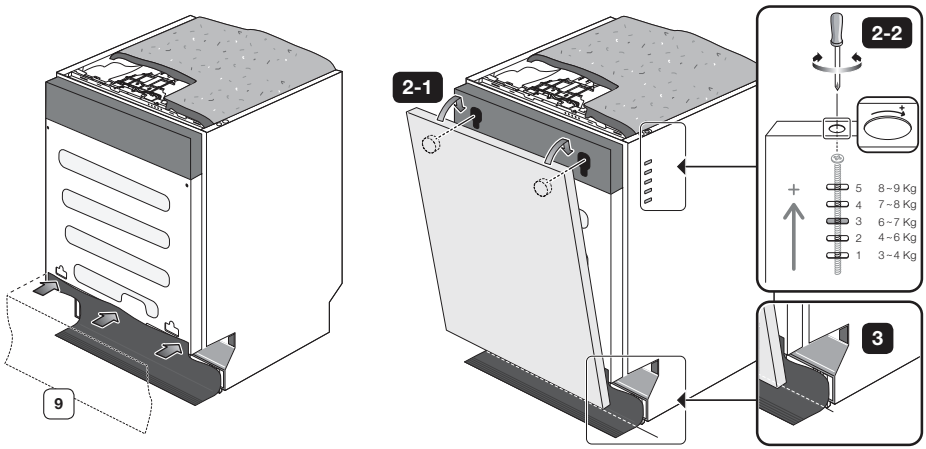

1. Install the supplied rubber skirt by inserting it into the 3 holes at the bottom of the door.

2. Install the custom panel prepared in STEP 3 to the door of the product.

1) Push part 2 assembled in STEP 4 into the hole at the top of the door as shown in the figure.

2) Press the custom panel downward to fix it to the door.

3) Adjust the spring level by turning the screw according to the weight of the custom panel referring to the following table.

The spring level according to the weight of the custom panel

Level	Recommended limit of additional weight (kg)
Level 1	3 ~ 4
Level 2	4 ~ 6
Level 3	6 ~ 7
Level 4	7 ~ 8
Level 5	8 ~ 9

FBI_DW9000H-Series-00167A-00_EN (U.K).indd 15 2015-02-24 12:32:55

Installing your dishwasher

3. Cut the rubber skirt installed in the previous step with a cutting knife as shown so that it is aligned with the front of the product. (Represented as a dashed line.)

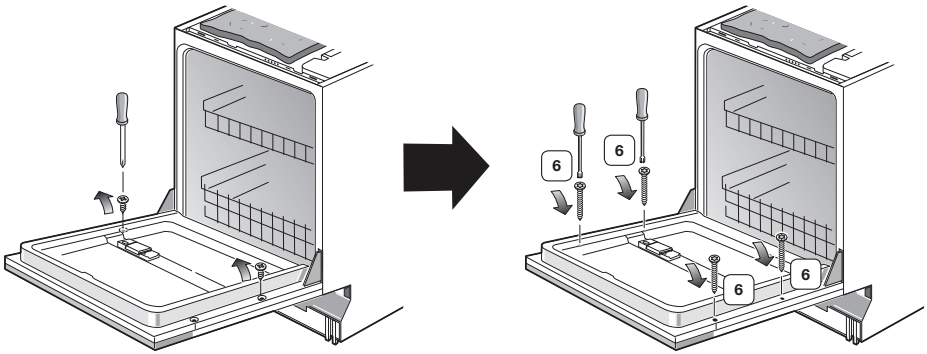

4. Open the door that has been assembled with the custom panel and remove the 2 screws that you fastened previously.

CAUTION Since the door might strongly open or close unexpectedly when you open the door if the spring level is not adjusted appropriately, take care that you do not injure yourself.

5. Assemble the custom panel and the door by fastening the 4 supplied screws [6].

FBI_DW9000H-Series-00167A-00_EN (U.K).indd 16 2015-02-24 12:32:56

STEP 6. LEVELING THE DISHWASHER

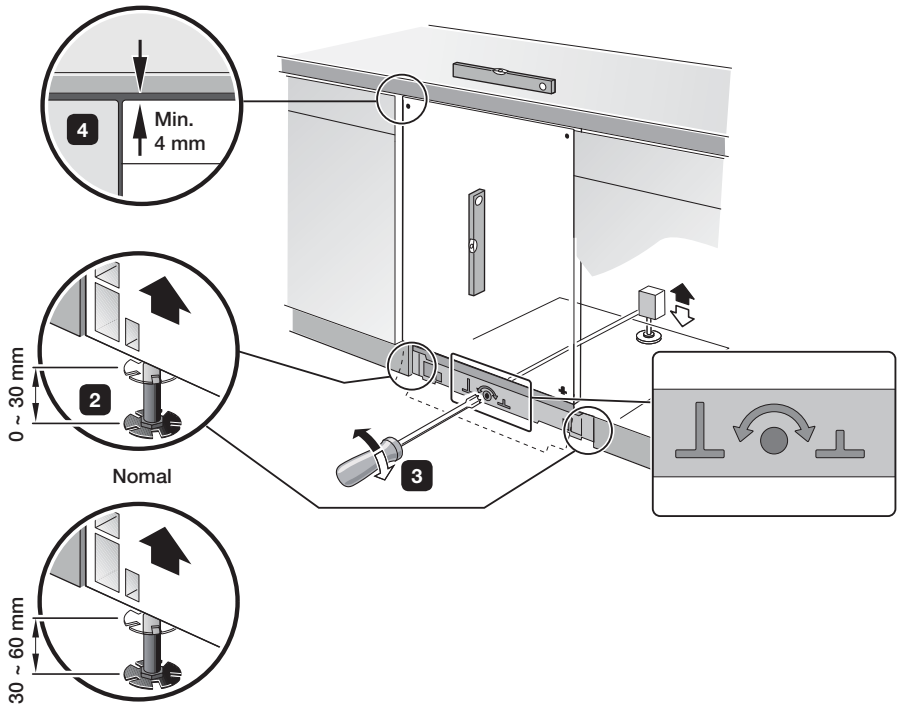

1. Make sure that the product is level using the leveler.
2. You can adjust the height of the front of the product by turning the legs at both ends of the bottom front of the product.
   1) Slightly lift up the front of the product (when put in half way) and turn the legs to adjust the height.
   2) You can adjust the height.
3. You can adjust the height of the front of the product by turning the legs with a Torx T20 screwdriver. Turn it clockwise to lower the height or turn it counterclockwise to raise the height.
4. Install the product so that there is a space of at least 4 mm between the top of the product and the bottom of the counter top.

When the leveling is complete, check if the inner door opens and closes without interfering with the tub.

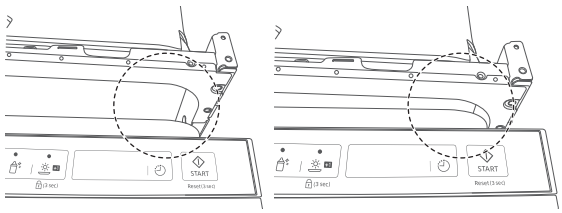

FBI_DW9000H-Series-00167A-00_EN (U.K).indd 17 2015-02-24 12:32:56

Installing your dishwasher

STEP 7. SECURING THE DISHWASHER

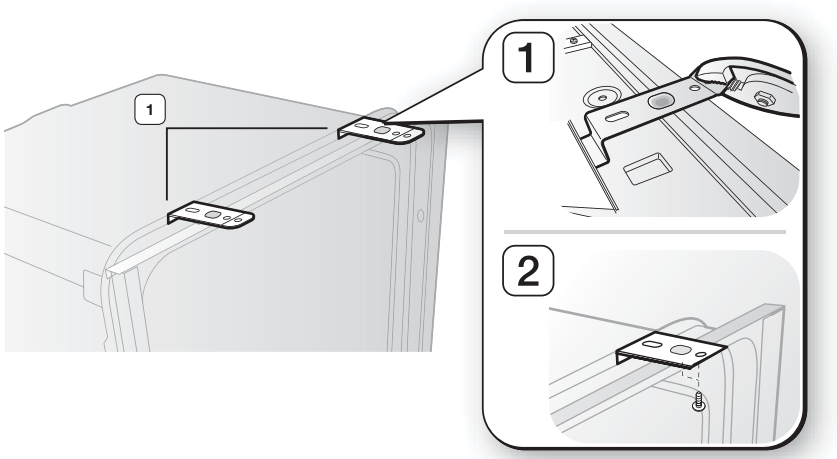

1. Hook the installation brackets into the holes as shown in the figure above.

When you fix the product at the sides instead of fixing it at the top, you do not need to use the installation brackets. In this case, please refer to the “B. To fix the product at the sides (when the material of the counter top is not appropriate for drilling)” section on page 20.

2. Insert the product into the place under the counter top completely again.

3. Ensure that the power cord, water supply hose or drain hose are bent or fold.

4. Connect the water supply hose.

CAUTION Do not open the water tap until the installation of the dishwasher is complete.

FBI_DW9000H-Series-00167A-00_EN (U.K).indd 18 2015-02-24 12:32:56

A. When the product is fixed to the counter top (when the material of the counter top is ideal for drilling)

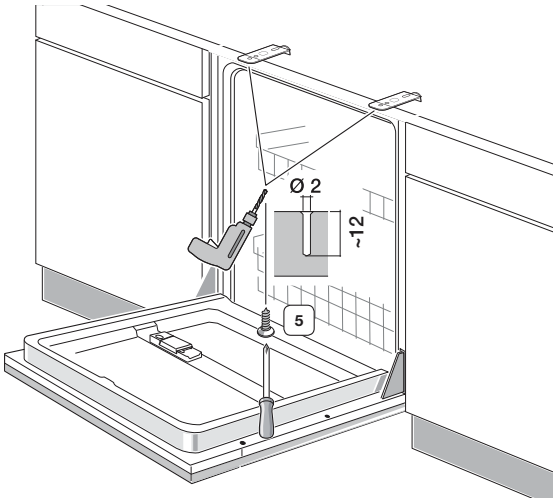

1. Pre-drill the overlapping holes of the installation brackets and the protector top with a 2-pi drill bit to a depth of 10~12 mm and then fasten the screws.

- If you fix the product to the top, 2 screws [5] out of the 6 screws will be remain.
- You can discard the remaining 2 screws or use them to fix the sides of the product for a more solid installation as following step.

FBI_DW9000H-Series-00167A-00_EN (U.K).indd 19 2015-02-24 12:32:56

Installing your dishwasher

B. To fix the product at the sides (when the material of the counter top is not appropriate for drilling)

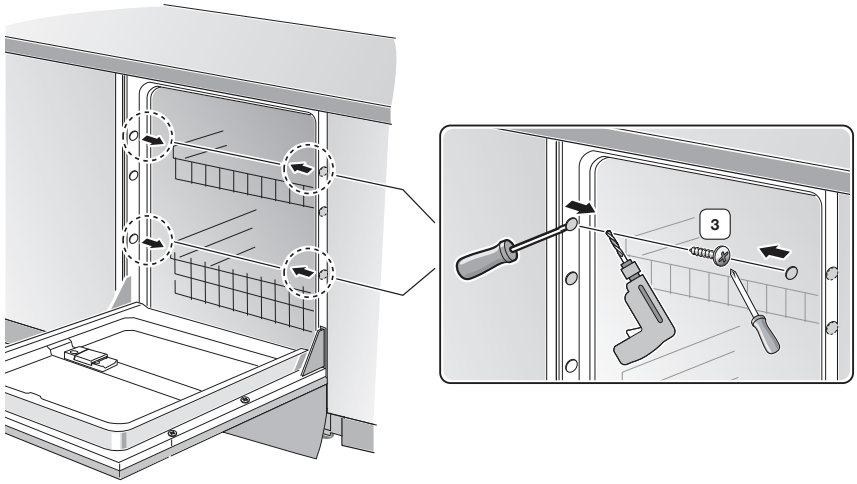

1. Remove upper and lower caps from both side with a tool such as a flat-head screwdriver as shown in figure.

CAUTION Do not remove middle caps from both side.

CAUTION Do not discard the removed plastic caps.

2. Pre-drill the holes with a 2-pi drill bit to a depth of 10~12 mm and fasten the 4 screws [3].

3. Reinstall the plastic caps to their original position.

CAUTION Failing to do so may result in fire or electric shock due to water leakage.

FBI_DW9000H-Series-00167A-00_EN (U.K).indd 20 2015-02-24 12:32:56

STEP 8. CONNECTING THE DRAIN HOSE

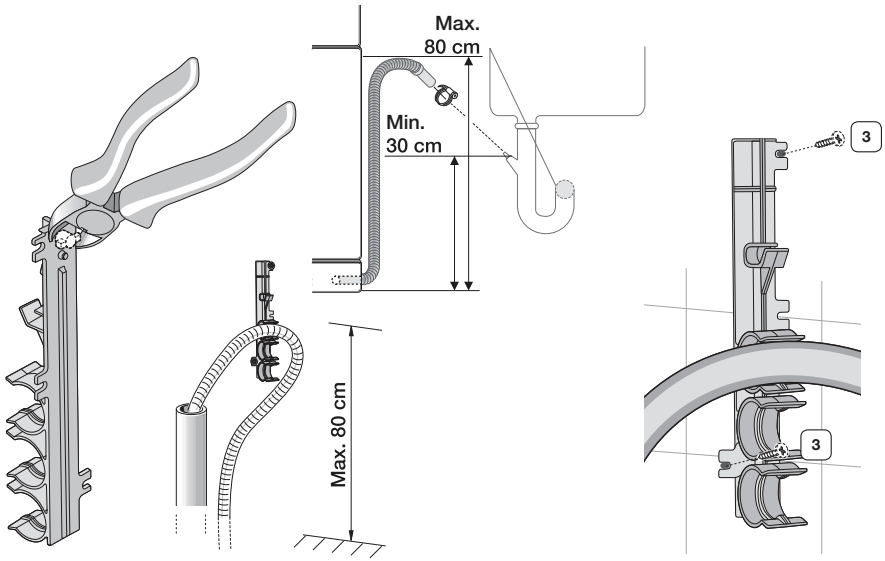

1. Remove the hose holder which is attached to the product and cut off part of the holder as shown in the figure.
2. Fix it to the wall by fastening the 2 screws [3].
3. Insert the drain hose into the fixed hose holder.
   Install the drain hose so that it is placed within a range of 30 cm to 80 cm from the bottom.
4. Connect the drain hose to the drain outlet.

CAUTION
- Take care when you connect the drain hose that it does not move during a draining cycle.
- Confirm that no parts of the drain hose, supply hose or power cord are bent or folded.

FBI_DW9000H-Series-00167A-00_EN (U.K).indd 21 2015-02-24 12:32:56

Installing your dishwasher

STEP 9. COMPLETING THE INSTALLATION

1. Open the door and remove all foam, paper packaging, and unnecessary parts.
2. Turn on the circuit breaker you turned off before you began the installation.
3. Open the water supply valve to supply water to the dishwasher.
4. Turn on the dishwasher, and then select and run a cycle.


Check if the power turns on correctly and if there is any water leakage while the dishwasher is operating.



Make sure to check for water leakage on both ends of the water supply line and drain hose connector.

FBI_DW9000H-Series-00167A-00_EN (U.K).indd 22 2015-02-24 12:32:57

Specifications

SPECIFICATIONS

MODEL		DW60J9970BB
Power		AC 220 ~ 240 V / 50 Hz
Type		Fully Built In
Water pressure		0.05 ~ 0.8 Mpa
Wash capacity (place settings)		14
Rated power		2000 ~ 2300 W
Dimension (mm)		598 (W) x 817 (H) x 555 (D)
Weight	Unpacked	44.0 kg
	Packed	47.0 kg

Specifications are subject to change without notice for quality improvement purposes.
The actual appearance of the dishwasher may differ from the illustrations in this manual.

FBI_DW9000H-Series-00167A-00_EN (U.K).indd 23 2015-02-24 12:32:57



QUESTIONS OR COMMENTS?

COUNTRY	CALL	OR VISIT US ONLINE AT
UK	0330 SAMSUNG (7267864)	www.samsung.com/uk/support
EIRE	0818 717100	www.samsung.com/ie/support

Code No.: DD68-00167A-00_EN