Built-in Oven

User & installation manual

NV73J7740RS



Contents

Using this manual 4

The following symbols are used in this User Manual: 4

Safety instructions 5

Important safety precautions 5
Correct Disposal of This Product (Waste Electrical & Electronic Equipment) 9
Auto energy saving function 9

Installation 10

What's included 10
Power connection 12
Cabinet mount 13

Before you start 16

Initial settings 16
New oven smell 17
Smart safety mechanism 17
Soft Closing Door (Gentle, Safe, and Silent) 17
Accessories 18
Water drawer 20

Operations 21

Control panel 21
Common settings 22
Cooking mode 28
Special function 33
Auto cook 34
Cleaning 35
Timer 39
Sound On/Off 39

NV73J7740RS_EU_DG68-00614E-03_EN.indd 2 2018-04-17 5:27:04

Cooking Smart **40**

Manual cooking 40
Auto cook programmes 49
Test Dishes 55
Collection of frequent Auto cook recipes 57

Maintenance **61**

Cleaning 61
Replacement 68

Troubleshooting **69**

Checkpoints 69
Information codes 72

Appendix **73**

Product data sheet 73

NV73J7740RS_EU_DG68-00614E-03_EN.indd 3 2018-04-17 5:27:04

Using this manual

Thank you for choosing SAMSUNG Built-In Oven.
This User Manual contains important information on safety and instructions intended to assist you in the operation and maintenance of your appliance.
Please take the time to read this User Manual before using your oven and keep this book for future reference.

The following symbols are used in this User Manual:

⚠ WARNING

Hazards or unsafe practices that may result in **severe personal injury, death and/or property damage**.

⚠ CAUTION

Hazards or unsafe practices that may result in **personal injury and/or property damage**.

NOTE

Useful tips, recommendations, or information that helps users manipulate the product.

NV73J7740RS_EU_DG68-00614E-03_EN.indd 4 2018-04-17 5:27:04

Safety instructions

Installation of this oven must be performed only by a licensed electrician. The installer is responsible for connecting the appliance to the mains power supply in observance of the relevant safety recommendations.

Important safety precautions

⚠ WARNING

This appliance is not intended for use by persons (including children) with reduced physical, sensory or mental capabilities, or lack of experience and knowledge, unless they have been given supervision or instruction concerning use of the appliance by a person responsible for their safety.

Children should be supervised to ensure that they do not play with the appliance.

The means for disconnection must be incorporated in the fixed wiring in accordance with the wiring rules.

This Appliance should be allowed to disconnection from the supply after installation. The disconnection may be achieved by having the plug accessible or by incorporating a switch in the fixed wiring in accordance with the wiring rules.

If the supply cord is damaged, it must be replaced by the manufacturer, its service agent or similarly qualified persons in order to avoid a hazard.

The method of fixing stated is not to depend on the use of adhesives since they are not considered to be a reliable fixing means.

NV73J7740RS_EU_DG68-00614E-03_EN.indd 5 2018-04-17 5:27:04

Safety instructions

This appliance can be used by children aged from 8 years and above and persons with reduced physical, sensory or mental capabilities or lack of experience and knowledge if they have been given supervision or instruction concerning use of the appliance in a safe way and understand the hazards involved. Children shall not play with the appliance. Cleaning and user maintenance shall not be made by children without supervision. Keep the appliance and its cord out of reach of children less than 8 years.

During use the appliance becomes hot. Care should be taken to avoid touching heating elements inside the oven.

WARNING: Accessible parts may become hot during use. Young children should be kept away.

Do not use harsh abrasive cleaners or sharp metal scrapers to clean the oven door glass since they can scratch the surface, which may result in shattering of the glass.

If this appliance has cleaning function, excess spillage must be removed before cleaning and all utensils should not be left in the oven during steam cleaning or self cleaning. The cleaning function depends on the model.

If this appliance has cleaning function, during cleaning conditions the surfaces may get hotter than usual and children should be kept away. The cleaning function depends on the model.

Only use the temperature probe recommended for this oven. (Meat probe model only)

A steam cleaner is not to be used.

WARNING: Ensure that the appliance is switched off before replacing the lamp to avoid the possibility of electric shock.

The appliance must not be installed behind a decorative door in order to avoid overheating.

NV73J7740RS_EU_DG68-00614E-03_EN.indd 6 2018-04-17 5:27:04

WARNING: The appliance and its accessible parts become hot during use. Care should be taken to avoid touching heating elements. Children less than 8 years of age shall be kept away unless continuously supervised.

CAUTION: The cooking process has to be supervised. A short term cooking process has to be supervised continuously.

The door or the outer surface may get hot when the appliance is operating.

The temperature of accessible surfaces may be high when the appliance is operating. The surfaces are liable to get hot during use.

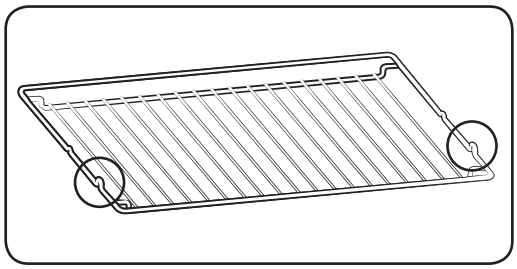

Insert the wire rack into position with the protruding parts (stoppers on both sides) towards the front so that the wire rack supports the rest position for large loads.

⚠ **CAUTION**

If the oven has been damaged in transport, do not connect it.

This appliance must be connected to the mains power supply only by a specially licensed electrician.

In the event of a fault or damage to the appliance, do not attempt to operate it.

Repairs should be performed by a licensed technician only. Improper repair may result in considerable danger to you and others. If your oven needs repair, contact a SAMSUNG Service center or your dealer.

Electrical leads and cables should not be allowed to touch the oven.

The oven should be connected to the mains power supply by means of an approved circuit breaker or fuse. Never use multiple plug adapters or extension leads.

The power supply of the appliance should be turned off when it is being repaired or cleaned.

Take care when connecting electrical appliances to sockets near the oven.

NV73J7740RS_EU_DG68-00614E-03_EN.indd 7 2018-04-17 5:27:05

Safety instructions

If this appliance has a vapour or steam cooking function, do not operate this appliance when the water supply cartridge is damaged. (Vapour or steam function model only)

When the cartridge is cracked or broken, do not use it and contact your nearest service center. (Vapour or steam function model only)

This oven has been designed only for the cooking of household foods.

During use, the oven interior surfaces become hot enough to cause burns. Do not touch heating elements or interior surfaces of the oven until they have had time to cool.

Never store flammable materials in the oven.

The oven surfaces become hot when the appliance is operated at a high temperature for an extended period of time.

When cooking, take care when opening the oven door as hot air and steam can escape rapidly.

When cooking dishes that contain alcohol, the alcohol may evaporate due to the high temperatures and the Vapour can catch fire if it comes into contact with a hot part of the oven.

For your safety, do not use high-pressure water cleaners or steam jet cleaners.

Children should be kept at a safe distance when the oven is in use.

Frozen foods such as pizzas should be cooked on the big grid. If the baking tray is used, it may become deformed due to the great variation in temperatures.

Do not pour water into the bottom of the oven when it is hot. This could cause damage to the enamel surface.

The oven door must be closed during cooking.

Do not line the bottom of the oven with aluminum foil and do not place any baking trays or tins on it. The aluminum foil blocks the heat, which may result in damage to the enamel surfaces and cause poor cooking results.

Fruit juices will leave stains, which can become permanent on the enamel surfaces of the oven.

When cooking very moist cakes, use the deep pan.

Do not rest bakeware on the open oven door.

Keep children away from the door when opening or closing it as they may bump themselves on the door or catch their fingers in the door.

Do not step, lean, sit or place heavy items on the door.

Do not open the door with unnecessarily strong force.

NV73J7740RS_EU_DG68-00614E-03_EN.indd 8 2018-04-17 5:27:05

WARNING: Do not disconnect the appliance from the main power supply even after the cooking process is completed.

WARNING: Do not leave the door open while oven is cooking.

Correct Disposal of This Product (Waste Electrical & Electronic Equipment)

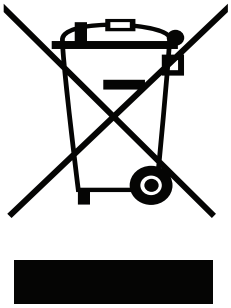

(Applicable in countries with separate collection systems)

This marking on the product, accessories or literature indicates that the product and its electronic accessories (e.g. charger, headset, USB cable) should not be disposed of with other household waste at the end of their working life. To prevent possible harm to the environment or human health from uncontrolled waste disposal, please separate these items from other types of waste and recycle them responsibly to promote the sustainable reuse of material resources.

Household users should contact either the retailer where they purchased this product, or their local government office, for details of where and how they can take these items for environmentally safe recycling.

Business users should contact their supplier and check the terms and conditions of the purchase contract. This product and its electronic accessories should not be mixed with other commercial wastes for disposal.

For information on Samsung's environmental commitments and product specific regulatory obligations e.g. REACH visit: samsung.com/uk/aboutsamsung/samsungelectronics/corporatecitizenship/data_corner.html

Auto energy saving function

- If no user input is made for a certain time while the appliance is operating, the appliance stops operation and goes to Standby state.
- Light : During cooking process, you can switch off Oven lamp by pressing 'Oven light' button. For energy saving, the oven lighting is switched off a few minutes after cooking program has started.

NV73J7740RS_EU_DG68-00614E-03_EN.indd 9 2018-04-17 5:27:05

Installation

⚠ WARNING

This oven must be installed by a qualified technician. The installer is responsible for connecting the oven to the main power, while observing the relevant safety regulations of your area.

What's included

Make sure all parts and accessories are included in the product package. If you have a problem with the oven or accessories, contact a local Samsung customer centre or the retailer.

Oven at a glance

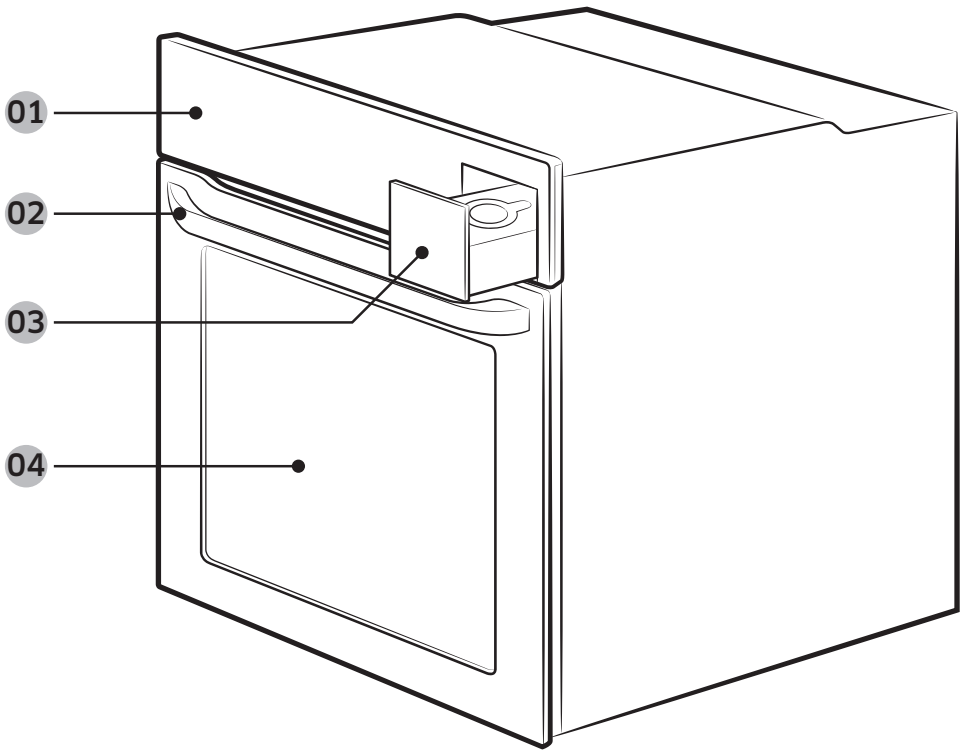

01 Control panel **02** Door handle **03** Water drawer

04 Door

NV73J7740RS_EU_DG68-00614E-03_EN.indd 10 2018-04-17 5:27:05

Accessories

The oven comes with different accessories that help you prepare different types of food.

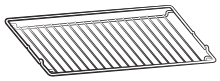

Wire rack

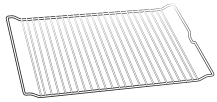

Wire rack insert *



Baking tray *

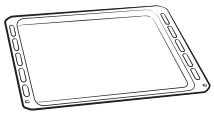

Universal tray *

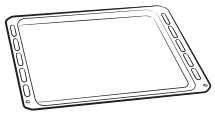

Extra-deep tray *

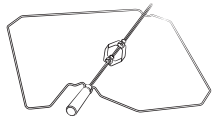

Rotisserie spit *

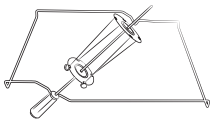

Rotisserie spit and Shashlik *

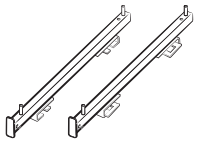

Telescopic rail *

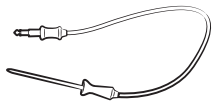

Meat probe *

NOTE

Availability of accessories with an asterisk (*) depends on the oven model.

NV73J7740RS_EU_DG68-00614E-03_EN.indd 11 2018-04-17 5:27:07

Installation

Power connection

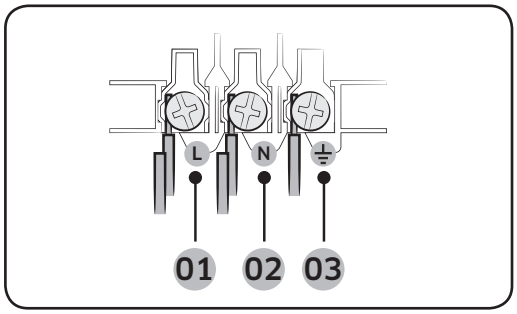

01 BROWN or BLACK
02 BLUE or WHITE
03 YELLOW and GREEN

Plug the oven into an electrical socket. If a plug-type socket is not available due to allowable current limitations, use a multi-pole isolator switch (with at least 3 mm spacing in-between) in order to meet safety regulations. Use a power cord of sufficient length that supports the specification H05 RR-F or H05 VV-F, min. 1.5~2.5 mm².

Rated current(A)	Minimum cross-sectional area
10 < A ≤ 16	1.5 mm²
16 < A ≤ 25	2.5 mm²

Check the output specifications on the label attached to the oven.
Open the rear cover of the oven using a screwdriver, and remove the screws on the cord clamp. Then, connect the power lines to the relevant connection terminals.
The (⏚)-terminal is designed for earthgrounding. First connect the yellow and green lines (earthgrounding), which must be longer than the others. If you use a plug-type socket, the plug must remain accessible after the oven is installed.
Samsung is not responsible for accidents caused by missing or faulty earthgrounding.

⚠ WARNING

Do not step on or twist the wires during installation, and keep them away from heat-emitting parts of the oven.

NV73J7740RS_EU_DG68-00614E-03_EN.indd 12 2018-04-17 5:27:07

Cabinet mount

If installing the oven in a built-in cabinet, the cabinet must have its plastic surfaces and adhesive parts resistant up to 90 °C. Samsung is not responsible for damage to furniture from the oven's heat emission.
The oven must be properly ventilated. For ventilation, leave a gap of about 50 mm between the lower shelf of the cabinet and the supporting wall. If you install the oven under a cooktop, follow the cooktop's installation instructions.

Required Dimensions for Installation

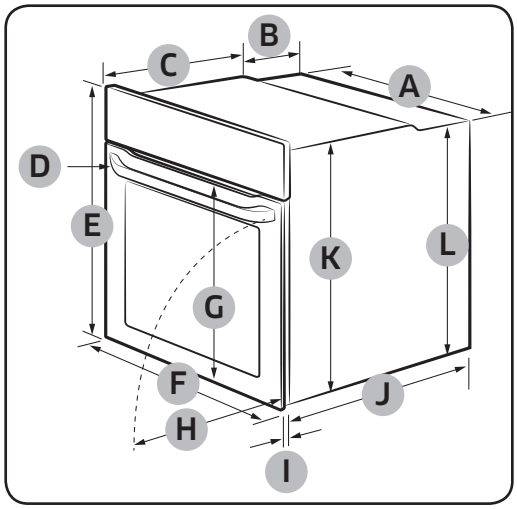

Oven (mm)

A	560	**G**	Max. 506
B	175	**H**	Max. 494
C	370	**I**	21
D	Max. 50	**J**	549
E	595	**K**	572
F	595	**L**	550

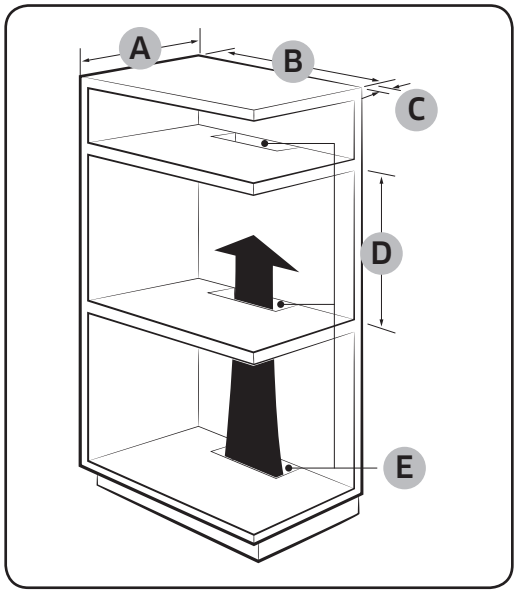

Built-in cabinet (mm)

A	Min. 550
B	Min. 560
C	Min. 50
D	Min. 590 - Max. 600
E	Min. 460 x Min. 50

NOTE

The built-in cabinet must have vents **(E)** to ventilate heat and circulate the air.

NV73J7740RS_EU_DG68-00614E-03_EN.indd 13 2018-04-17 5:27:08

Installation

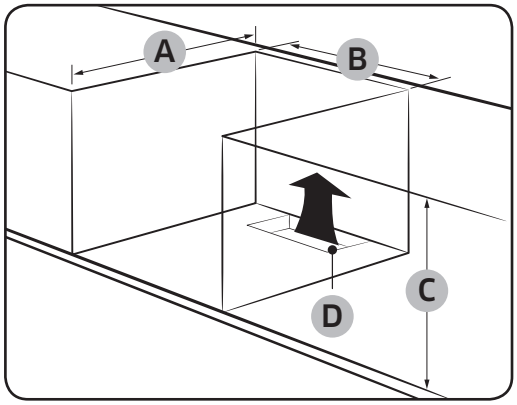

Under-sink cabinet (mm)

A	Min. 550
B	Min. 560
C	Min. 600
D	Min. 460 x Min. 50

NOTE

The built-in cabinet must have vents **(D)** to ventilate heat and circulate the air.

Mounting the oven

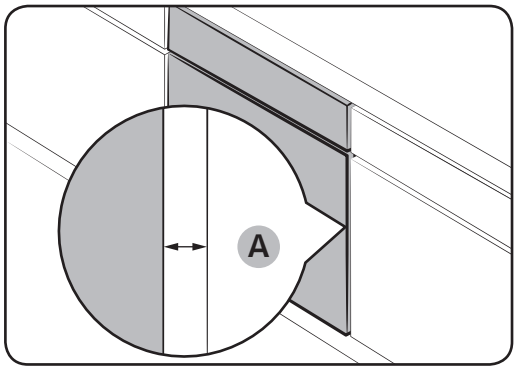

Make sure to leave a gap **(A)** of at least 5 mm between the oven and each side of the cabinet.

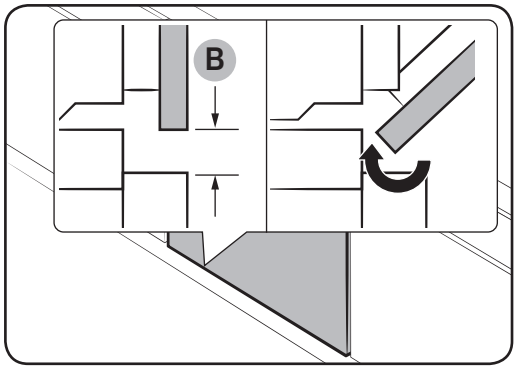

Secure at least 3 mm of gap **(B)** so that the door opens and closes smoothly.

NV73J7740RS_EU_DG68-00614E-03_EN.indd 14 2018-04-17 5:27:08

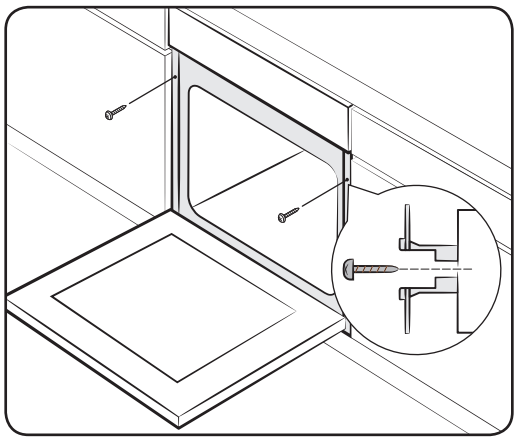

Fit the oven into the cabinet and fix the oven firmly on both sides using 2 screws.

After installation is complete, remove the protective film, tape, and other packing material, and take out the provided accessories from inside the oven. To remove the oven from the cabinet, first disconnect power to the oven and remove 2 screws on both sides of the oven.

⚠ WARNING

The oven requires ventilation for normal operation. Do not block the vents under any circumstance.

NOTE

The actual appearance of the oven may differ with the model.

NV73J7740RS_EU_DG68-00614E-03_EN.indd 15 2018-04-17 5:27:09

Before you start

Initial settings

When you power on the oven for the first time, the default time of “12:00” appears on the display where the hour element (“12”) blinks. Follow the steps below to set the current time.

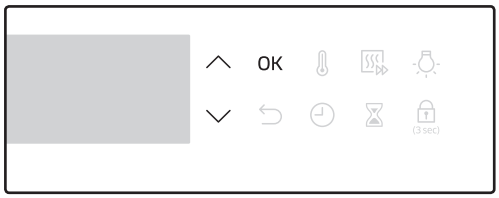

1. Use the arrow buttons to set the hour, and then press **OK**. The minute element blinks.

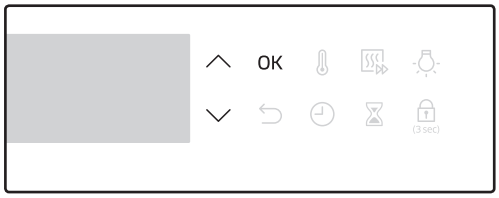

2. Use the arrow buttons to set the minute, and then press **OK**.

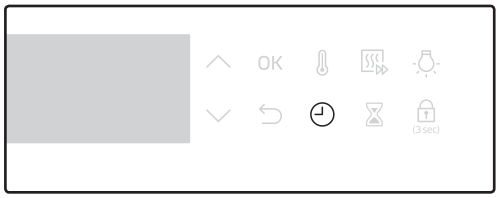

To change the current time after this initial setting, hold down the ◴ for 3 seconds and follow the above steps.

NV73J7740RS_EU_DG68-00614E-03_EN.indd 16 2018-04-17 5:27:09

New oven smell

Before using the oven for the first time, clean inside the oven to remove the new oven smell.

1. Remove all accessories from inside the oven.
2. Run the oven with Convection 200 °C or Conventional 200 °C for an hour. This will burn any remaining production substances in the oven.
3. When complete, turn off the oven.

Smart safety mechanism

If you open the door while the oven is operating, the oven light turns on and both the fan and the heating elements stop operation. This is to prevent physical injuries such as burns as well as to prevent unnecessary energy loss. When this happens, simply close the door and the oven continues to operate normally because this is not a system failure.

Soft Closing Door (Gentle, Safe, and Silent)

The Samsung Built-in Oven features a soft closing door that gently, safely, and silently closes. When closing the door, the specially designed hinges catch the door a few centimetres before the final position. This is the perfect touch for added comfort, allowing the door to be closed silently and gently. (Availability of this feature depends on the oven model.)

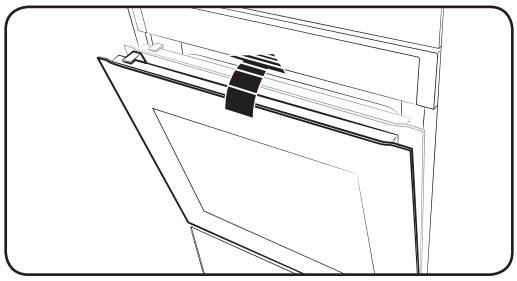

The door starts to be closed softly at about 15 degrees and completely closed within approx. 5 seconds.

NV73J7740RS_EU_DG68-00614E-03_EN.indd 17 2018-04-17 5:27:10

Before you start

Accessories

For first time use, clean the accessories thoroughly with warm water, detergent and a soft clean cloth.

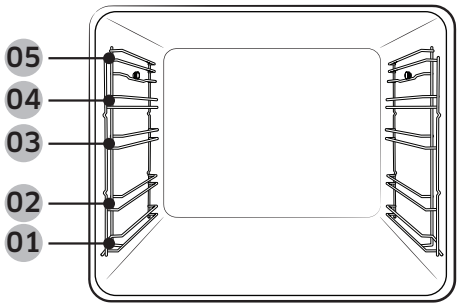

01 Level 1

02 Level 2

03 Level 3

04 Level 4

05 Level 5

- Insert the accessory to the correct position inside of the oven.
- Allow at least a 1 cm space from the accessory and the bottom of the oven, and from any other accessory.
- Take caution in removing cookware and/or accessories out of the oven. Hot meals or accessories can cause burns.
- The accessories may be deformed while they are gaining heat. Once they have cooled down, they will recover their original appearance and performance.

Basic use

For better cooking experience, familiarise yourself with how to use each accessory.

Wire rack	The wire rack is designed for grilling and roasting. Insert the wire rack into position with the protruding parts (stoppers on both sides) towards the front
Wire rack insert *	The wire rack insert is used with the tray, and prevents liquid from dropping onto the bottom of the oven.
Baking tray *	The baking tray (depth: 20 mm) is used to bake cakes, cookies, and other pastries. Put the slanted side to the front.
Universal tray *	The universal tray (depth : 30 mm) is used for cooking and roasting. Use the wire-tray insert to prevent liquid from dropping onto the bottom of the oven. Put the slanted side to the front.
Extra-deep tray *	The extra-deep tray (depth: 50 mm) is used for roasting with or without the wire-tray insert. Put the slanted side to the front.
Rotisserie spit *	The rotisserie spit is used for grilling food such as chicken. Use the rotisserie spit only in Single mode at level 4 where the spit adapter is available. Unscrew the spit handle to remove while grilling.

NV73J7740RS_EU_DG68-00614E-03_EN.indd 18 2018-04-17 5:27:10

Rotisserie spit and Shashlik *	Put the tray at rack position 1 to collect cooking juices, or on the bottom of the oven for a large serving of meat. It is recommended to use the spit accessories for meat under 1.5 kg. **1.** Insert the spit into the meat. To help insert the spit, screw the spit handle toward the blunt end. **2.** Put parboiled potatoes and vegetables around the meat. **3.** Put the cradle at the middle tray position with the “V” shape to the front. Rest the spit onto the cradle with the pointed end backward and gently push until the tip of the spit enters the turning mechanism at the back of the oven. The blunt end of the spit must rest on the “V” shape. (The spit has two lugs which should be nearest to the oven door so to stop the spit going forward, the lugs also act as a grip for the handle.) **4.** Unscrew the handle before cooking. **5.** After cooking, screw the handle back to help remove the spit from the cradle.
Telescopic rails *	Use the telescopic rail plate to insert the tray as follows: **1.** Stretch the rail plate out from the oven. **2.** Put the tray on the rail plate and slide the rail plate into the oven. **3.** Close the oven door.
Meat probe *	The meat probe measures the internal temperature of the meat to cook. Use only the meat probe that comes with your oven.

NOTE

Availability of accessories with an asterisk (*) depends on the oven model.

NV73J7740RS_EU_DG68-00614E-03_EN.indd 19 2018-04-17 5:27:10

Before you start

Water drawer

The water drawer is used for Vapour functions. Fill it with water in advance of Vapour cooking.

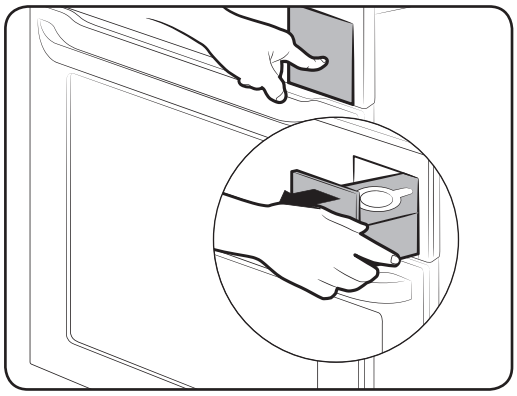

1. Locate the water drawer in the top-right corner. Push in the drawer to open and remove.

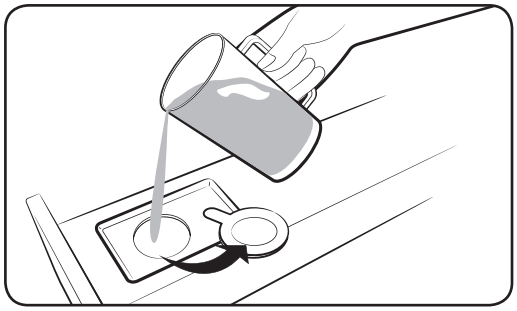

2. Open the drawer cap, and fill the drawer with 500 ml of drinkable water.
3. Close the cap, and reinsert the drawer.

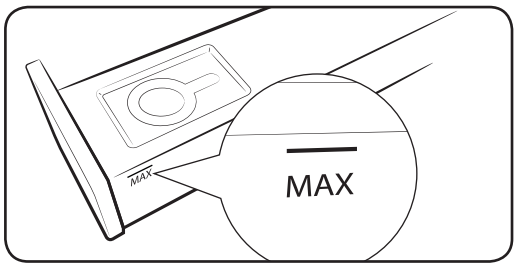

NOTE

Do not exceed the max line.

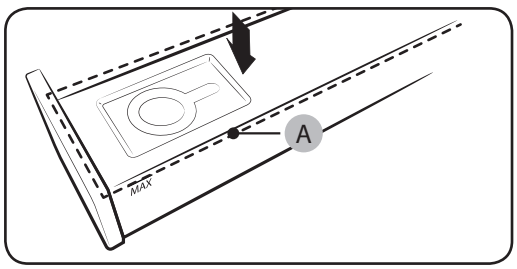

NOTE

Make sure the upper case **(A)** of the water drawer is closed before using the oven.

NV73J7740RS_EU_DG68-00614E-03_EN.indd 20 2018-04-17 5:27:11

Operations

Control panel

The front panel comes in a wide range of materials and colours. For improved quality, the actual appearance of the oven is subject to change without notice.

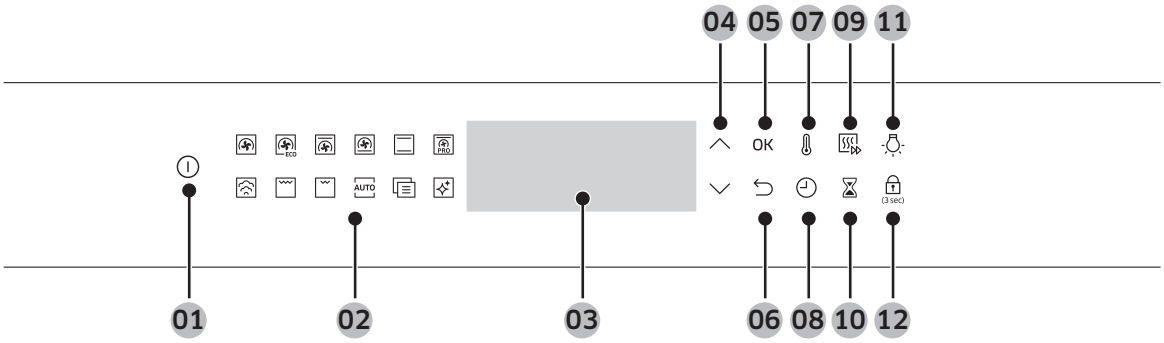

01 Power	Press to turn the oven on. To turn it off, hold down for 1 seconds.
02 Feature panel	Press to select a desired cooking mode or function.
03 Display	Shows necessary information of selected modes or settings.
04 Up / Down	Use to adjust the setting value for your selection.
05 OK	Press to confirm your settings.
06 Back	Cancel current settings, and return to the main screen.
07 Temperature	Use to set the temperature.
08 Cooking time	Press to set the cooking time.
09 Fast preheat	Fast Preheat heats the oven fast to a set temperature. • Press to toggle on or off the Fast Preheat option. • Disabled for temperatures set at less than 100 °C. • Fast preheat is available only with applicable cooking modes and temperature ranges.
10 Timer	Timer helps you check the time or operating duration while cooking.
11 Oven light	Press to turn the internal light on or off. The oven light turns on automatically when the door is open or when the oven operation starts. And it turns off automatically after a certain period of inactivity in order to save power.
12 Child lock	To prevent accidents, Child Lock disables all controls except for the Power button. Hold down for 3 seconds to activate, or hold down for 3 seconds again to deactivate the lock on the control panel.

NOTE

Tapping on the display while wearing plastic or oven gloves may not operate properly.

NV73J7740RS_EU_DG68-00614E-03_EN.indd 21 2018-04-17 5:27:11

Operations

Common settings

It is common to change the default temperature and/or cooking time across all cooking modes. Follow the steps below to adjust the temperature and/or cooking time for the selected cooking mode.

Temperature



1. On the feature panel, press to choose a cooking mode. The default temperature of each selection appears.

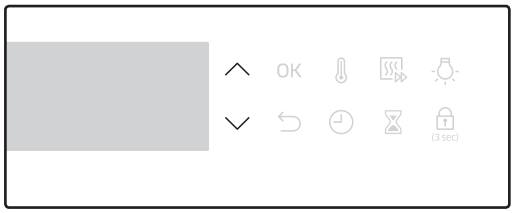

2. Use the Use the ∧ / ∨ buttons to set the temperature.

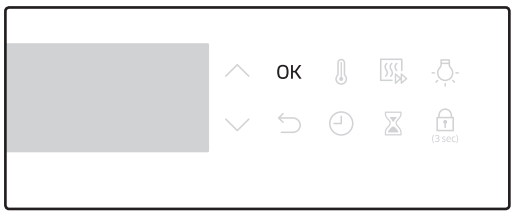

3. Press **OK** to confirm your changes.

NOTE

- If you do not make any further settings within a few seconds, the oven starts cooking automatically with the default settings.
- To change the set temperature, press button and follow the above steps.
- The exact temperature inside the oven can be measured with authorized thermometer and method defined by an authorized institution. Using other thermometers may cause a measuring error.

NV73J7740RS_EU_DG68-00614E-03_EN.indd 22 2018-04-17 5:27:12

Cooking time

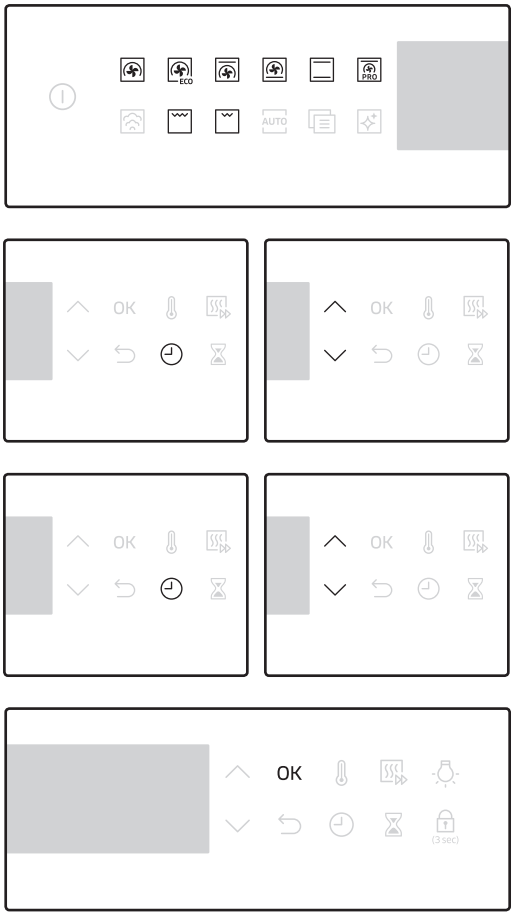

1. On the feature panel, press to choose a cooking mode.

2. Press ⏲, and use the ∧ / ∨ buttons to set a desired time.

3. Optionally, you can delay the end time of your cooking to a desired point. Press ⏲, and use the ∧ / ∨ to set an end point. See **Delay End** for more information.

4. Press **OK** to confirm your changes.

NOTE

- You can cook without setting the cooking time if you want to. In this case, the oven starts cooking at set temperatures without time information, and you must stop the oven manually when cooking is complete.
- To change the set cooking time, press ⏲ button and follow the above steps.

NV73J7740RS_EU_DG68-00614E-03_EN.indd 23 2018-04-17 5:27:12

Operations

End time



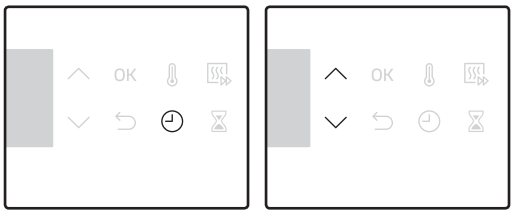

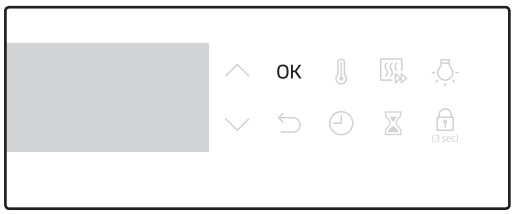

1. On the feature panel, press to choose a cooking mode.
2. Press ◴ twice, and use the ∧ / ∨ buttons to set a desired end time.
3. Press **OK** to confirm your changes.

NOTE

To change the end time, press ◴ twice, and follow the above steps.

NV73J7740RS_EU_DG68-00614E-03_EN.indd 24 2018-04-17 5:27:12

Delay End

Delay End is designed to make cooking more convenient.

Case 1

Suppose you select a one-hour recipe at 2:00 PM and you want the oven to finish cooking at 6:00 PM. To set the end time, change the Ready At time to 6:00 PM. The oven will start cooking at 5:00 PM and end at 6:00 PM as you set.

Current time: 2 pm Set cooking time: 1 hour Set Delay End time: 6 pm

The oven will start cooking at 5:00 PM and end at 6:00 PM automatically.

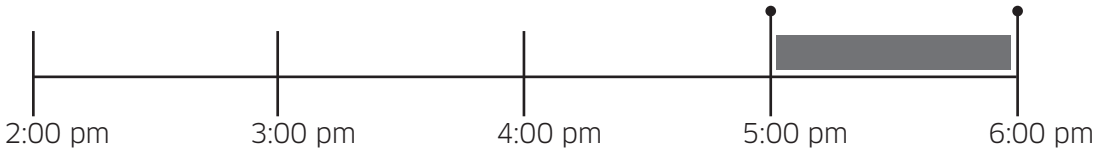

Case 2

Current time: 2 pm Set cooking time: 2 hour Set Delay End time: 5 pm

The oven will start cooking at 3:00 PM and end at 5:00 PM automatically.

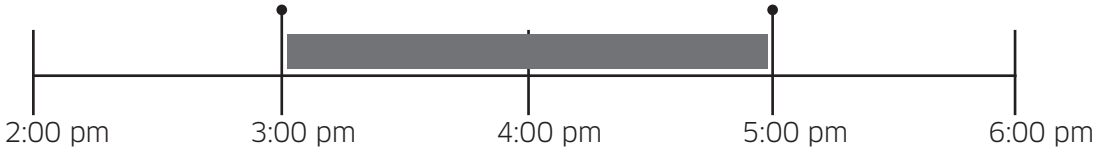

⚠ CAUTION

Do not keep cooked food in the oven too long. The food may spoil.

NV73J7740RS_EU_DG68-00614E-03_EN.indd 25 2018-04-17 5:27:12

Operations

To clear the cooking time

You can clear the cooking time. This is useful if you want to stop the oven manually at any time during the process.

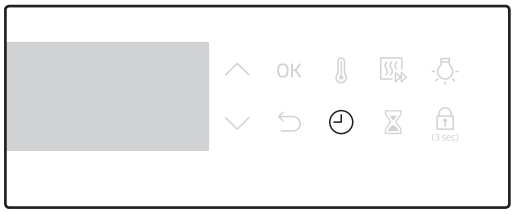

1. While the oven is cooking, press ◴ to display the remaining cooking time.

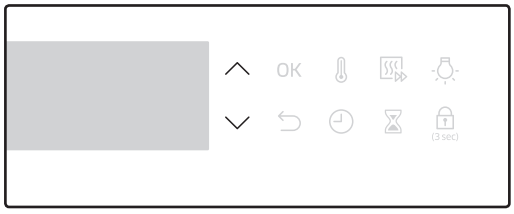

2. Use the ∧ / ∨ buttons to set the cooking time to “00:00”. Alternatively, simply press ⮌.

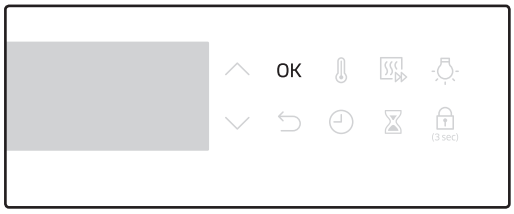

3. Press **OK**. The oven continues to cook at set temperatures without time information.

NOTE

If you have cancelled the cooking time, you must stop the oven manually when cooking is complete.

NV73J7740RS_EU_DG68-00614E-03_EN.indd 26 2018-04-17 5:27:13

To clear the end time

You can clear the end time. This is useful if you want to stop the oven manually at any time during the process.

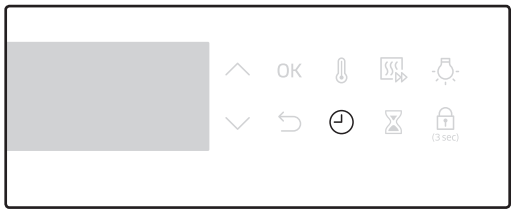

1. While the oven is cooking, press ◴ twice to display the set end time.

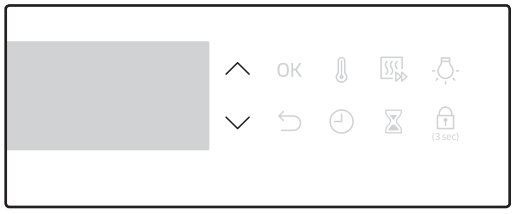

2. Use the ∧ / ∨ buttons to set the end time to the current time. Alternatively, simply press ⮌.

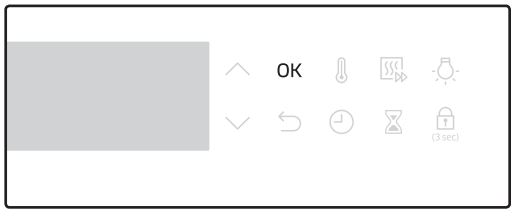

3. Press **OK**. The oven continues to cook at set temperatures without time information.

NOTE

If you have cancelled the end time, you must stop the oven manually when cooking is complete.

To stop cooking

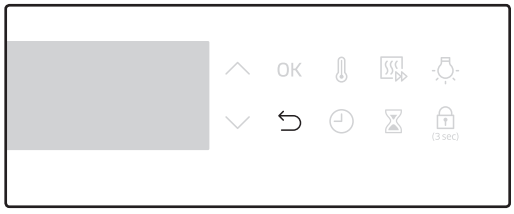

1. While cooking is in process, press ⮌.

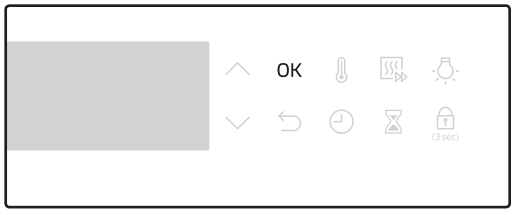

2. Press **OK** to cancel cooking.

NV73J7740RS_EU_DG68-00614E-03_EN.indd 27 2018-04-17 5:27:13

Operations

Cooking mode

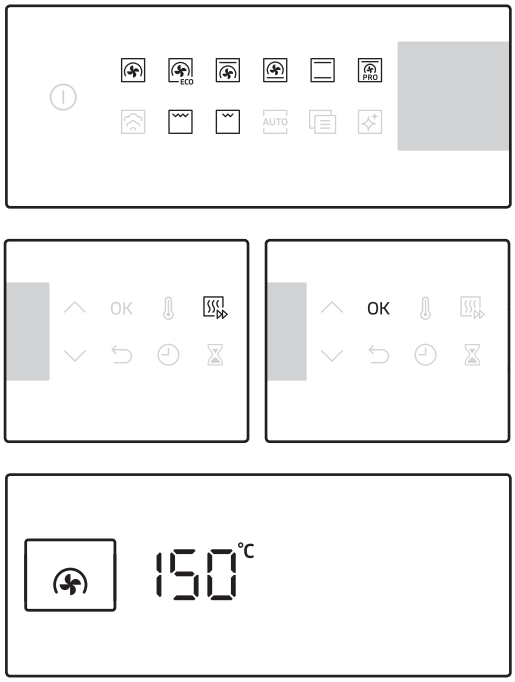

1. On the feature panel, press to choose a cooking mode.
2. Set the cooking time and/or temperature if necessary. For more information, see Common Settings.
3. Optionally, you can fast preheat the oven. To do this, press , and set the target temperature. The corresponding indicator appears on the display.
4. When done, press **OK**.

The oven starts preheating until the internal temperature reaches the target temperature. When preheating is complete, the indicator disappears with a beep.
Preheating is recommended for all cooking modes unless otherwise specified in the cooking guide.

NOTE

You can change the cooking time and/or temperature during cooking.

NV73J7740RS_EU_DG68-00614E-03_EN.indd 28 2018-04-17 5:27:14

Vapour cooking

The oven is featured by the Vapour function. The Vapour cooking function allows you to use of a wide range of recipes.



1. Fill the water drawer with 500 ml of water.
2. On the feature panel, press .

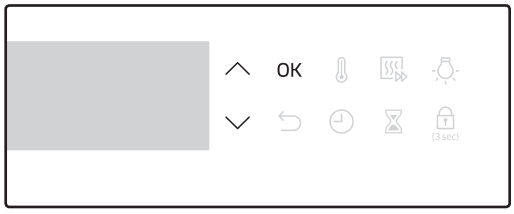

3. Use the ∧ / ∨ buttons to select a function. Then, press **OK**.

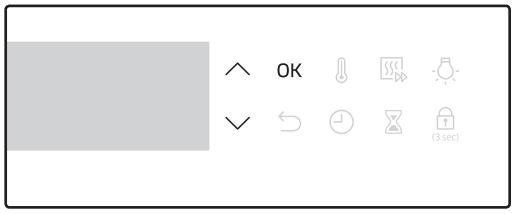

4. Use the ∧ / ∨ buttons to select a Vapour level, and then press **OK**.
5. Set the cooking time and/or temperature if necessary. For more information, see Common Settings.

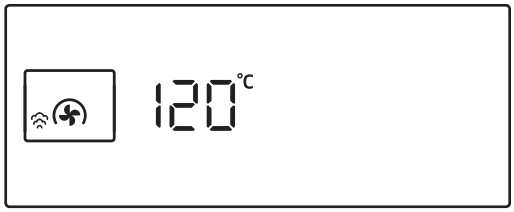

The oven starts preheating until the internal temperature reaches the target temperature. Preheating is recommended for all cooking modes unless otherwise specified in the cooking guide.

NOTE

- When Vapour is enabled and the water drawer runs out of water, the indicator blinks. The oven continues to operate but the steam generator stops operation until you refill the water drawer with water.
- Make sure to drain the remaining water after using Vapour Cooking. Once the oven starts draining, please wait until the draining cycle is complete.
- When a Vapour function is complete, you must empty the water drawer because the remaining water can affect other cooking modes.

NV73J7740RS_EU_DG68-00614E-03_EN.indd 29 2018-04-17 5:27:15

Operations

Cooking with the meat probe

The meat probe measures the internal temperature of meat while it's cooking. When the temperature reaches the target temperature, the oven stops and finishes cooking.

- Use only the meat probe that comes with your oven.
- You cannot set the cooking time if the meat probe is plugged in.

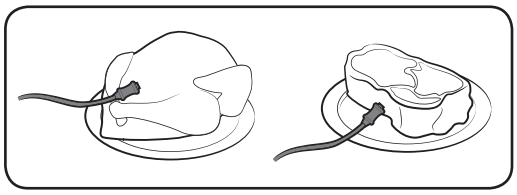

1. Insert the tip of the meat probe into the centre of the meat to cook. Make sure the rubber handle is not inserted.

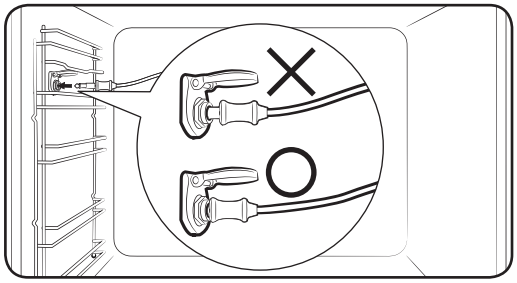

2. Plug the probe connector into the socket on the leftsided wall. Make sure you see the Meat Probe indicator (🍗) with the current temperature of the meat's core on the display.

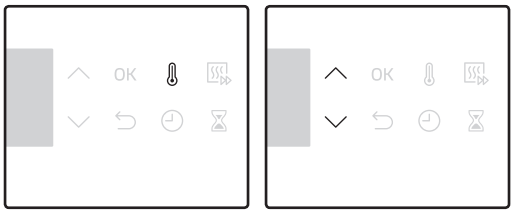

3. Select the cooking mode and the temperature.

4. Press the 🌡 button again, and then use the ∧ / ∨ buttons to set the probe temperature (30-99 °C).
   - Cooking will stop when the meat temperature reaches the set temperature.

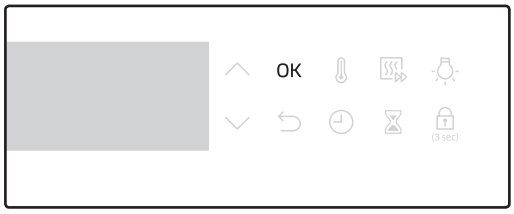

5. Press **OK** to start cooking.
The oven completes cooking with a melody when the internal temperature of the meat reaches the set temperature.

⚠ WARNING

- To prevent damage, do not use the meat probe with the spit accessory.
- When cooking is complete, the meat probe becomes very hot. To prevent burns, use oven gloves to take out the food.

NOTE

- Not all modes support using the meat probe. If you use the meat probe with inapplicable modes, the current mode indicator blinks. When this happens, remove the meat probe instantly.

NV73J7740RS_EU_DG68-00614E-03_EN.indd 30 2018-04-17 5:27:16

Cooking modes

Mode		Temperature range (℃)	Suggested temperature (℃)	Fast preheat	Meat probe
	Convection	30-275	170	O	O
		The rear heating element generates heat, which is evenly distributed by the convection fan. Use this mode for baking and roasting on different levels at the same time.			
	Conventional	30-275	200	O	O
		The heat is generated from the top and bottom heating elements. This function should be used for standard baking and roasting for most types of dishes.			
	Top heat + convection	40-275	190	O	O
		The top heating element generates heat, which is evenly distributed by the convection fan. Use this mode for roasting that requires a crispy top (for example, meat or lasagne).			
	Bottom heat + convection	40-275	190	O	O
		The bottom heating element generates heat, which is evenly distributed by the convection fan. Use this mode for pizza, bread, or cake.			
	Large grill	100-300	240	-	X
		The large-area grill emits heat. Use this mode for browning the tops of food (for example, meat, lasagne, or gratin).			
	Eco grill	100-300	240	-	X
		The small-area grill emits heat. Use this mode for food that requires less heat, such as fish and filled baguettes.			
	Pro-Roasting	80-200	160	-	O
		Pro-Roasting runs an automatic pre-heating cycle until the oven temperature reaches 220 °C. Then, the top heating element and the convection fan start operating to sear food such as meat. After searing, the meat will be cooked at low temperatures. Use this mode for beef, poultry, or fish.			

NV73J7740RS_EU_DG68-00614E-03_EN.indd 31 2018-04-17 5:27:17

Operations

Mode		Temperature range (°C)	Suggested temperature (°C)	Fast preheat	Meat probe
	Eco convection	30-275	170	-	O
		Eco Convection uses the optimized heating system to save energy while cooking. The cooking times slightly increases, but the cooking results remain the same. Note that this mode does not require preheating. **NOTE** ECO Convection mode of heating used to determine the energy efficiency class is in accordance with EN60350-1			

Vapour function

Mode		Temperature range (°C)	Suggested temperature (°C)	Fast preheat	Meat probe
V 1	Vapour Convection	120-275	170	O	O
		The heat generated by the convection heater and fans is continuously supported by hot vapour air. The intensity of the vapour air can be adjusted to low, medium, or high. This mode is suitable for baking puff pastries, yeast cake, bread, and pizza and roasting meat and fish.			
V 2	Vapour Top heat + Convection	120-275	170	O	O
		The heat generated by the top heater and the convection heater is shared evenly in the oven by the fan, and the hot vapour supports the heating elements. This mode is suitable for roasting crusty dishes like meat, poultry, or fish.			
V 3	Vapour Bottom heat + Convection	120-275	170	O	O
		The heat generated by the bottom heating element and the convection heater is shared evenly in the oven by the fan, and the hot vapour supports the heating elements. This mode is suitable for crispy baking foods like pizza or apple pie.			

NV73J7740RS_EU_DG68-00614E-03_EN.indd 32 2018-04-17 5:27:17

Special function

Add special or additional functions to improve your cooking experience.



1. Press on the feature panel.

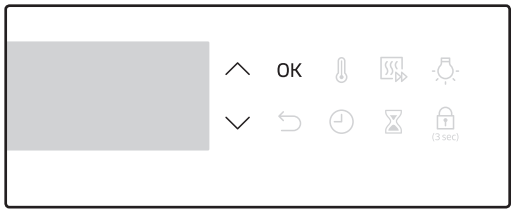

2. Use the ∧ / ∨ buttons to select a function, and then press **OK**.
3. Set the cooking time and/or temperature if necessary. For more information, see Common Settings.

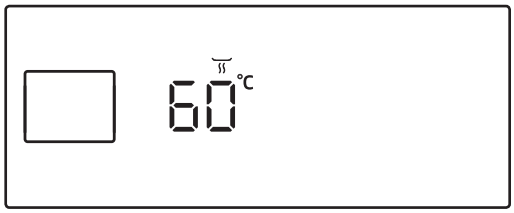

4. The oven starts the selected function with the default or your settings.

Overview

Mode		Temperature range (°C)	Suggested temperature (°C)	Instructions
F 1	Keep warm	40-100	80	Use this only for keeping foods warm that have just been cooked.
F 2	Plate warm	30-80	60	Use this for warming dishes or ovenware.

NV73J7740RS_EU_DG68-00614E-03_EN.indd 33 2018-04-17 5:27:18

Operations

Auto cook

For inexperienced cooks, the oven offers a total of 40 auto cooking recipes. Take advantage of this feature to save you time or shorten your learning curve. The cooking time and temperature will be adjusted according to the selected programme and serving size.



1. On the feature panel, press AUTO.

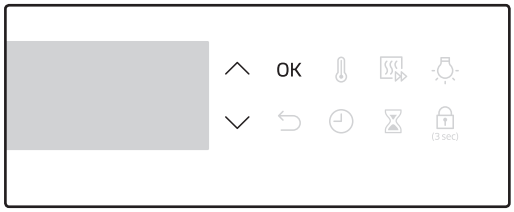

2. Use the ∧ / ∨ buttons to select a programme, and then press **OK**. The available weight range (serving size) is presented for you.

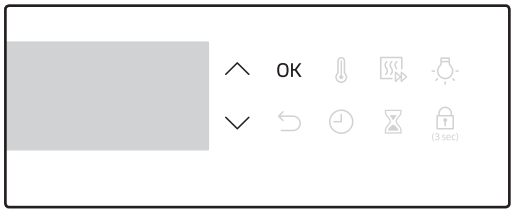

3. Use the ∧ / ∨ buttons to set the serving size, and then press **OK** to start cooking.

NOTE

- Some of the items in the Auto cook programmes include preheating. For those items the preheating progress is displayed. Please put the food in the oven after preheating beep. Then, press **Cooking time** to start Auto Cook.
- For more information, see the Auto cook programmes section in this manual.

NV73J7740RS_EU_DG68-00614E-03_EN.indd 34 2018-04-17 5:27:18

Cleaning

Two cleaning modes are available for you. This function saves you time by removing the need for regular manual cleaning.

Function		Instructions
C 1	Steam cleaning	This is useful for cleaning light soiling with steaming.
C 2	Descale	Clean inside the steam generator to prevent affecting the food quality and taste.

Steam cleaning

This is useful for cleaning light soiling with steaming.

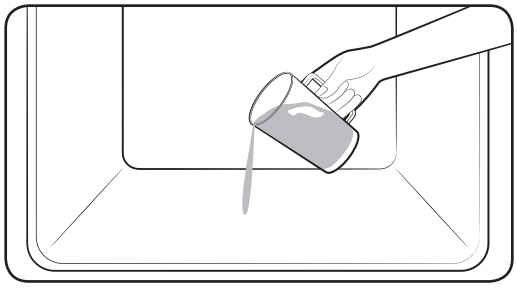

1. Pour 400 ml (3/4 pint) of water onto the bottom of the oven and close the oven door.



2. On the feature panel, press ✧.

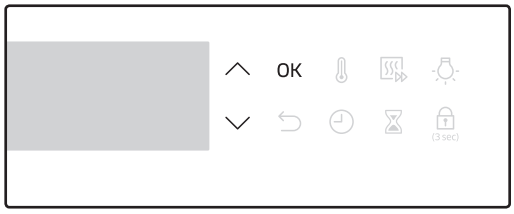

3. Use the ∧ / ∨ buttons to select Steam Clean (**C1**). Then, press **OK**.

NV73J7740RS_EU_DG68-00614E-03_EN.indd 35 2018-04-17 5:27:19

Operations

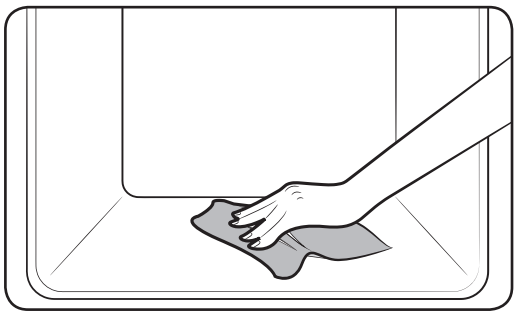

4. Use a dry cloth to clean inside the oven.

⚠ WARNING

- Do not open the door before the cycle is complete. The water inside the oven is very hot, and it can cause a burn.

NOTE

- If the oven is heavily soiled with grease, for example, after roasting or grilling, it is recommended to remove stubborn soils manually using a cleaning agent before activating Steam cleaning.
- Leave the oven door ajar when the cycle is complete. This is to allow the interior enamel surface to dry thoroughly.
- While the oven is hot inside, cleaning is not activated. Wait until the oven cools down, and try again.
- Do not pour water onto the bottom by force. Do it gently. Otherwise, the water overflows to the front.

Descale

Clean inside the steam generator to prevent affecting the food quality and taste.
Use only descaling agents that are specific to steam ovens or coffee machines.



If you use Vapour functions for more than a total of 12 hours, the Descale indicator turns on. You can still enable vapour functions for the next two hours without going through the descaling. However, no vapour function will be enabled after the two hours unless activating and completing the descaling cycle.

NV73J7740RS_EU_DG68-00614E-03_EN.indd 36 2018-04-17 5:27:19



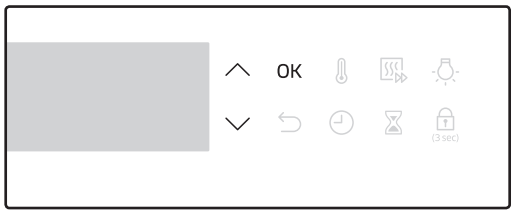

1. Empty and clean the water drawer, and then fill it with 50 ml of descaling agent, and 400 ml of water.
2. On the feature panel, press ✧.

3. Use the ∧ / ∨ buttons to select Descale (C2), and then press **OK**.
4. The oven starts descaling. The descaling cycle breaks down to 5 steps, each of which you will be notified of on the screen. Below are step 1 through 3.

Step 1	Apply descaling agents	Approx. 2 min.
Step 2	Descaling	Approx. 3 hrs.
Step 3	Draining	Approx. 4 min.

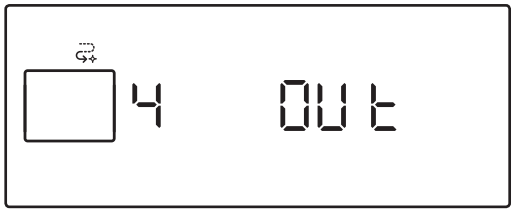

5. When the oven goes to step 4, you will see "**Out**" on the screen. Remove and empty the water drawer, and refill with 500 ml of drinkable water. Then, reinsert the drawer. The "In" message that appears will disappear.

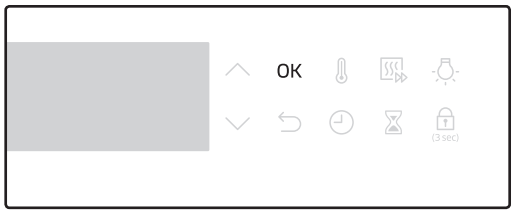

6. Press **OK**. The oven continues to rinse and drain for 5 minutes, and then moves to step 5.

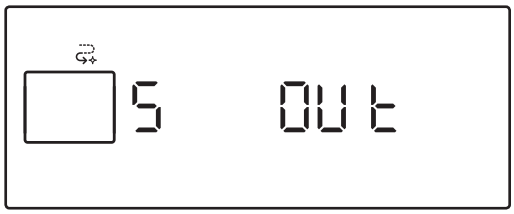

7. When complete, you will see "**Out**" on the screen. Remove and clean the water drawer, and then reinsert.

NV73J7740RS_EU_DG68-00614E-03_EN.indd 37 2018-04-17 5:27:19

Operations

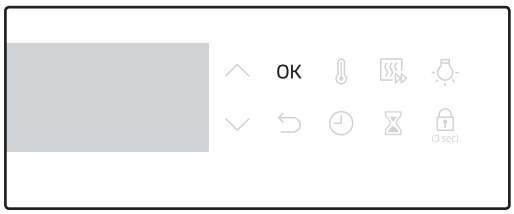

8. Press **OK**. Descaling is complete with a beep.

⚠ WARNING

Use only descaling agents that are specific to steam ovens or coffee machines.

⚠ CAUTION

- The indicator blinks and the oven stops operation if the water drawer runs out of water during the decaling cycle. When this happens, refill the drawer just to the extent of a total of 400 ml of drinkable water. Do not overfill the drawer. Otherwise, you will encounter a water leak from the water drawer.
- Do not cancel descaling in the process. Otherwise, you must restart the descaling cycle and complete within the next three hours in order to enable vapour functions.
- To avoid accidents, keep children away from the oven.
- For the mixture ratio of water and the descaling agent, follow the agent manufacturer's instruction as it precedes.

NOTE

Although the oven automatically starts descaling in 5 seconds without your confirmation, it is recommended to confirm your selection. This is to prevent unintended cleaning from starting by mistake.

Draining

If you want to drain again for cleaning purposes, use Draining as follows:

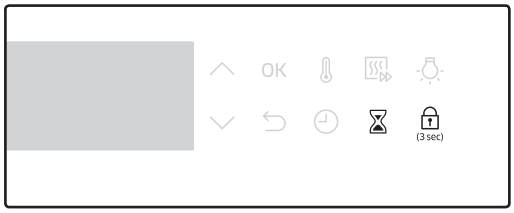

1. Press and hold the and (3 sec) buttons simultaneously for 3 seconds.
2. The oven drains water from the steam generator to the water drawer.
3. When draining is complete, use oven gloves to remove and empty the water drawer.

NOTE

Once the oven starts draining, please wait until the draining cycle is complete.

NV73J7740RS_EU_DG68-00614E-03_EN.indd 38 2018-04-17 5:27:20

Timer

Timer helps you check the time or operating duration while cooking.

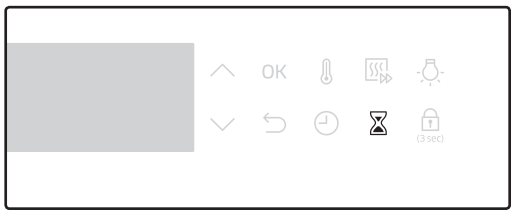

1. On the feature pane, press ⧖.

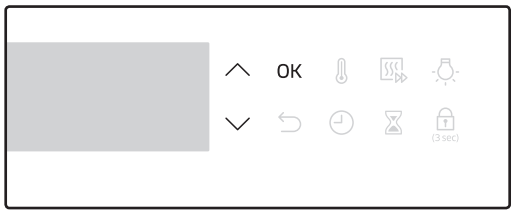

2. Use the ∧ / ∨ buttons to set the desired duration, and then press **OK**.

Sound On/Off

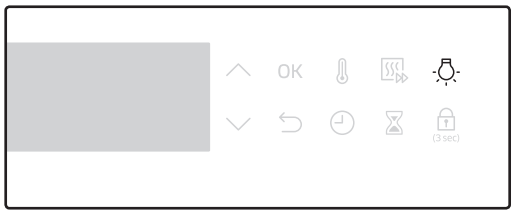

- To mute the sound, tap and hold down Oven Light for 3 seconds.
- To unmute the sound, tap and hold down again for 3 seconds.

NV73J7740RS_EU_DG68-00614E-03_EN.indd 39 2018-04-17 5:27:20

Cooking Smart

Manual cooking

⚠ WARNING on acrylamide

Acrylamide produced while baking starch-contained food such as potato chips, French fries, and bread may cause health problems. It is recommended to cook these foods at low temperatures and avoid overcooking, heavy crisping, or burning.

NOTE

- Pre-heating is recommended for all cooking modes unless otherwise specified in the cooking guide.
- When using Eco Grill, put food in the centre of the accessory tray.

Accessory tips

Your oven comes with a different number or kind of accessories. You may find that some accessories are missing from the table below. However, even if you are not provided with the exact accessories specified in this cooking guide, you can follow along with what you already have, and achieve the same results.

- The Baking tray and the Universal tray are interchangeable.
- When cooking oily foods, it is recommended to put a tray under the Wire rack to collect oil residue. If you are provided with the Wire rack insert, you can use it together with the tray.
- If you are provided with the Universal tray or Extra deep tray, or both, it is better to use whichever is deeper for cooking oily foods.

Baking

We recommend to preheat the oven for best results.

Food	Accessory	Level	Type of heating	Temp. (°C)	Time (min.)
Sponge cake	Wire rack, Ø 25-26 cm tin	2		160-170	35-40
Marble cake	Wire rack, Gugelhopf tin	3		175-185	50-60
Tart	Wire rack, Ø 20 cm tart tin	3		190-200	50-60
Yeast cake on tray with fruits and crumbles	Universal tray	2		160-180	40-50

NV73J7740RS_EU_DG68-00614E-03_EN.indd 40 2018-04-17 5:27:20

Food	Accessory	Level	Type of heating	Temp. (°C)	Time (min.)
Fruit crumble	Wire rack, 22-24 cm oven dish	3		170-180	25-30
Scones	Universal tray	3		180-190	30-35
Lasagne	Wire rack, 22-24 cm oven dish	3		190-200	25-30
Meringues	Universal tray	3		80-100	100-150
Soufflé	Wire rack, soufflé cups	3		170-180	20-25
Apple yeast tray cake	Universal tray	3		150-170	60-70
Homemade pizza, 1-1.2 kg	Universal tray	2		190-210	10-15
Frozen puff pastry, filled	Universal tray	2		180-200	20-25
Quiche	Wire rack, 22-24 cm oven dish	2		180-190	25-35
Apple pie	Wire rack, Ø 20 cm tin	2		160-170	65-75
Chilled pizza	Universal tray	3		180-200	5-10

Roasting

Food	Accessory	Level	Type of heating	Temp. (°C)	Time (min.)
Meat(Beef/Pork/Lamb)					
Sirloin of beef, 1 kg	Wire rack insert + universal tray	3		160-180	50-70
Boned loin of veal, 1.5 kg	Wire rack insert + universal tray	3		160-180	90-120

NV73J7740RS_EU_DG68-00614E-03_EN.indd 41 2018-04-17 5:27:20

Cooking Smart

Food	Accessory	Level	Type of heating	Temp. (℃)	Time (min.)
Pork roast, 1 kg	Wire rack insert + universal tray	3		200-210	50-60
Joint of pork, 1 kg	Wire rack insert + universal tray	3		160-180	100-120
Leg of lamb on the bone, 1 kg	Wire rack insert + universal tray	3		170-180	100-120
Poultry(Chicken/Duck/Turkey)					
Chicken, Whole, 1.2 kg*	Wire rack + Universal tray (to catch drippings)	3 1		205	80-100*
Chicken pieces	Wire rack insert + universal tray	3		200-220	25-35
Duck breast	Wire rack insert + universal tray	3		180-200	20-30
Small turkey, whole, 5 kg	Wire rack insert + universal tray	3		180-200	120-150
Vegetables					
Vegetables, 0.5 kg	Wire rack insert + universal tray	3		220-230	15-20
Baked potato halves, 0.5 kg	Wire rack insert + universal tray	3		200	45-50
Fish					
Fish fillet, baked	Wire rack insert + universal tray	3		200-230	10-15
Roast fish	Wire rack insert + universal tray	3		180-200	30-40

* Turnover after half of time

NV73J7740RS_EU_DG68-00614E-03_EN.indd 42 2018-04-17 5:27:21

Grilling

We recommend preheat the oven using large grill mode. Turn over after half of time.

Food	Accessory	Level	Type of heating	Temp. (°C)	Time (min.)
Bread					
Toast	Wire rack	5		270-300	2-4
Cheese toast	Universal tray	4		200	4-8
Beef					
Steak*	Wire rack insert + universal tray	4		240-250	15-20
Burgers*	Wire rack insert + universal tray	4		250-270	13-18
Pork					
Pork chops	Wire rack insert + universal tray	4		250-270	15-20
Sausages	Wire rack insert + universal tray	4		260-270	10-15
Poultry					
Chicken, breast	Wire rack insert + universal tray	4		230-240	30-35
Chicken, drumstick	Wire rack insert + universal tray	4		230-240	25-30

* Turnover after $^{2}/_{3}$ of the cooking time.

NV73J7740RS_EU_DG68-00614E-03_EN.indd 43 2018-04-17 5:27:21

Cooking Smart

Frozen ready-meal

Food	Accessory	Level	Type of heating	Temp. (°C)	Time (min.)
Frozen pizza, 0.4-0.6 kg	Wire rack	3		200-220	15-25
Frozen lasagne	Wire rack	3		180-200	45-50
Frozen oven chips	Universal tray	3		220-225	20-25
Frozen croquettes	Universal tray	3		220-230	25-30
Frozen oven camembert	Wire rack	3		190-200	10-15
Frozen baguettes with topping	Wire rack insert + universal tray	3		190-200	10-15
Frozen fish fingers	Wire rack insert + universal tray	3		190-200	15-25
Frozen fish burger	Wire rack	3		180-200	20-35

NV73J7740RS_EU_DG68-00614E-03_EN.indd 44 2018-04-17 5:27:21

Vapour cooking

With Vapour enabled, the oven generates vapour and evenly distributes inside the cooking chamber, covering the whole area every racks and corners. This helps brown food, giving a crispy top and soft, juicy inside.
Fill the water tank with drinkable water up to the max line, and select a Vapour level that best suits your recipe.

Vapour convection

It is recommended to preheat the oven. Preheating helps give food a vivid texture.

Food	Accessory	Level	Vapour level	Temp. (°C)	Time (min.)
Chilled bread rolls	Universal tray	3	Low	180-185	15-20
Chilled croissants	Universal tray	3	Low	180-190	10-15
White loaf bread/Mixed loaf bread	Wire rack	2	Med	180-185	40-50
Puff pastry	Universal tray	3	Low	175-185	15-20
Flan/cream	Wire rack	3	Low	120-130	25-30
Soufflé	Wire rack	3	Low	170-180	15-20
Frozen self-rising pizza	Wire rack	3	Med	190-210	15-20
Baguette*	Universal tray	3	Max	180-200	25-30

* Baguette is needed the vapour only in the beginning of baking. We recommend use the vapour convection mode for 10 min and use the convection mode with same temperature during remained baking time.

NV73J7740RS_EU_DG68-00614E-03_EN.indd 45 2018-04-17 5:27:21

Cooking Smart

Vapour top heat + convection

We recommend adjust the cooking mode after half of the cooking time, in order to remove vapour for crispy texture. We recommend use the top heat + convection mode or convection mode and keep the temperature.

Food	Accessory	Level	Vapour level	Temp. (°C)	Time (min.)
Pork roast with crackling, 1.2 kg	Wire rack insert + universal tray	3	Med	170-180	90-120
Chicken, whole, 1.2 kg	Wire rack insert + universal tray	3	Med	190-200	55-65
Chicken pieces	Wire rack insert + universal tray	3	Med	210-220	25-30
Roast duck breast	Wire rack insert + universal tray	3	Med	170-180	15-25
Duck, whole, 2.5 kg	Wire rack insert + universal tray	3	Med	170-180	120-150
Small turkey, whole, 4 kg	Wire rack insert + universal tray	3	Med	180-200	110-140
Whole fish, 0.5 kg*	Wire rack insert + universal tray	3	Med	160-180	20-30
Fish fillets*	universal tray	3	Low	190-200	10-20

* We recommend use the vapour top heat + convection during cooking time for moist taste.

Vapour bottom heat + convection

We recommend preheat the oven in vapour mode for crispy baking.

Food	Accessory	Level	Vapour level	Temp. (°C)	Time (min.)
Homemade pizza	Universal tray	2	Med	190-200	15-20
Self-rising pizza	Universal tray	2	Med	190-210	15-20
Quiche Lorraine	Universal tray	2	Low	180-190	20-30
Bread rolls	Universal tray	2	Low	180-190	15-20
Foccacia	Universal tray	2	Low	200-210	15-20

NV73J7740RS_EU_DG68-00614E-03_EN.indd 46 2018-04-17 5:27:21

Pro-Roasting

This mode includes an automatic heating-up cycle up to 220 °C. The top heater and the convection fan are operating during the process of searing the meat. After this stage the food is cooked gently by the low temperature of pre-selection. This process is done while the top and the bottom heaters are operating. This mode is suitable for meat roasts and poultry.

Food	Accessory	Level	Temp. (°C)	Time (hrs.)
Roast beef	Wire rack insert + universal tray	3	80-100	3-4
Pork roast	Wire rack insert + universal tray	3	80-100	4-5
Lamb roast	Wire rack insert + universal tray	3	80-100	3-4
Duck breast	Wire rack insert + universal tray	3	70-90	2-3

NV73J7740RS_EU_DG68-00614E-03_EN.indd 47 2018-04-17 5:27:21

Cooking Smart

ECO convection

This mode uses the optimized heating system so that you save the energy during cooking your dishes. The times of this category are suggested to not be preheated before cooking for saving more energy.

Food	Accessory	Level	Temp. (°C)	Time (min.)
Meringues, 0.2-0.3 kg	Universal tray	2	90-100	100-140
Fruit crumble, 0.8-1.2 kg	Wire rack	2	160-180	60-80
Jacket potatoes, 0.4-0.8 kg	Universal tray	2	190-200	70-80
Sausages, 0.3-0.5 kg	Wire rack insert + universal tray	3	160-180	20-30
Frozen oven chips, 0.3-0.5 kg	Universal tray	3	180-200	25-35
Frozen potato wedges, 0.3-0.5 kg	Universal tray	3	190-210	25-35
Fish fillets, baked, 0.4-0.8 kg	Wire rack insert + universal tray	3	200-220	30-40
Crispy fish fillets, breaded, 0.4-0.8 kg	Wire rack insert + universal tray	3	200-220	30-45
Roast sirloin of beef, 0.8-1.2 kg	Wire rack insert + universal tray	2	180-200	65-75
Roast vegetables, 0.4-0.6 kg	Universal tray	3	200-220	25-35

NV73J7740RS_EU_DG68-00614E-03_EN.indd 48 2018-04-17 5:27:21

Auto cook programmes

The following table presents 40 auto programmes for cooking, roasting and baking.
It contains its quantities, weight ranges and appropriate recommendations. Cooking modes and times have been pre-programmed for your convenience. You will find some recipes for the auto programmes in your instruction book.
Auto cook programmes 1 to 19, 38 and 39 include preheating and display the preheating progress.
Auto Cook programmes 7, 8, 10, 11 and 12 are supported by vapour interval. Please fill tank with cold water before use. Please put the food in the oven after preheating beep.
Then, press **Cooking time** to start Auto Cook.

⚠ WARNING

Always use oven gloves while taking out food.

No.	Food	Weight (kg)	Accessory	Level
A 1	Potato gratin	1.0-1.5	Wire rack	3
		Prepare fresh potato gratin using an ovenproof dish, 22-24 cm. Start programme, after preheating beep sounds, put dish in the centre of tray.		
A 2	Vegetable gratin	0.8-1.2	Wire rack	3
		Prepare fresh vegetable gratin using an ovenproof dish, 22-24 cm. Start programme, after preheating beep sounds, put dish in the centre of tray.		
A 3	Pasta bake	1.2-1.5	Wire rack	3
		Prepare pasta gratin using 22-24 cm ovenproof dish. Start programme, after preheating beep sounds, put dish in the centre of tray.		
A 4	Lasagne	1.0-1.5	Wire rack	3
		Prepare homemade lasagne using 22-24 cm ovenproof dish. Start programme, after preheating beep sounds, put dish in the centre of tray.		
A 5	Ratatouille	1.2-1.5	Wire rack	3
		Put ingredients for ratatouille in casserole dish with lid. Start programme, after preheating beep sounds, put dish in the centre of tray. Bake covered. Stir before serving.		

NV73J7740RS_EU_DG68-00614E-03_EN.indd 49 2018-04-17 5:27:21

Cooking Smart

No.	Food	Weight (kg)	Accessory	Level
A 6	Apple pie	1.2-1.4	Wire rack	2
		Prepare apple pie using a 24-26 cm round metal baking tin. Start programme, after preheating beep sounds, put tin in the centre of tray.		
A 7	Croissants	0.3-0.4	Universal tray	3
		Fill water tank. Prepare croissants (chilled ready dough). Put on baking paper on tray. Start programme, after preheating beep sounds, insert tray.		
A 8	Apple puff pastry	0.3-0.4	Universal tray	3
		Fill water tank. Put apple puff pastries on baking paper on tray. Start programme, after preheating beep sounds, insert tray.		
A 9	Quiche Lorraine	1.2-1.5	Wire rack	2
		Prepare quiche dough, put in a round quiche dish with 25 cm diameter. Start programme, after preheating beep sounds add filling and put dish in the centre of tray.		
A 10	White loaf bread	0.6-0.7	Wire rack	2
		Fill water tank. Prepare dough and put into a black metal rectangular baking dish (length 25 cm). Start programme, after preheating beep sounds put dish in the centre of tray.		
A 11	Mixed grain loaf bread	0.8-0.9	Wire rack	3
		Fill water tank. Prepare dough and put into a black metal rectangular baking dish (length 25 cm). Start programme, after preheating beep sounds put dish in the centre of tray.		
A 12	Bread rolls	0.3-0.5	Universal tray	3
		Fill water tank. Prepare rolls (chilled ready dough). Put on baking paper on tray. Start programme, after preheating beep insert tray.		
A 13	Fruit crumbles	0.8-1.2	Wire rack	3
		Put fresh fruits (raspberries, blackberries, apple slices, or pear slices) into oven dish 22-24 cm. Distribute crumbles on top. Start programme, after preheating beep sounds, put dish in the centre of tray.		

NV73J7740RS_EU_DG68-00614E-03_EN.indd 50 2018-04-17 5:27:21

No.	Food	Weight (kg)	Accessory	Level
A 14	Scones	0.5-0.6	Universal tray	3
		Put scones (5-6 cm diameter) on baking paper on tray. Start programme, after preheating beep sounds, insert tray.		
A 15	Sponge cake	0.5-0.6	Wire rack	3
		Prepare dough and put into a black metal round baking tin with 26 cm diameter. Start programme, after preheating beep sounds, put tin in the centre of tray.		
A 16	Marble cake	0.7-0.8	Wire rack	2
		Prepare dough and put into a metal round gugelhupf or bundt tin. Start programme, after preheating beep sounds, put tin in the centre of tray.		
A 17	Dutch loaf cake	0.7-0.8	Wire rack	2
		Prepare dough and put into a black metal rectangular baking dish (length 25 cm). Start programme, after preheating beep sounds, put tin in the centre of tray.		
A 18	Fruit flan base	0.4-0.5	Wire rack	3
		Put the dough into a black metal buttered baking dish for cake base. Start programme, after preheating beep sounds, put tin in the centre of tray.		
A 19	Brownies	0.7-0.8	Wire rack	3
		Prepare dough using a 20-24 cm ovenproof dish. Start programme, after preheating beep sounds, put dish in the centre of tray.		
A 20	Roast sirloin of beef	0.9-1.1	Wire rack insert + universal tray	2
		1.1-1.3		
		Season the beef and leave in refrigerator for 1 hour. Put on the wire rack with fat-side-up.		
A 21	Slow cooked beef roast	0.9-1.1	Wire rack insert + universal tray	2
		1.1-1.3		
		Season the beef and leave in refrigerator for 1 hour. Put on the wire rack with fat-side-up.		

NV73J7740RS_EU_DG68-00614E-03_EN.indd 51 2018-04-17 5:27:21

Cooking Smart

No.	Food	Weight (kg)	Accessory	Level
A 22	Herb roasted lamb chops	0.4-0.6	Wire rack insert + universal tray	4
		0.6-0.8		
		Marinate the lamb chops with herbs and spices and put them on wire rack.		
A 23	Leg of lamb on the bone	1.0-1.5	Wire rack insert + universal tray	3
		1.5-2.0		
		Marinate the lamb and put on wire rack.		
A 24	Pork roast with crackling	0.8-1.0	Wire rack insert + universal tray	3
		1.0-1.2		
		Put pork roast with fat side to the top on wire rack.		
A 25	Rack of pork rib	0.8-1.0	Wire rack insert + universal tray	4
		1.0-1.2		
		Put rack of pork rib on wire rack.		
A 26	Chicken, whole	0.9-1.1	Wire rack insert + universal tray	2
		1.1-1.3		
		Rinse and clean chicken. Brush chicken with oil and spices. Put it breast side down on the wire rack and turn over, as soon as the oven beeps.		
A 27	Chicken, breast	0.4-0.6	Wire rack insert + universal tray	4
		0.6-0.8		
		Marinate breasts and put on the wire rack.		
A 28	Chicken, drumsticks	0.6-0.8	Wire rack insert + universal tray	4
		0.8-1.0		
		Brush with oil and spices and put on wire rack.		
A 29	Duck, breast	0.3-0.4	Wire rack insert + universal tray	4
		0.4-0.5		
		Put duck breasts with fat-side-up on the wire rack. The first setting is for medium, the second for medium- well done cooking level.		

NV73J7740RS_EU_DG68-00614E-03_EN.indd 52 2018-04-17 5:27:21

No.	Food	Weight (kg)	Accessory	Level
A 30	Trout fillet, baked	0.3-0.5	Universal tray	4
		0.5-0.7		
		Put trout fillets with the skin side up on the tray.		
A 31	Trout	0.3-0.5	Wire rack insert + universal tray	4
		0.5-0.7		
		Rinse and clean the fish and put head to tail on the wire rack. Add lemon juice, salt and herbs inside fish. Cut skin surface with knife. Brush oil and salt.		
A 32	Sole	0.3-0.5	Universal tray	3
		0.5-0.7		
		Put Sole on baking paper on the tray. Cut surface with knife.		
A 33	Salmon fillet	0.4-0.6	Wire rack insert + universal tray	4
		0.6-0.8		
		Rinse and clean fillets or steaks. Put fillets skin side up on wire rack.		
A 34	Roasted vegetables	0.4-0.6	Universal tray	4
		0.6-0.8		
		Rinse and prepare slices of courgette, egg plant, pepper, onion and cherry tomatoes. Brush with olive oil, herbs and spices. Distribute evenly on tray.		
A 35	Baked potato halves	0.6-0.8	Universal tray	3
		0.8-1.0		
		Cut large potatoes (each 200 g) into halves lengthways. Put with cut side up on tray and brush with olive oil, herbs and spices.		
A 36	Frozen oven chips	0.3-0.5	Universal tray	3
		0.5-0.7		
		Distribute frozen oven chips evenly on tray.		

NV73J7740RS_EU_DG68-00614E-03_EN.indd 53 2018-04-17 5:27:22

Cooking Smart

No.	Food	Weight (kg)	Accessory	Level
A 37	Frozen potato wedges	0.3-0.5	Universal tray	3
		0.5-0.7		
		Distribute frozen potato wedges evenly on tray.		
A 38	Frozen pizza	0.3-0.6	Wire rack	3
		0.6-0.9		
		Put the frozen pizza in the middle of the wire rack. Start programme, after preheating beep sounds, insert tray. The first setting is for thin Italian pizza, the second setting for thick pan pizza.		
A 39	Homemade pizza	0.8-1.0	Universal tray	2
		1.0-1.2		
		Prepare homemade pizza with the yeast dough and put it on the tray. The weight include dough and topping such as sauce, vegetables, ham and cheese. Start programme, after preheating beep sounds, insert tray.		
A 40	Fermentation yeast dough	0.5-0.6	Wire rack	2
		0.7-0.8		
		Prepare dough in bowl, cover with cling film. Put in centre of tray. The first setting is for pizza and cake dough, the second setting for bread dough.		

NV73J7740RS_EU_DG68-00614E-03_EN.indd 54 2018-04-17 5:27:22

Test Dishes

According to standard EN 60350-1

1. Baking

The recommendations for baking refer to a preheated oven. Do not use the fast preheat function. Always put trays the slanted side to the door front.

Type of food	Accessory	Level	Type of heating	Temp. (°C)	Time (min.)
Small cakes	Universal tray	3		165	25-30
		3		165	25-30
		1+4		155	35-40
Shortbread	Universal tray	1+4		140	28-33
Fatless sponge cake	Wire rack + Spring form cake tin (Dark coated, ø 26 cm)	2		160	35-40
		2		160	35-40
		1+4		155	45-50
Apple pie	Wire rack + 2 Spring form cake tins * (Dark coated, ø 20 cm)	1 placed diagonally		160	70-80
	Universal tray + Wire rack + 2 Spring form cake tins ** (Dark coated, ø 20 cm)	1+3		160	80-90

* Two cakes are arranged on the grid at the back left and at the front right.
** Two cakes are arranged in the center on top of each other.

NV73J7740RS_EU_DG68-00614E-03_EN.indd 55 2018-04-17 5:27:22

Cooking Smart

2. Grilling

Preheat the empty oven for 5 minutes using Large Grill function.

Type of food	Accessory	Level	Type of heating	Temp. (°C)	Time (min.)
White bread toast	Wire rack	5		300 (max)	1-2
Beef burgers* (12 ea)	Wire rack insert + Universal tray (to catch drippings)	4		300 (max)	1st 15-18 2nd 5-8

* Turn over after 2/3 of the cooking time.

3. Roasting

Type of food	Accessory	Level	Type of heating	Temp. (°C)	Time (min.)
Whole chicken	Wire rack + Universal tray (to catch drippings)	3 1		205	80-100*

* Turnover after half of time

NV73J7740RS_EU_DG68-00614E-03_EN.indd 56 2018-04-17 5:27:22

Collection of frequent Auto cook recipes

Potato gratin

Ingredients 800 g potatoes, 100 ml milk, 100 ml cream, 50 g beaten whole egg, 1 tbsp each of salt, pepper, nutmeg, 150 g grated cheese, butter, thyme

Directions Peel potatoes and slice them to 3 mm thickness. Rub the butter all over the surface of a gratin dish (22-24 cm). Spread the slices on a clean towel and keep them covered with the towel while you prepare the rest of the ingredients.
Mix the rest of the ingredients except for grated cheese into a large bowl and stir well. Layer the potato slices in the dish slightly overlapping and pour the mixture over the potatoes. Spread the grated cheese over the top and bake. After cooking, serve sprinkled with a few fresh thyme leaves.

Vegetable gratin

Ingredients 800 g vegetables (courgette, tomato, onion, carrot, pepper, pre-cooked potatoes), 150 ml cream, 50 g beaten whole egg, 1 tbsp each of salt, herb(pepper, parsley or rosemary), 150 g grated cheese, 3 tbsp olive oil, Some thyme leaves

Directions Wash the vegetables and slice them to 3-5 mm thickness. Layer the slices on a gratin dish (22-24 cm) and pour the oil on the vegetables. Mix the rest of the ingredients except for grated cheese and pour on the vegetables. Spread the grated cheese over the top and bake. Then serve sprinkled with a few fresh thyme leaves.

NV73J7740RS_EU_DG68-00614E-03_EN.indd 57 2018-04-17 5:27:22

Cooking Smart

Lasagne

Ingredients 2 tbsp olive oil, 500 g minced beef, 500 ml tomato sauce, 100 ml beef stock, 150 g dried lasagne sheets, 1 onion (chopped), 200 g grated cheese, 1 tbsp each of dried parsley flakes, oregano, basil

Directions Prepare tomato meat sauce. Heat the oil in a frying pan, then cook the minced beef and chopped onion for about 10 min until browned all over. Pour over the tomato sauce and beef stock, add the dried herbs. Bring up to the boil, then simmer for 30 min.
Cook lasagne noodles according to package directions. Layer the lasagne noodle, meat sauce, and cheese then repeat. Then sprinkle evenly with remaining cheese on the top of layer of noodles and bake.

Apple pie

Ingredients

- **Pastry**: 275 g flour, 1/2 tbsp salt, 125 g white castor sugar, 8 g vanilla sugar, 175 g cold butter, 1 egg(beaten)
- **Filling**: 750 g firm whole apples, 1 tbsp lemon juice, 40 g sugar, 1/2 tbsp cinnamon, 50 g seedless raisins, 2 tbsp bread crumbs

Directions Sift the flour with the salt above a big bowl. Sift the castor sugar and vanilla sugar with it. Cut with 2 knives the butter through the flour in small cubes. Add 3/4 of the beaten egg. Knead all the ingredients in the food processor until a crumbly mass appears. Form the dough into a ball with your hands. Wrap it in plastic foil and leave it chilled for about 30 min.
Grease the spring tin (24-26 cm diameter) and dust the surface with flour. Roll out 3/4 of the dough till 5 mm thickness. Put it in the tin (bottom and sides).
Peel and core the apples. Cut them in cubes of about 3/4 x 3/4 cm. Sprinkle the apples with lemon juice and mix well. Wash and dry the currants and raisins. Add sugar, cinnamon, raisins and currants. Mix well and sprinkle the bottom of dough with bread crumbs. Press slightly. Roll out the rest of the dough. Cut the dough in small strips and put them cross wise on the filling. Brush the pie evenly with the rest of the beaten egg.

NV73J7740RS_EU_DG68-00614E-03_EN.indd 58 2018-04-17 5:27:22

Quiche Lorraine

Ingredients
- **Pastry**: 200 g plain flour, 80 g butter, 1 egg
- **Filling**: 75 g cubed fatless bacon, 125 ml cream, 125 g crème fraiche, 2 eggs, beaten, 100 g grated cheese from Switzerland, salt and pepper

Directions To make the pastry, put the flour, butter and egg in a bowl and mix to a soften pastry and then rest it in the refrigerator for 30 min. Roll out the pastry and placed in the greased ceramic dish for quiche (25 cm diameter). Prick the bottom with a fork. Mix the egg, cream, crème fraiche, cheese, salt and pepper. Pour it on the pastry just before baking.

Fruit crumbles

Ingredients
- **Topping**: 200 g flour, 100g butter, 100 g sugar, 2 g salt, 2 g cinnamon powder
- **Fruit**: 600 g mixed fruitsr

Directions Mix all ingredients until to be crumble for making topping. Spread the mixed fruits into an oven dish and sprinkle the crumble.

Homemade pizza

Ingredients
- **Pizza dough**: 300 g flour, 7 g dried yeast, 1 tbsp olive oil, 200 ml warm water, 1 tbsp sugar and salt
- **Topping**: 400 g sliced vegetable (aubergine, courgette, onion, tomato), 100 g ham or bacon (chopped), 100 g grated cheese

Directions Put the flour, yeast, oil, salt, sugar and warm water in a bowl and mix to a wettish dough. Knead in a mixer or by hand about 5-10 min. Cover with lid and place in oven for 30 min at 35 °C to prove. Roll out the dough on a floured surface into a rectangle shape and put on the tray or pizza pan. Spread the tomato puree on the dough and place ham, mushroom, olive and tomato. Sprinkle evenly with cheese on the top and bake.

NV73J7740RS_EU_DG68-00614E-03_EN.indd 59 2018-04-17 5:27:22

Cooking Smart

Roast sirloin of beef

Ingredients	1 kg sirloin of beef joint, 5 g salt, 1 g pepper, 3 g each of rosemary, thyme
Directions	Season the beef with salt, pepper and rosemary and leave in refrigerator for 1 hour. Put on the wire rack insert. Put it in the oven and cook.

Herb roasted lamb chops

Ingredients	1 kg lamb chops (6 pieces), 4 large garlic cloves (pressed), 1 tbsp fresh thyme (crushed), 1 tbsp fresh rosemary (crushed), 2 tbsp salt, 2 tbsp olive oil
Directions	Mix the salt, garlic, herbs and oil and add the lamb. Turn to coat and leave at a room temperature at least 30 min to 1 hour.

Rack of pork rib

Ingredients	2 racks pork spare ribs, 1 tbsp black peppercorns, 3 bay leaves, 1 onion (chopped), 3 garlic cloves (chopped), 85 g brown sugar, 3 tbsp worcestershire sauce, 2 tbsp tomato puree, 2 tbsp olive oil
Directions	Make a barbecue sauce. Heat oil in a sauce pan and add the onion. Cook until softened and add remaining ingredients. Broil and reduce heat and simmer for 30 min until thickened. Marinate the rib with the barbecue sauce at least 30 min to 1 hour.

NV73J7740RS_EU_DG68-00614E-03_EN.indd 60 2018-04-17 5:27:22

Maintenance

Cleaning

⚠ WARNING

- Make sure the oven and accessories are cool before cleaning.
- Do not use abrasive cleaning agents, hard brushes, scouring pads or cloths, steel wool, knives or any other abrasive materials.

Oven interior

- For cleaning the interior of the oven, use a clean cloth and a mild cleaning agent or warm soapy water.
- Do not hand-clean the door seal.
- To avoid damaging the enamelled oven surfaces, only use standard oven cleaners.
- To remove stubborn soils, use a special oven cleaner.

Oven exterior

For cleaning the exterior of the oven such as the oven door, handle, and display, use a clean cloth and a mild cleaning detergent or warm soapy water, and dry with a kitchen roll or dry towel.
Grease and dirt can remain, especially around the handle because of the hot air coming from inside. It is recommended to clean the handle after each use.

Accessories

Wash the accessories after every use, and dry it with a tea towel. To remove stubborn impurities, soak the used accessories in warm soapy water for about 30 minutes before washing.

Catalytic enamel surface (applicable models only)

The removable parts are coated with dark grey catalytic enamel. They can be soiled with oil and fat spattered by the circulating air during convection heating. However, these impurities burn off at oven temperatures of 200 °C or above.

1. Remove all accessories from the oven.
2. Clean the interior of the oven.
3. Select Convection mode with max temperature, and run the cycle for an hour.

NV73J7740RS_EU_DG68-00614E-03_EN.indd 61 2018-04-17 5:27:22

Maintenance

Door

Do not remove the oven door unless for cleaning purposes. To remove the door for cleaning, follow these instructions.

⚠ WARNING

The oven door is heavy.

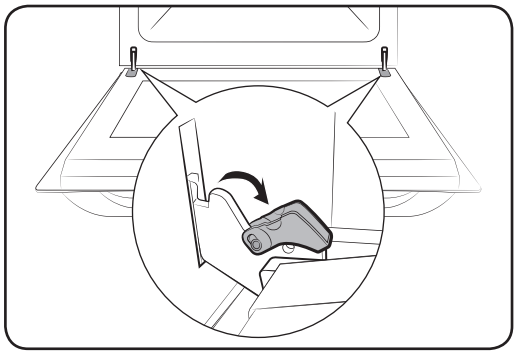

1. Open the door and flip open the clips at both hinges.

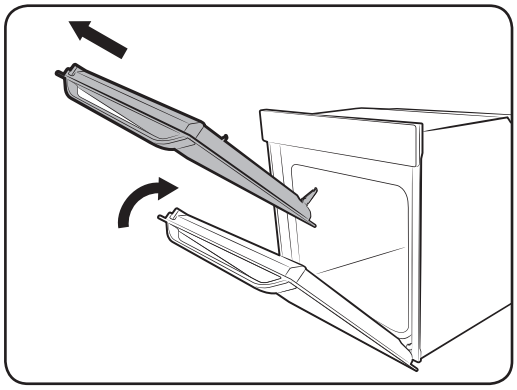

2. Close the door approximately 70°. Hold the oven door by the sides using both hands, and lift and pull upwards until the hinges are removed.
3. Clean the door with soapy water and a clean cloth.

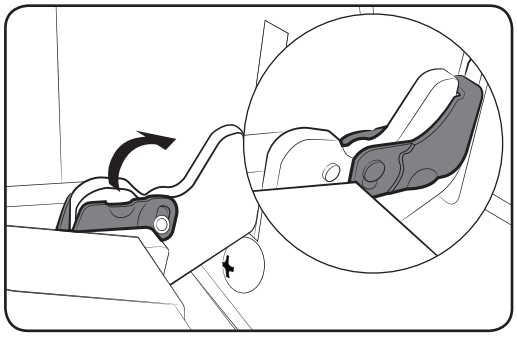

4. When done, follow steps 1 to 2 above in the reverse order to reinstall the door. Make sure the clips are hinged on both sides.

NV73J7740RS_EU_DG68-00614E-03_EN.indd 62 2018-04-17 5:27:23

Door glass

Depending on the model, the oven door is equipped with 3-4 sheets of glass placed against each other. Do not remove the door glass unless for cleaning purposes. To remove the door glass for cleaning, follow these instructions.

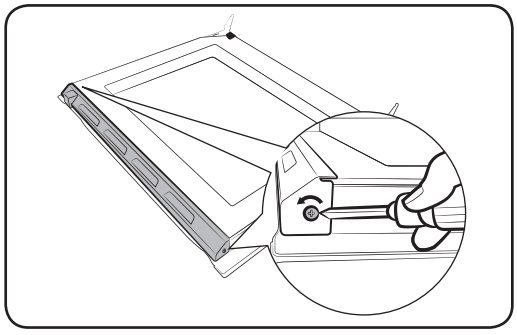

1. Use a screwdriver to remove the screws on the left and right sides.

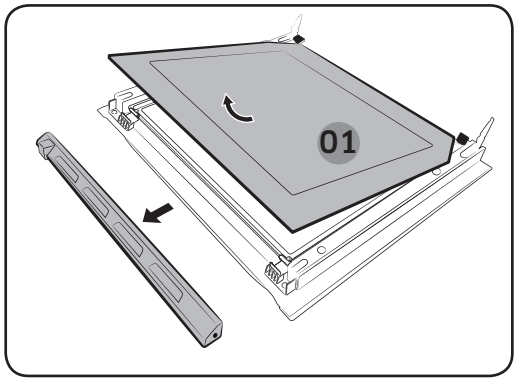

2. Detach the coverings in the arrow directions
3. Remove the first sheet from the door.

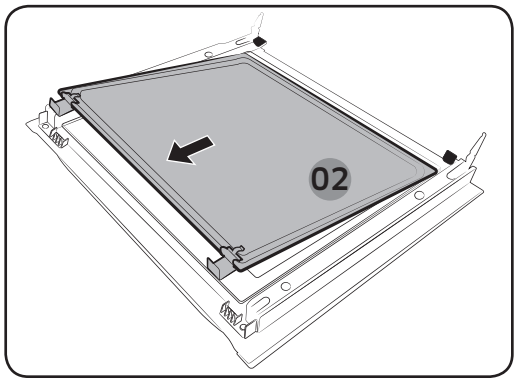

4. Remove the second sheet from the door in the arrow direction.
5. Clean the glass with soapy water and a clean cloth.

NV73J7740RS_EU_DG68-00614E-03_EN.indd 63 2018-04-17 5:27:23

Maintenance

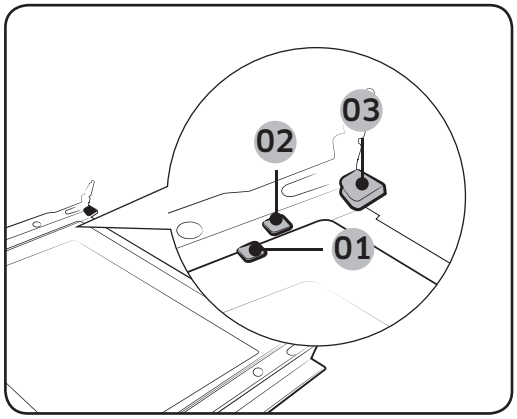

01 Support clip 1
02 Support clip 2
03 Support clip 3

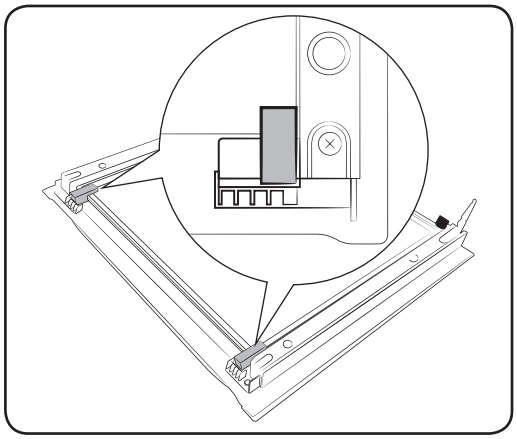

6. When done, reinsert the sheets as follows:
- Insert sheet 2 between support clip 1 and 2, and sheet 1 into support clip 3 in this order.

7. Check if the glass rubbers fit into and secure the glass sheet properly.
8. Follow steps 1-2 above in the reverse order to reinstall the door.

⚠ WARNING

To prevent heat leaks, make sure you propery reinsert the glass sheets.

NV73J7740RS_EU_DG68-00614E-03_EN.indd 64 2018-04-17 5:27:24

Water collector

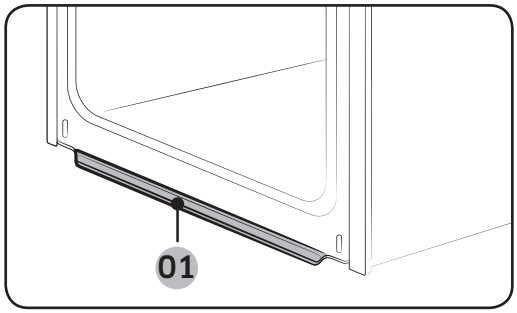

01 Water collector

The water collector collects not only excess moisture from cooking but also food residue. Regularly empty and clean the water collector.

⚠ WARNING

If you encounter a water leak from the water collector, contact us at a local Samsung service center.

Ceiling (applicable models only)

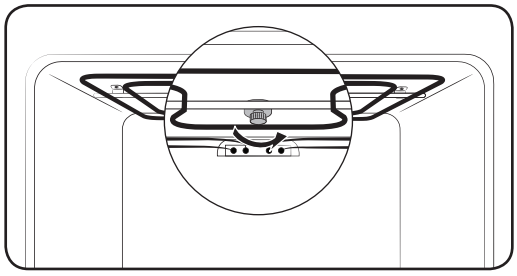

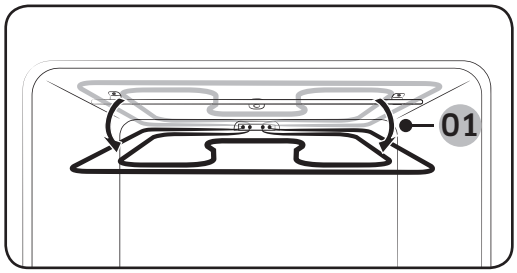

01 Approx. 12 º

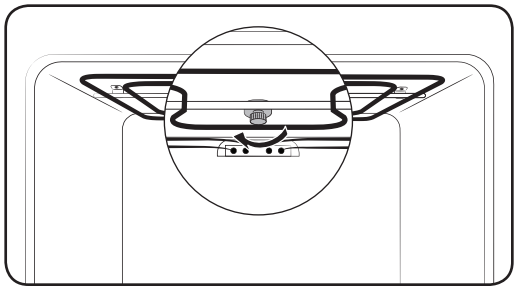

1. Put down the grill heater. For this, turn the circular nut anticlockwise while holding the grill heater. The grill heater is not a removable part. Do not force the grill heater down.

2. Clean the ceiling of the oven with soapy water and a clean cloth.

3. When done, put the grill heater back and turn the circular nut clockwise.

NV73J7740RS_EU_DG68-00614E-03_EN.indd 65 2018-04-17 5:27:24

Maintenance

Side runners (applicable models only)

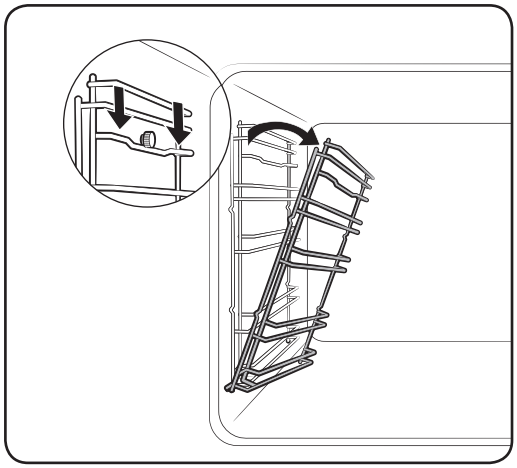

1. Press the top line of the left side runner, and lower by approximately 45 º.

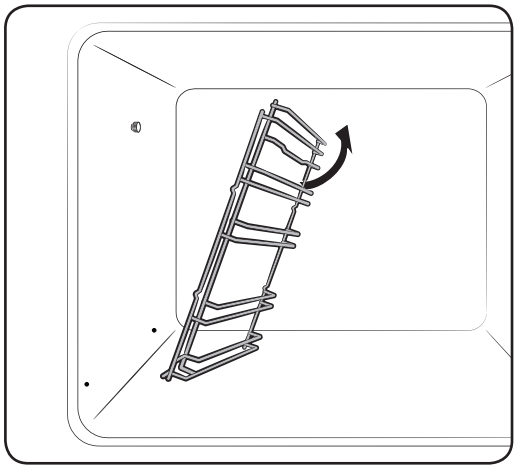

2. Pull and remove the bottom line of the left side runner.
3. Remove the right side runner in the same way.
4. Clean both side runners.
5. When done, follow steps 1 to 2 above in the reverse order to reinsert the side runners.

NOTE

The oven operates without the side runners and racks in position.

NV73J7740RS_EU_DG68-00614E-03_EN.indd 66 2018-04-17 5:27:25

Telescopic rails (applicable models only)

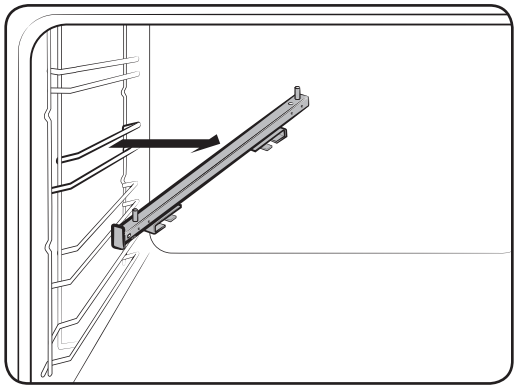

1. On the left Side runner, gently press the upper side of the rail to remove in the arrow direction.
2. Repeat the above step on the right Side runner to remove the right rail.
3. Clean the left and right Telescopic rails with soapy water and a cloth.

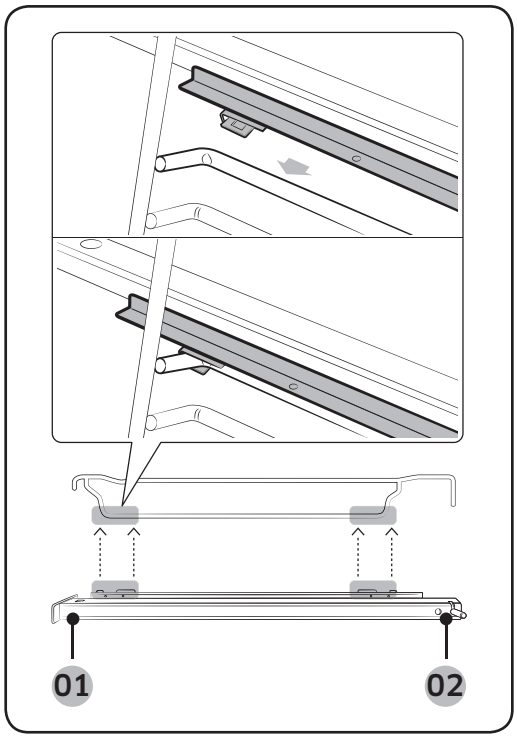

01 Front
02 Rear

4. When cleaning is complete, reinsert both Telescopic rails by repeating steps 1-2 above in the reverse order.
   Make sure the front and rear clips of the rail fit into the Side runner.

NOTE

It is recommended to insert the Telescopic rail into level 3 on the Side runner.

NV73J7740RS_EU_DG68-00614E-03_EN.indd 67 2018-04-17 5:27:25

Maintenance

Replacement

Bulbs

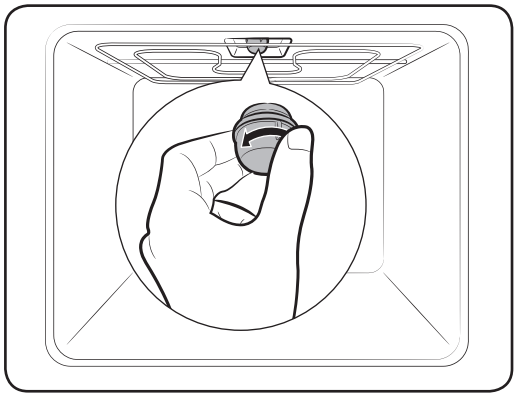

1. Remove the glass cap by turning anti-clockwise.
2. Replace the oven light.
3. Clean the glass cap.
4. When done, follow step 1 above in the reverse order to reinsert the glass cap.

⚠ WARNING

- Before replacing a bulb, turn off the oven and unplug the power cord.
- Use only 25-40 W/220-240 V, 300 °C heat-resistant bulbs. You can purchase approved bulbs at a local Samsung service center.
- Always use a dry cloth when handling a halogen bulb. This is to prevent the bulb from being tampered with fingerprints or sweat, resulting in a shortened lifecycle.

NV73J7740RS_EU_DG68-00614E-03_EN.indd 68 2018-04-17 5:27:26

Troubleshooting

Checkpoints

If you encounter a problem with the oven, first check the table below and try the suggestions. If the problem continues, contact a local Samsung service centre.

Problem	Cause	Action
The buttons cannot be pressed properly.	• If there is foreign matter caught between the buttons	• Remove the foreign matter and try again.
	• Touch model: if there is moisture on the exterior	• Remove the moisture and try again.
	• If the lock function is set	• Check whether the lock function is set.
The time is not displayed.	• If there is no power supplied	• Check whether there is power supplied.
The oven does not work.	• If there is no power supplied	• Check whether there is power supplied.
The oven stops while in operation.	• If it is unplugged from the power socket	• Reconnect the power.
The power turns off during operation.	• If continuous cooking takes a long time	• After cooking for a long time, let the oven cool.
	• If the cooling fan does not work	• Listen for the sound of the cooling fan.
	• If the oven is installed in a place without good ventilation	• Keep the gaps specified in the product installation guide.
	• When using several power plugs in the same socket	• Use a single plug.
There is no power to the oven.	• If there is no power supplied	• Check whether there is power supplied.
The oven exterior is too hot during operation.	• If the oven is installed in a place without good ventilation	• Keep the gaps specified in the product installation guide.
The door cannot be opened properly.	• If there is food residue stuck between the door and product interior	• Clean the oven well and then open the door again.

NV73J7740RS_EU_DG68-00614E-03_EN.indd 69 2018-04-17 5:27:26

Troubleshooting

Problem	Cause	Action
The interior light is dim or does not turn on.	• If the lamp turns on and then off	• The lamp automatically turns off after a certain amount of time to save power. • You can turn it on again by pressing the oven light button.
	• If the lamp is covered by foreign matter during cooking	• Clean the inside of the oven and then check.
Electric shock occurs on the oven.	• If the power supply is not properly grounded	• Check whether the power supply is properly grounded.
	• If you are using a socket without grounding	
There is water dripping.	• There may be water or steam in some cases depending on the food. This is not a product malfunction.	• Let the oven cool and then wipe with a dry dish towel.
There is steam through a crack in the door.		
There is water remaining in the oven.		
The brightness inside the oven varies	• The brightness changes depending on power output changes.	• Power output changes during cooking are not malfunctions, so there is no need to worry.
Cooking is finished, but the cooling fan is still running.	• The fan automatically runs for a certain amount of time to ventilate inside the oven.	• This is not a product malfunction, so there is no need to worry.
The oven does not heat.	• If the door is open	• Close the door and restart
	• If oven controls are not correctly set	• Refer to the chapter on oven operation and reset the oven.
	• If the household fuse has been blown or the circuit breaker has been tripped.	• Replace the fuse or reset the circuit. If it happens repeatedly, call an electrician.

NV73J7740RS_EU_DG68-00614E-03_EN.indd 70 2018-04-17 5:27:26

Problem	Cause	Action
Smoke comes out during operation.	• During initial operation	• Smoke may come from the heater when you first use the oven. This is not a malfunction, and if you run the oven 2-3 times, it should stop happening.
	• If there is food on the heater	• Cool the oven sufficiently and remove the food from the heater.
There is a burning or plastic smell when using the oven.	• If using plastic or other containers that are not heat-resistant	• Use glass containers suitable for hot temperatures.
The oven does not cook properly.	• If the door is often opened during cooking	• Do not frequently open the door unless you are cooking things that need to be turned. If you open the door often, the interior temperature will be lower and this may affect the results of your cooking.
I can hear water boiling during vapour cooking.	• This is because water is heated using the steam heater.	• This is not a product malfunction, so there is no need to worry.
Vapour cooking does not work.	• If there is no water in the water supply tank	• Add water to the tank and try again.
Steam cleaning does not work.	• This is because the temperature is too high	• Let the oven cool and then use.

NV73J7740RS_EU_DG68-00614E-03_EN.indd 71 2018-04-17 5:27:26

Troubleshooting

Information codes

If the oven fails to operate, you may see an information code on the display. Check the table below and try the suggestions.

Code	Meaning	Action
C-20	Sensor malfunctions	Turn off the oven and then restart. If the problem continues, turn off all power for 30 seconds or more and then reconnect. If the problem is not fixed, please contact a service centre.
C-21		
C-22		
C-23		
C-F1	Only occurs during EEPROM Read/ Write	
C-70	Vapour-related problems	
C-72		
C-F0	If there is no communication between the main PCB and sub PCB	
C-F2	Occurs when a communication problem is maintained between the Touch IC <-> Main or Sub micom	Turn off the oven and then restart. If the problem continues, turn off all power for 30 seconds or more and then reconnect. If the problem is not fixed, please contact a service centre.
C-d0	Button problem Occurs when a button is pressed and held for a period of time."	Clean the buttons and make sure there is no water on/around them. Turn off the oven and try again. If the problem continues, contact a local Samsung service centre.
S-01	Safety shutoff Oven has continued operating at a set temperature for an extended time. • Under 105 °C - 16 hours • From 105 °C to 240 °C - 8 hours • From 245 °C to Max - 4 hours	This is not a system failure. Turn off the oven and remove food. Then, try again normally.

NV73J7740RS_EU_DG68-00614E-03_EN.indd 72 2018-04-17 5:27:26

Appendix

Product data sheet

SAMSUNG	SAMSUNG
Model identification	NV73J7740RS
Energy Efficiency Index per cavity (EEI cavity)	81.4
Energy Efficiency Class per cavity	A+
Energy consumption (electricity) required to heat a standardised load in a cavity of an electric heated oven during a cycle in conventional mode per cavity (electric final energy) (EC $_{\text{electric cavity}}$)	0.95 kWh/cycle
Energy consumption required to heat a standardised load in a cavity of an electric heated oven during a cycle in fan-forced mode per cavity (electric final energy) (EC $_{\text{electric cavity}}$)	0.70 kWh/cycle
Number of cavities	1
Heat source per cavity (electricity or gas)	electricity
Volume per cavity (V)	73 l
Type of oven	Built-in
Mass of the appliance (M)	40.8 kg

Data determined according to standard EN 60350-1 and Commission Regulations (EU) No 65/2014 and (EU) No 66/2014.

Energy saving tips

- During cooking, the oven door should remain closed except for turning food over. Do not open the door frequently during cooking to maintain the oven temperature and to save energy.
- Plan oven use to avoid turning the oven off between cooking one item and the next to save energy and reduce the time for re-heating the oven.
- If cooking time is more than 30 minutes, the oven may be switched off 5-10 minutes before the end of the cooking time to save energy. The residual heat will complete the cooking process.
- Wherever possible cook more than one item at a time.

NV73J7740RS_EU_DG68-00614E-03_EN.indd 73 2018-04-17 5:27:26

Memo

Memo

SAMSUNG

QUESTIONS OR COMMENTS?

COUNTRY	CALL	OR VISIT US ONLINE AT
AUSTRIA	0800-SAMSUNG (0800-7267864) [Only for KNOX customers] 0800 400848 [Only for Premium HA] 0800-366661 [Only for Dealers] 0810-112233	www.samsung.com/at/support
BELGIUM	02-201-24-18	www.samsung.com/be/support (Dutch) www.samsung.com/be_fr/support (French)
DENMARK	707 019 70	www.samsung.com/dk/support
FINLAND	030-6227 515	www.samsung.com/fi/support
FRANCE	01 48 63 00 00	www.samsung.com/fr/support
GERMANY	06196 77 555 77	www.samsung.com/de/support
ITALIA	800-SAMSUNG (800.7267864)	www.samsung.com/it/support
CYPRUS	8009 4000 only from landline, toll free	www.samsung.com/gr/support
GREECE	80111-SAMSUNG (80111 726 7864) only from land line (+30) 210 6897691 from mobile and land line	
LUXEMBURG	261 03 710	www.samsung.com/be_fr/support
NETHERLANDS	088 90 90 100	www.samsung.com/nl/support
NORWAY	815 56480	www.samsung.com/no/support
PORTUGAL	808 207 267	www.samsung.com/pt/support
SPAIN	0034902172678	www.samsung.com/es/support
SWEDEN	0771 726 786	www.samsung.com/se/support
SWITZERLAND	0800 726 78 64 (0800-SAMSUNG)	www.samsung.com/ch/support (German) www.samsung.com/ch_fr/support (French)
UK	0330 SAMSUNG (7267864)	www.samsung.com/uk/support
IRELAND (EIRE)	0818 717100	www.samsung.com/ie/support

DG68-00614E-03