AKP 255/JA

12NC: 857725538010

GTIN (EAN) code: 8003437812231

SENSING THE DIFFERENCE



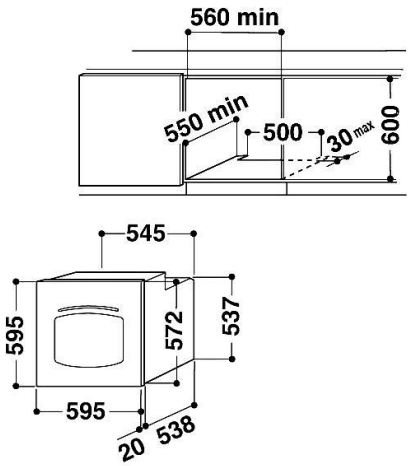

Whirlpool built in electric oven - AKP 255/JA

This Whirlpool built in Oven features: advanced electric technology allowing you to cook dishes saving energy.

Multifunction 8
Multiple cooking methods. The Multifunction 8 feature offers flexible cooking options, to ensure perfect results, whatever the recipe.

Small cavity
This Whirlpool Oven features a compact-size cavity.

Energy class
Outstanding energy savings. Ovens with an A/ A+ energy rating offer an excellent level of energy efficiency, ensuring lower consumption and saving you money on your energy bills.

- Easy Clean Enamel Interior
- Door Glasses Number: 3
- Grill 2500 W
- 2 Grids
- 1 Tray
- Mechanic programmer
- Float Glass and Black Bottom Front Trim
- Niche dimensions (HxWxD): 600x560x550 mm
- Dimensions HxWxD: 595x595x564 mm
- Product Segment: Country
- Jasmine finishing
- 1 Enamelled Fat Pan

AKP 255/JA

12NC: 857725538010

GTIN (EAN) code: 8003437812231

Whirlpool
SENSING THE DIFFERENCE

MAIN FEATURES

Product group	Oven
Commercial code	AKP 255/JA
Main colour of product	Jasmine
Construction type	Built-in
Type of control	Mechanical
Type of control settings	-
Are any hobs controls integrated?	No
Which kind of hobs can be controlled?	-
Automatic programmes	No
Current (A)	13
Voltage (V)	230
Frequency (Hz)	50
Length of Electrical Supply Cord (cm)	-
Plug type	No
Depth with open door 90 degree (mm)	-
Height of the product	595
Width of the product	595
Depth of the product	564
Minimum niche height	0
Minimum niche width	0
Niche depth	0
Net weight (kg)	36
Usable volume (of cavity)	60
Integrated Cleaning system	No
Grids of the cavity	2
Trays	1

TECHNICAL FEATURES

Timer	-
Time control	Mechanical
Time-setting options	Start and Stop
Safety device	-
Interior light	-
Number of interior lights of the cavity	1
Position of interior lights of the cavity	Rear
Oven guides of the cavity	Wall-embedded
Probe of the cavity	No

PERFORMANCES

Energy input	Electric
Type of energy of the cavity	Electricity
Energy efficiency class - NEW (2010/30/EU)	-
Energy consumption per cycle conventional - NEW (2010/30/EU)	0
Energy consumption per cycle forced air convection - NEW (2010/30/EU)	0

