IGNIS

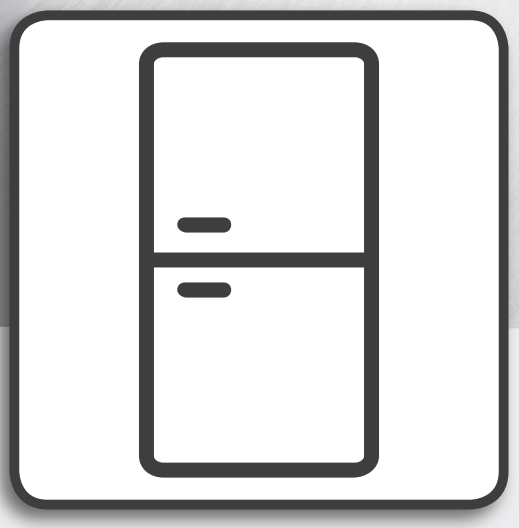

Health & Safety and **Installation** guide

www.whirlpool.eu/register

ENGLISH .....p .3

ENGLISH
HEALTH & SAFETY, and **INSTALLATION** GUIDE



THANK YOU FOR BUYING A IGNIS PRODUCT.
In order to receive a more complete assistance,
please register your appliance on **www.whirlpool.eu/register**

Index

Health and Safety guide

SAFETY RECOMMENDATIONS. 4
SAFEGUARDING THE ENVIRONMENT 7
DECLARATION OF CONFORMITY 8

Installation. 9

SAFETY RECOMMENDATIONS

IMPORTANT SAFETY INSTRUCTIONS

YOUR SAFETY AND SAFETY OF OTHERS IS VERY IMPORTANT.

This manual and the appliance itself provide important safety warnings, to be read and observed at all times.



This is the safety alert symbol. This symbol alerts you to potential hazards that can kill or hurt you and others.
All safety messages will follow the safety alert symbol and either the word **DANGER** or **WARNING**. These words mean:

⚠ DANGER

Indicates a hazardous situation which, if not avoided, will cause serious injury.

⚠ WARNING

Indicates a hazardous situation which, if not avoided, could cause serious injury.

All safety warnings give specific details of the potential risk presented and indicate how to reduce risk of injury, damage and electric shock resulting from improper use of the appliance. Carefully observe the following instructions. Failure to observe these instructions may lead to risks. The manufacturer cannot be held liable for any damage resulting from failure to respect this guide.
The Manufacturer declines any liability for injury to persons or animals or damage to property if the above advice and precautions are not respected.

Keep these instructions close at hand for future reference.

Do not store explosive substances such as aerosol cans and do not place or use gasoline or other flammable materials in or near the appliance.

When scrapping the appliance, make it unusable by cutting off the power cable and removing the doors and shelves (if present) so that children cannot easily climb inside and become trapped.

This appliance does not contain CFCs. The refrigerant circuit contains R600a (HC). Appliances with Isobutane (R600a): isobutane is a natural gas without environmental impact, but is flammable. Therefore, make sure the refrigerant circuit pipes are not damaged. Keep special attention in case of damaged pipes emptying the refrigerant circuit.

C-Pentane is used as blowing agent in the insulation foam and it is a flammable gas.

⚠ WARNING

ge the appliance refrigerant circuit pipes.

⚠ WARNING

Do not use mechanical, electric or chemical means other than those recommended by the Manufacturer to speed up the defrost process.

⚠ WARNING

Do not use or place electrical devices inside the appliance compartments if they are not of the type expressly authorised by the Manufacturer.

⚠ WARNING

Ice makers and or water dispencers not directly connected to the water supply must be filled with potable water only.

⚠ WARNING

Keep ventilation openings, in the appliance enclosure or in the built-in structure, clear of obstruction.

⚠ WARNING

Automatic ice-makers and/or water dispensers must be connected to a water supply that delivers potable water only, with main water pressure between 0,17 and 0,81 MPa (1,7 and 8,1 bar).

To guarantee adequate ventilation, leave a space on both sides and above the appliance. The distance between the rear of the appliance and the wall behind the appliance should be at least 50mm.
A reduction of this space will increase the Energy consumption of product.

INTENDED USE OF THE PRODUCT

This appliance is designed solely for use as domestic usage. To aim the appliance as professional use is forbidden. The manufacturer declines allresponsibility for innapropiate use or incorrect setting of the controls.

The appliance is not intended to be operated by means of an external timer or separate remote control system.

Do not use the appliance outdoors.

This appliance is intended to be used in household and similar applications such as:
– staff kitchen areas in shops, offices and other working environments;
– farm houses and by clients in hotels, motels and other residential type environments;
– bed and breakfast type environments;
– catering and similar non-retail applications.

The bulb used inside the appliance is specifically designed for domestic appliances and is not suitable for general room lighting within the home (EC Regulation 244/2009).

INSTALLATION

Only activate the appliance when the installation procedure has been completed.

Installation and repairs must be carried out by a qualified technician, in compliance with the manufacturer's instructions and local safety regulations. Do not repair or replace any part of the appliance unless specifically stated in the user manual.

Use protective gloves to perform all unpacking and installation operations.

The appliance must be disconnected from the power supply before carrying out any installation operation.
After unpacking the appliance, make sure that it has not been damaged during transport. In the event of problems, contact the dealer or your nearest After-sales Service.

During installation, make sure the appliance does not damage the power cable.

The appliance must be handled and installed by two or more persons.

When installing the appliance make sure that the four feet are stable and resting on the floor, adjusting them as required, and check that the appliance is perfectly level using a spirit level.

Wait at least two hours before switching the appliance on, to ensure that the refrigerant circuit is fully efficient.

Make sure the appliance is not near a heat source.

ELECTRICAL WARNINGS

Make sure the voltage specified on the rating plate corresponds to that of your home.

The power supply ranges are indicated on the rating plate.
Regulation require that the appliance is earthed.
For installation to comply with current safety regulations, an omnipolar switch with minimum contact gap of 3mm is required.

If the power cable is damaged it must be replaced with an identical one. The power cable must only be replaced by a qualified technician in compliance with the manufacturer instruction and current safety regulations. Contact an authorized service center.

The electrical components must not be accessible to the user after installation.

The power cable must be long enough for connecting the appliance, once fitted in its housing, to the main power supply.
Do not use extension leads.

Do not pull the power supply cable.
Do not use multiple plug adaptors if the appliance is fitted with a plug.

For appliances with fitted plug, if the plug is not suitable for you socket outlet, contact a qualified technician.

Do not touch the appliance with any wet part of the body and do not operate it when barefoot.

Do not operate this appliance if it has a damaged mains cord or plug, if it is not working properly, or if it has been damaged or dropped. Do not immerse the mains cord or plug in water. Keep the cord away from hot surfaces.

When using a residual current circuit breaker (RCCB), only use a model marked with .

The appliance is arranged for operation in places where the temperature comes within the following ranges, according to the climatic class given on the rating plate.
The appliance may not work properly if it is left for a long time at a temperature outside the specified range.
Climatic Class Amb. T. (°C)
SN From 10 to 32
N From 16 to 32
ST From 16 to 38
T From 16 to 43

ELECTRICAL CONNECTION FOR GREAT BRITAIN AND IRELAND ONLY

Fuse replacement.
If the mains lead of this appliance is fitted with a BS 1363A 13amp fused plug, to change a fuse in this type of plug use an A.S.T.A. approved fuse to BS 1362 type and proceed as follows:

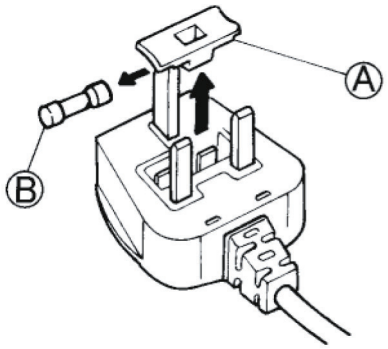

1. Remove the fuse cover (A) and fuse(B).
2. Fit replacement 13A fuse into fuse cover.
3. Refit both into plug.

Important:
The fuse cover must be refitted when changing a fuse and if the fuse cover is lost the plug must not be used until a correct replacement is fitted.
Correct replacement are identified by the colour insert or the colour embossed in words on the base of the plug.
Replacement fuse covers are available from your local electrical store.

For the Republic of Ireland only
The information given in respect of Great Britain will frequently apply, but a third type of plug and socket is also used, the 2-pin, side earth type.

Socket outlet / plug (valid for both countries)
If the fitted plug is not suitable for your socket outlet, please contact After-sales Service for further instruction. Please do not attempt to change plug yourself. This procedure needs to be carried out by a qualified technician in compliance with the manufactures instructions and current standard safety regulations.

CORRECT USE

Use the refrigerator compartment only for storing fresh food and the freezer compartment only for storing frozen food, freezing fresh food and making ice cubes.

Avoid storing unwrapped food in direct contact with internal surfaces of the refrigerator or freezer compartments.

Appliances could have special compartments for food storage.
In case not differently specified in the specific booklet of product, they can be removed, maintaining equivalent performances.
Do not swallow the contents (non-toxic) of the ice packs (in some models).

Do not eat ice cubes or ice lollies immediately after taking them out of the freezer since they may cause cold burns.

For products designed to use an air filter inside an accessible fan cover, the filter shall be always in position when the refrigerator is in function.
Do not store glass containers

with liquids in the freezer compartment since they may break.

Do not obstruct the fan (if available) with food items. After placing the food check if the door of compartments closes properly, especially the freezer door.

Damaged gasket must be replaced as soon as possible.

CHILDREN SAFETY

Very young (0-3 years) and young children (3-8 years) shall be kept away unless continuously supervised.

Childern from 8 years old and above and persons with reduced physical, sensory or mental capabilities or lack of experience and knowledge can use this appliance only if they are supervised or have been given instructions on safe appliance use and if they understand the hazards involved. Children shall not play with the appliance. Cleaning and user maintenance shall not be made by childern without supervision.

Keep the packaging materials (plastic bags, polystyrene parts, etc.) out of reach of children.

CLEANING AND MAINTENANCE

The appliance must be disconnected from the power supply before carrying out any cleaning or maintenance operation.

Never use steam cleaning equipment

SAFEGUARDING THE ENVIRONMENT

DISPOSAL OF PACKAGING MATERIALS

The packaging material is 100% recyclable and is marked with the recycle symbol:



The various parts of the packaging must therefore be disposed of responsibly and in full compliance with local authority regulations governing waste disposal.

SCRAPPING OF HOUSEHOLD APPLIANCES

This appliance is manufactured with recyclable or reusable materials. Dispose of it in accordance with local waste disposal regulations.

For further information on the treatment, recovery and recycling of household electrical appliances, contact your competent local authority, the collection service for household waste or the store where you purchase the appliance.

This appliance is marked in compliance with European Directive 2012/19/EU, Waste Electrical and Electronic Equipment (WEEE).
By ensuring this product is disposed of correctly, you will help prevent potential negative consequences for the environment and human health, which could otherwise be caused by inappropriate waste handling of this product.



This symbol on the product or on the accompanying documentation indicates that it should not be treated as

domestic waste but must be taken to an appropriate collection centre for the recycling of electrical and electronic equipment.

ENERGY SAVING TIPS

Install the appliance in a dry, well ventilated room far away from any heat source (e.g. radiator, cooker, etc.) and in a place not exposed directly to the sun. If required, use an insulating plate.
To guarantee adequate ventilation follow installation instructions. Insufficient ventilation on back of the product increases energy consumption and decreases cooling efficiency.

The internal temperatures of the appliance may be affected by the ambient temperature, frequency of door opening, as well as location of the appliance. Temperature setting should take into consideration these factors.
Reduce to a minimum door opening.

When thawing frozen food, place them in the refrigerator. The low temperature of the frozen products cools the food in the refrigerator.

Allow warm food and drinks to cool down before placing in the appliance.

Positioning of the shelves in the refrigerator has no impact on the efficient usage of energy. Food should be placed on the shelves in such way to ensure proper air circulation (food should not touch each other and distance between food and rear wall should be kept).

You can increase storage capacity of frozen food by removing baskets and, if present, Stop Frost shelve, maintaining an equivalent energy consumption.

High energy class products are fitted with high efficiency motors that remain operational for longer, but have a low power consumption. Do not worry if the engine continues to run for longer periods.

DECLARATION OF CONFORMITY

This appliance has been designed for preserving food and is manufactured in compliance with Regulation (CE) No . 1935/2004 .

This appliance has been designed, manufactured and marketed in compliance with:

› safety objectives of the “Low Voltage” Directive 2006/95/CE (which replaces 73/23/CEE and subsequent amendments);

› the protection requirements of Directive “EMC” 2004/108/EC.
Electrical safety of the appliance can only be guaranteed if it is correctly connected to an approved earthing system.

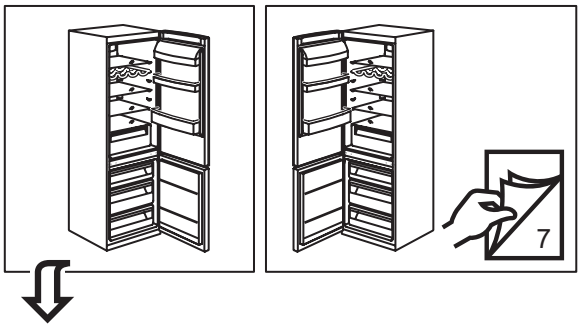
7

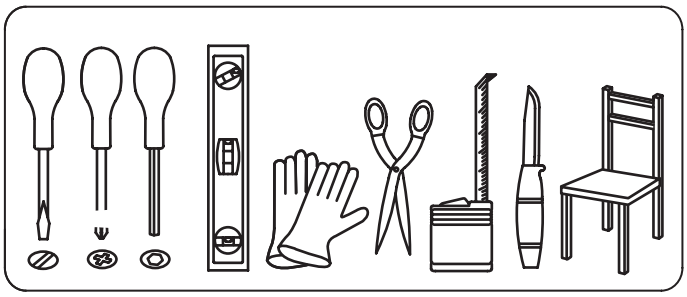

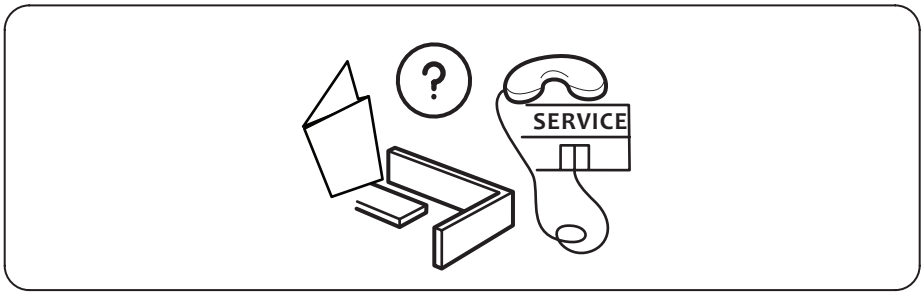
?
SERVICE

1.

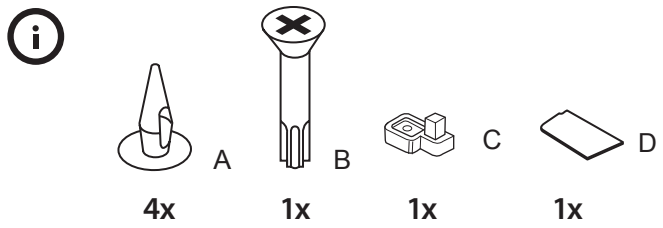

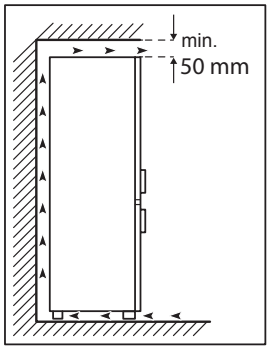

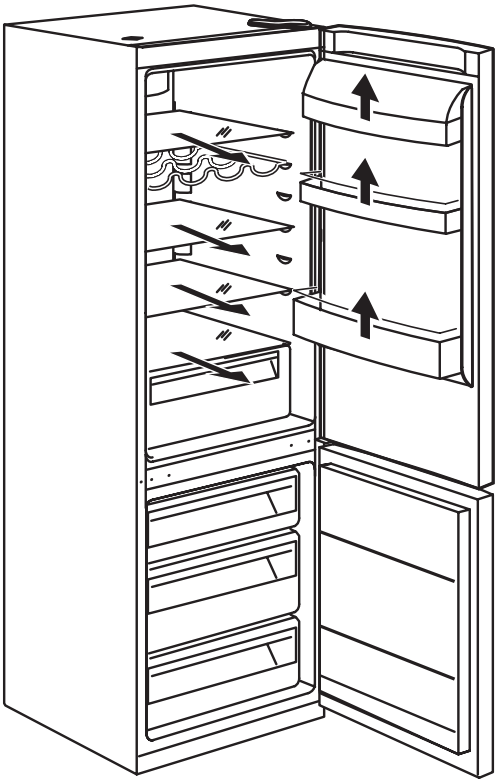

2.

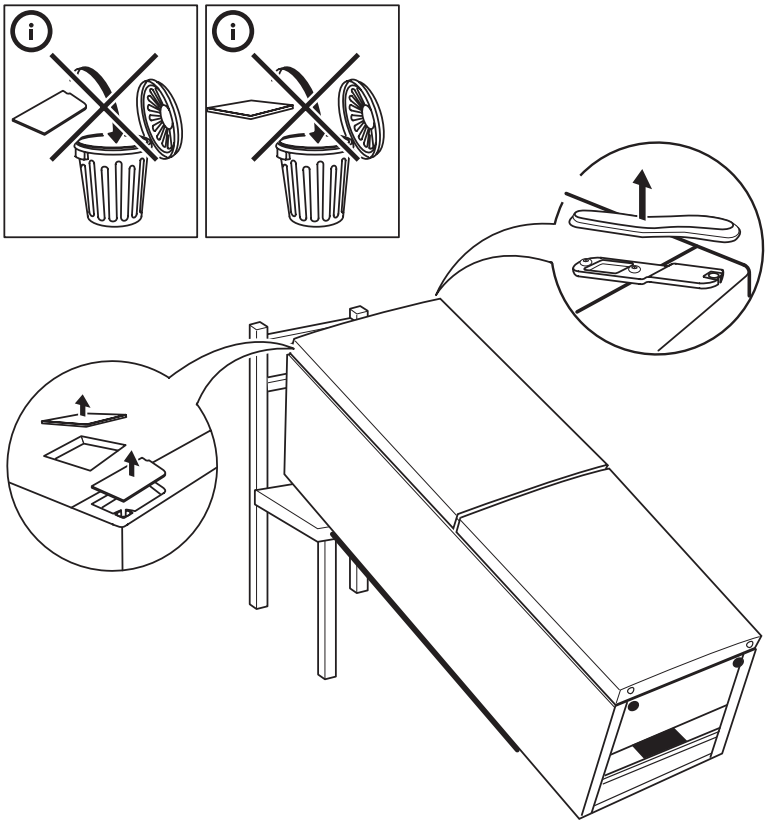

3.

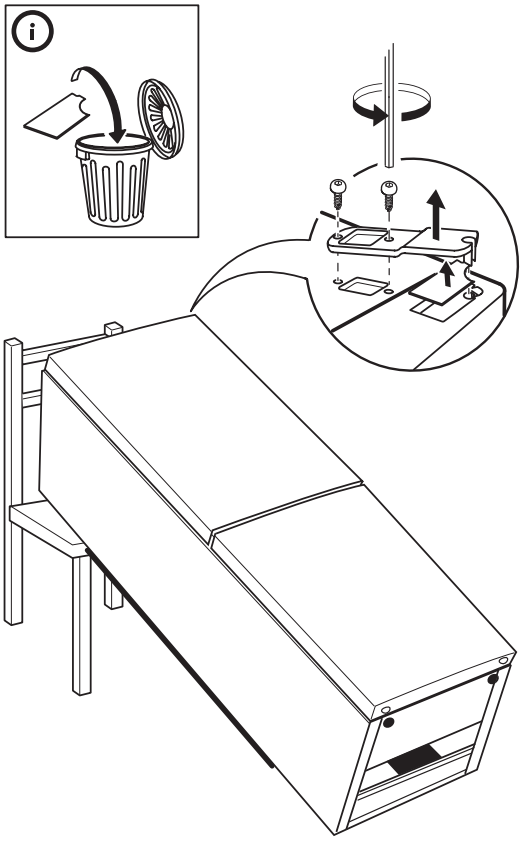

IGNIS

4.

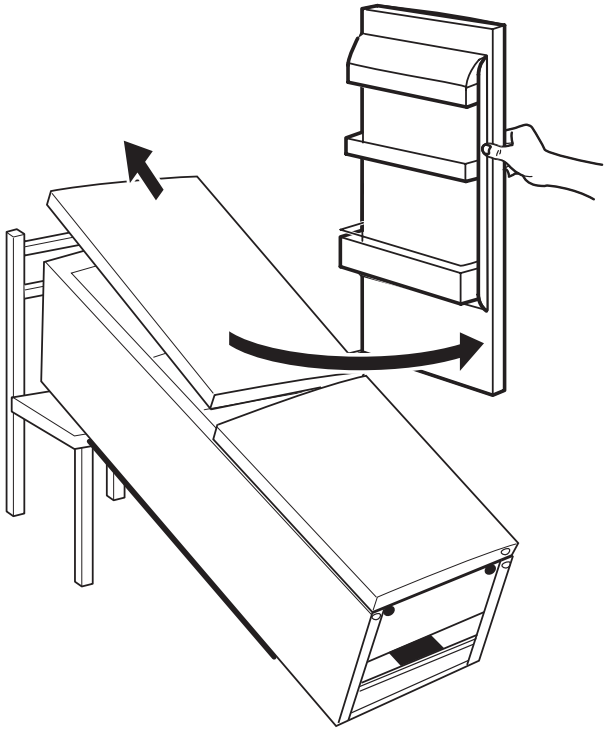

5.

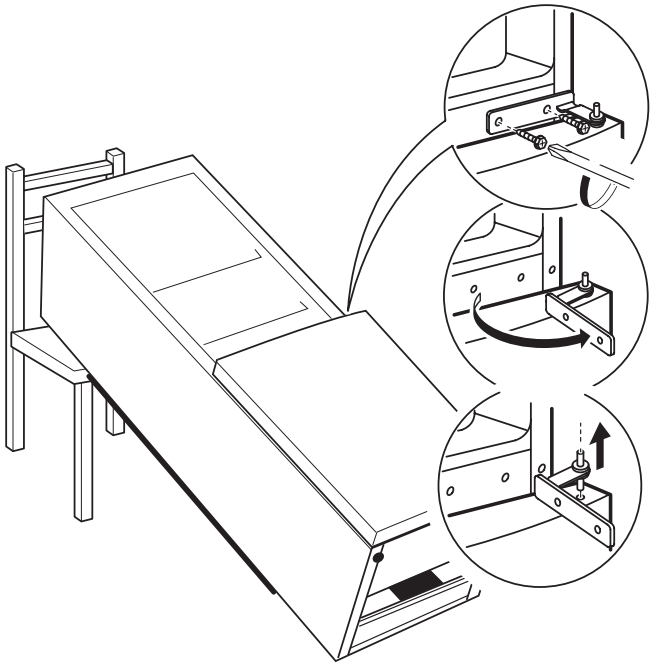

6.

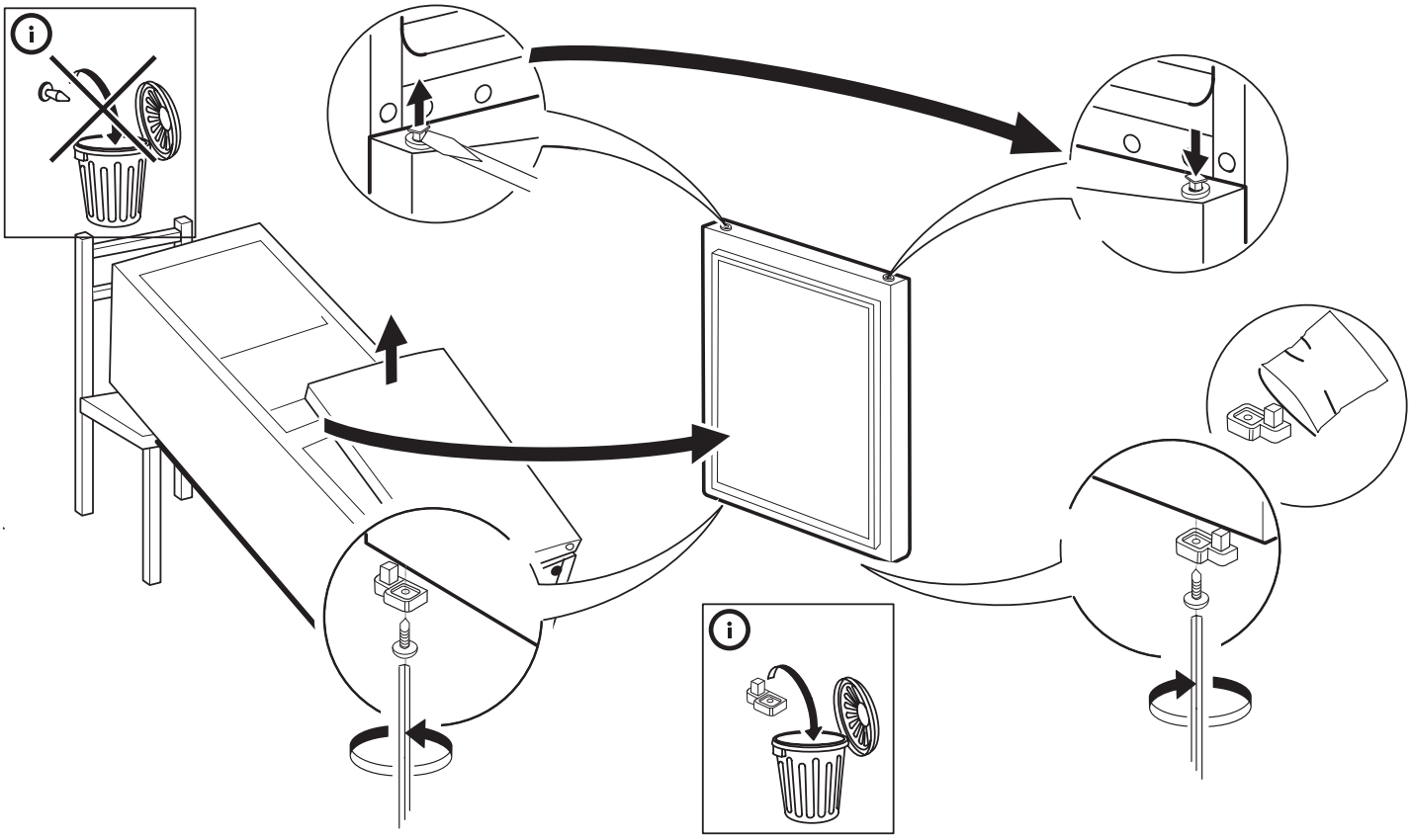

IGNIS

7.

8.

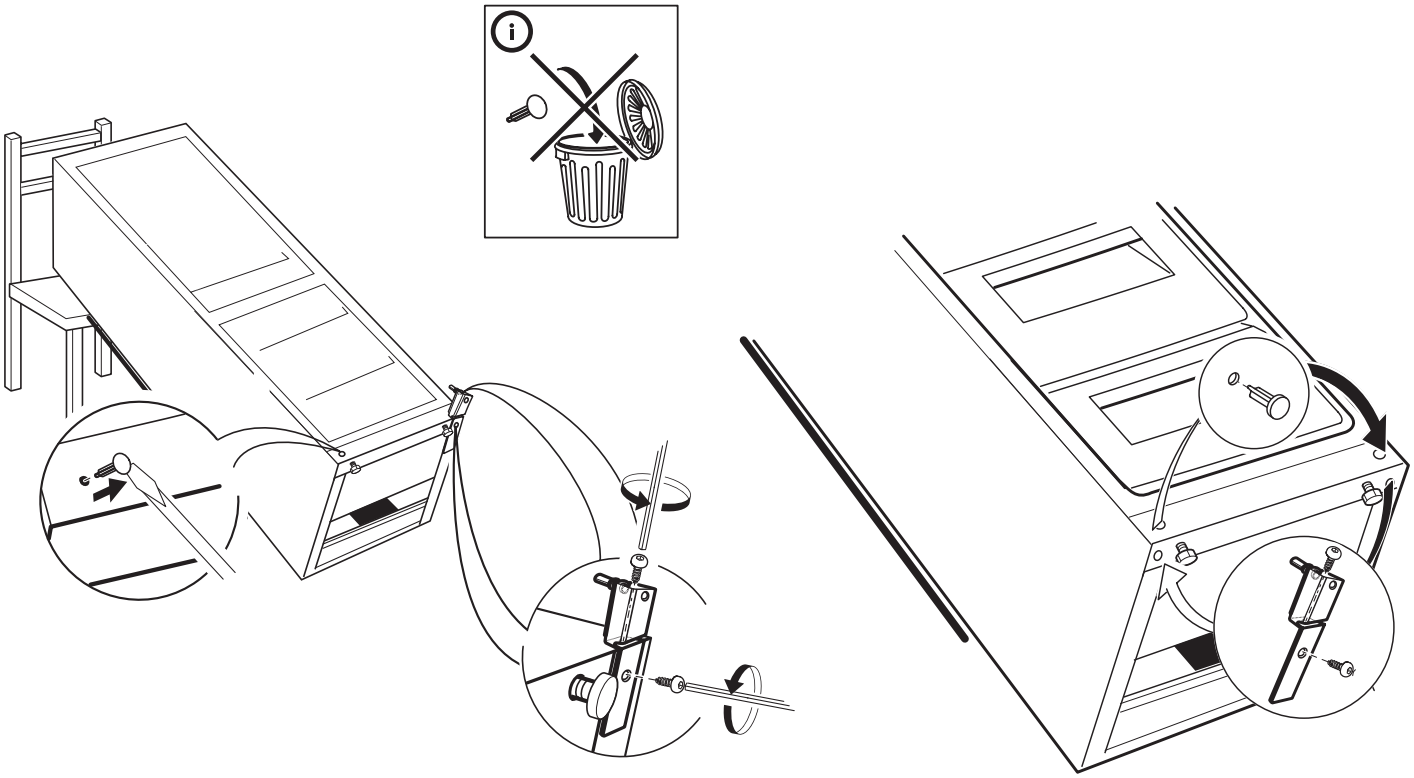

9.

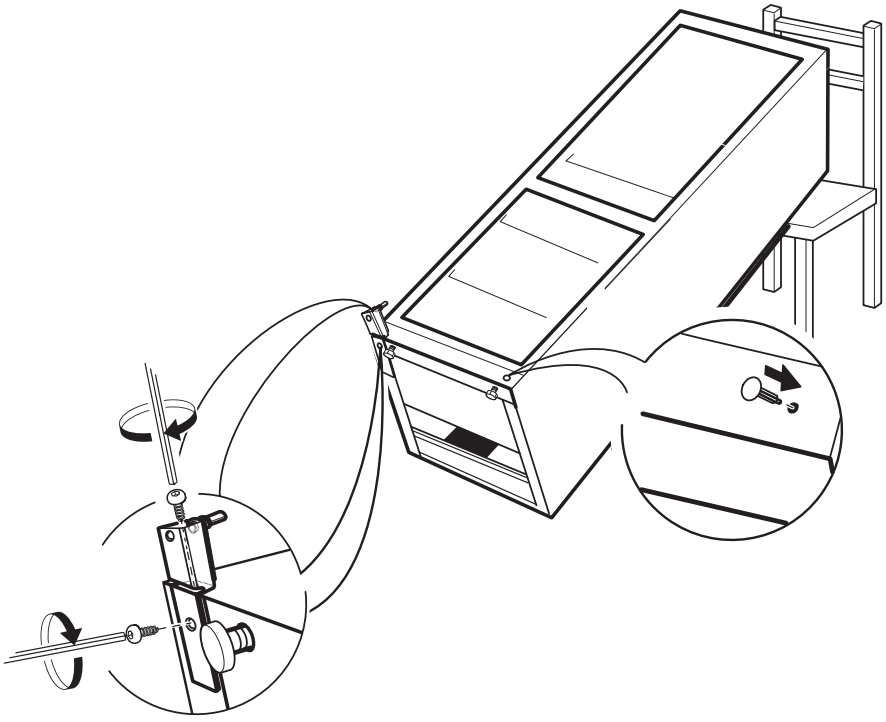

10.

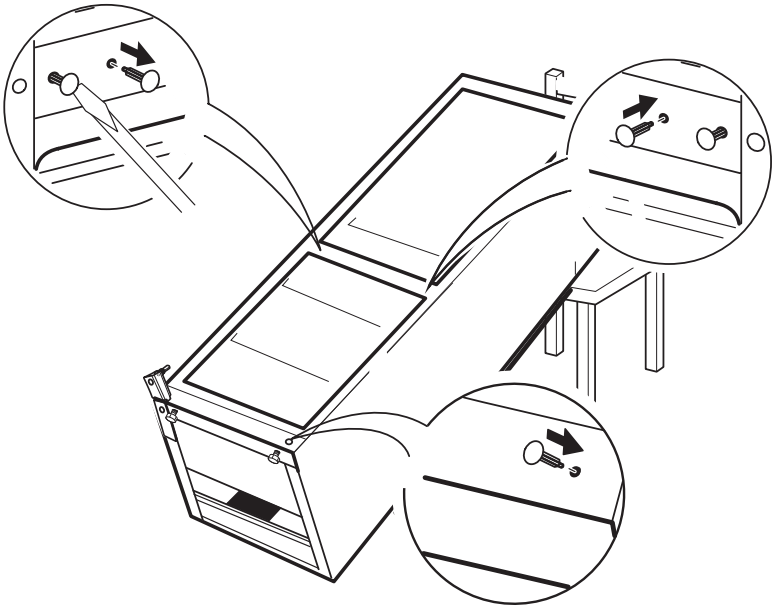

11.

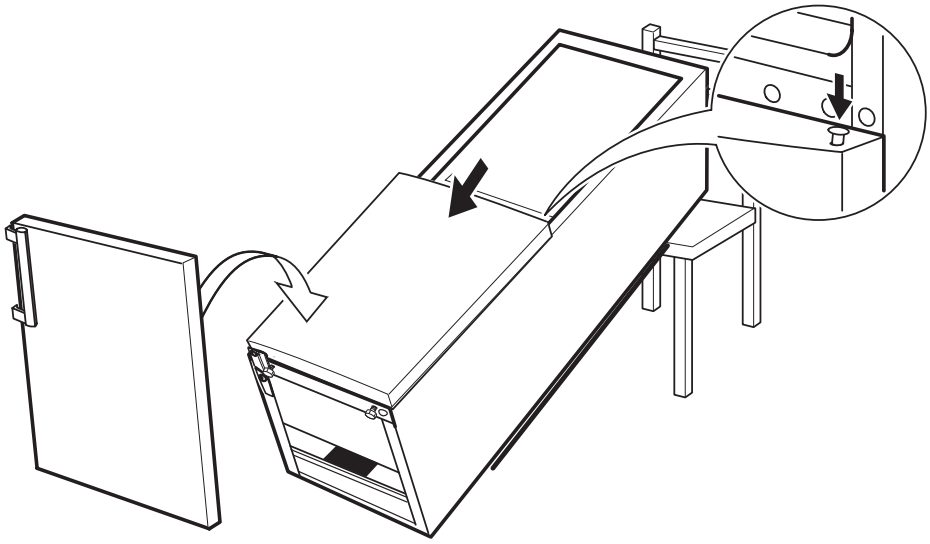

12.

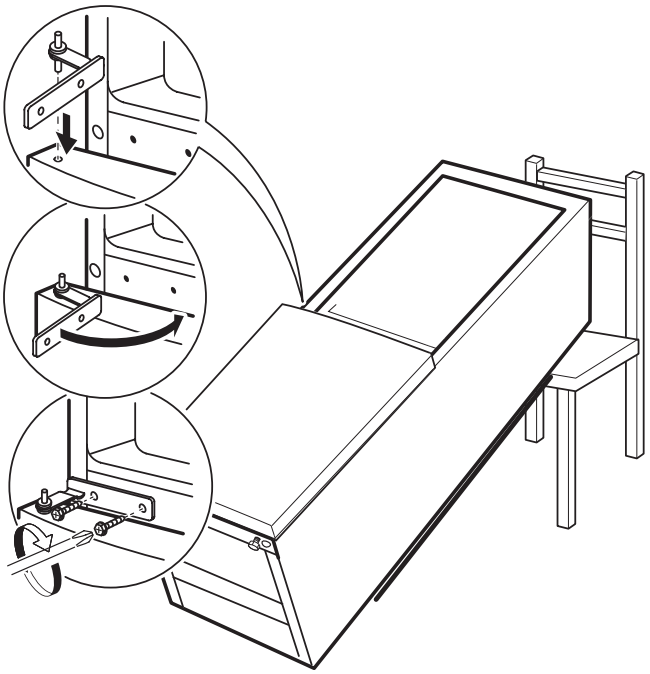

13.

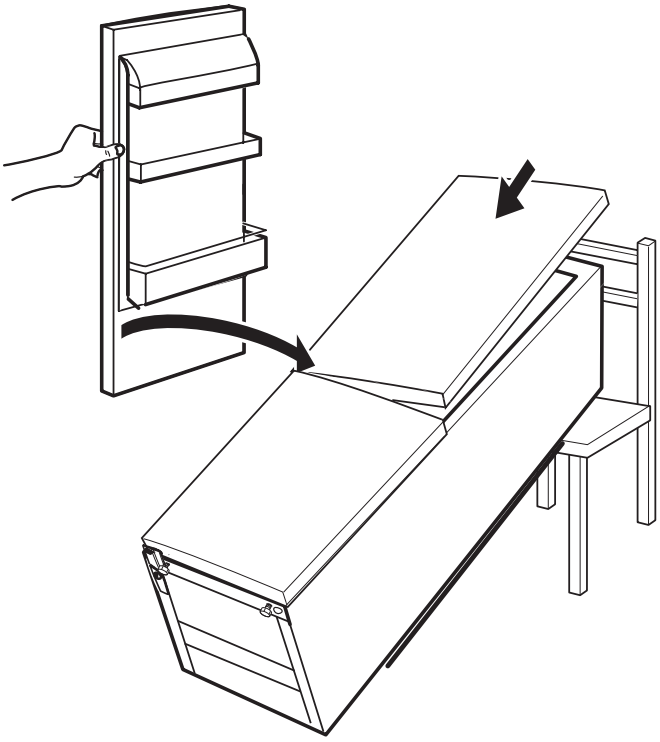

14.

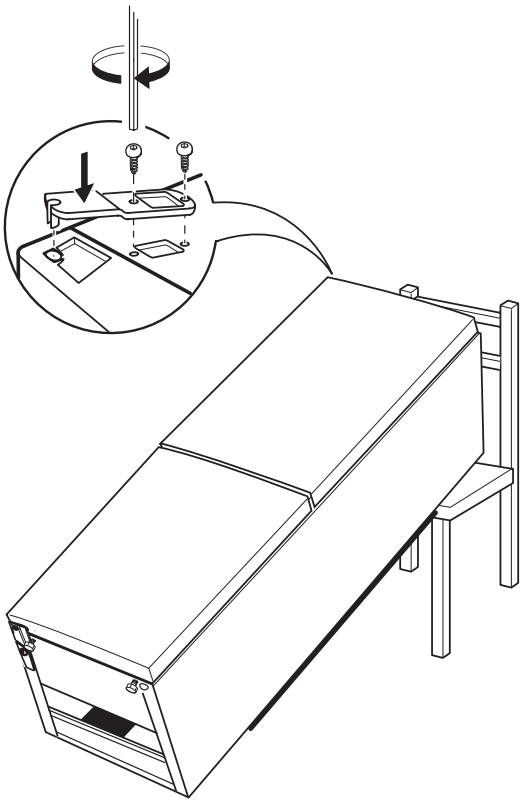

15.

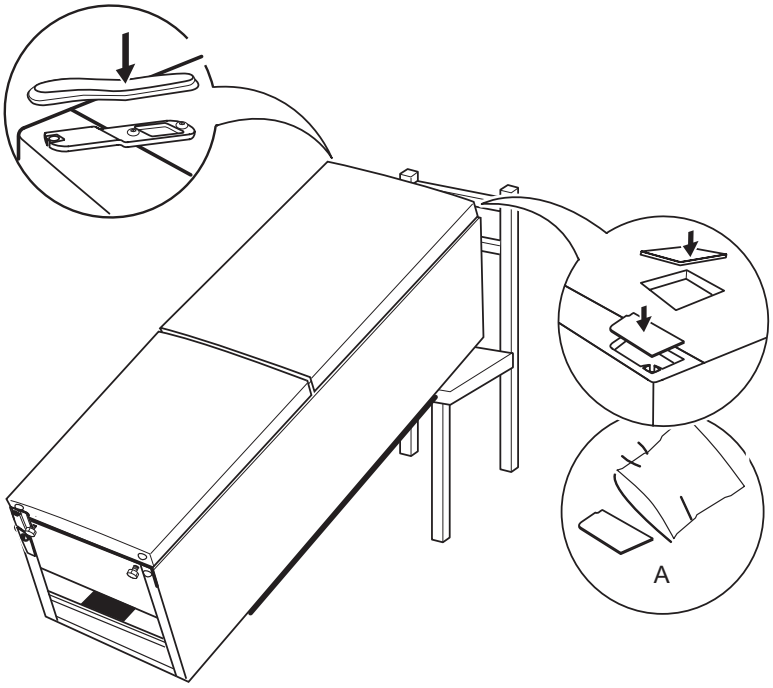

IGNIS

16.

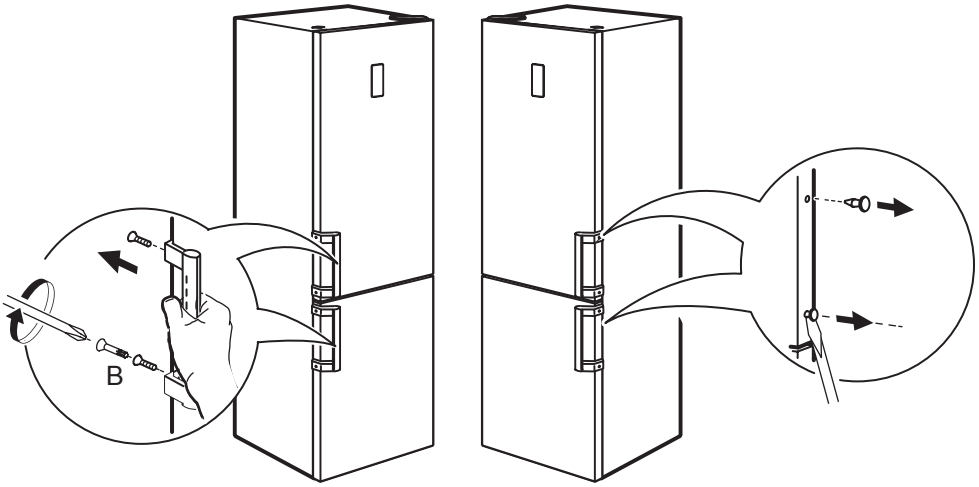

17.

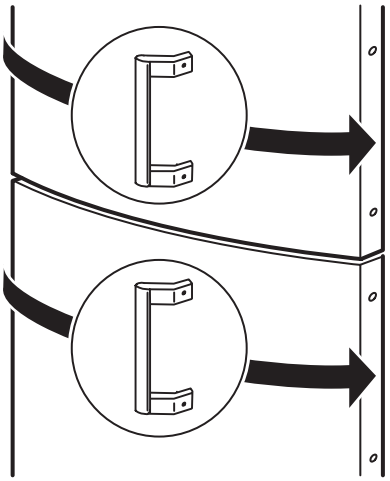

18.

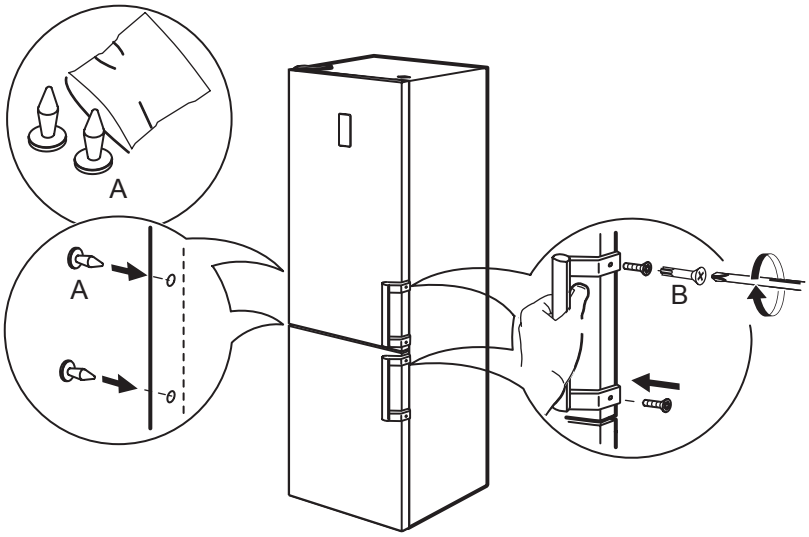

19.

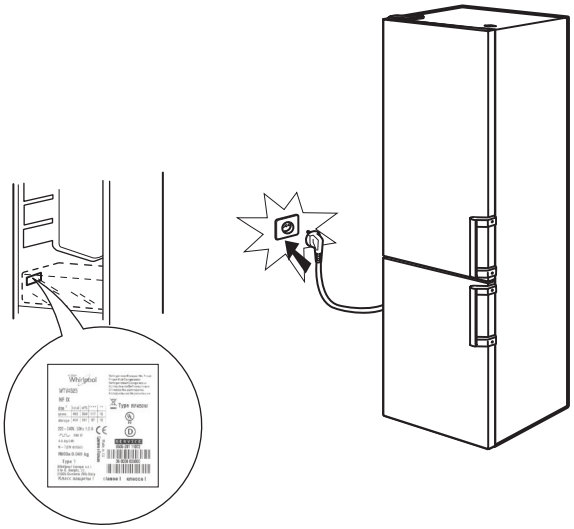

EN

400010788534

Whirlpool® Registered trademark/TM Trademark of Whirlpool group of companies -
© Copyright Whirlpool Europe s.r.l. 2014. All rights reserved - http://www.whirlpool.eu

IGNIS