

Halogen Low Voltage

6423/5H 150W GZ6.35 15V 1CT/10X5F

The long lifetime of most of the Halogen Low Voltage lamps is further extended by the unique P3 technology developed by Philips. This allows the lamp to be used at higher temperatures, thereby extending the lamp's lifetime, reducing early failures, and resulting in fewer maintenance man hour costs. P3 also ensures consistency of high-quality light output, and allows the lamp to be used in any burning position, which enables more compact fixture designs. In addition, the compact filament produces a clean white light and high beam intensity for true natural colors on stage and without any hotspots.

Product data

• General Information

Cap base	GZ6.35 [GZ6.35]
Philips code	6423/5H
ANSI Code	EFR-5H
Bulb shape	R50 [R 50mm]
Operating position	UNIVERSAL [Any or Universal (U)]
Main application	Disco/Theatre
Life to 50% failures (nom.)	500 h

• Light Technical

Luminous flux (rated) (nom.)	720 lm
Correlated colour temperature (nom.)	3400 K
Color rendering index (nom.)	100

• Operating and Electrical

Power (Rated) (Nom)	150 W
Voltage (Nom)	15 V

• Controls and Dimming

Dimmable	Yes

• Mechanical and Housing

Bulb material	Quartz-UV Open
Filament shape	-
Filament dimensions WxH	-

• Luminaire Design Requirements

Bulb temperature (max.)	900 °C
Pinch temperature (max.)	350 °C
Working distance WD	32 mm

• Product Data

Full product code	871150040953960
Order product name	6423/5H 150W GZ6.35 15V 1CT/ 10X5F
EAN/UPC – product	8711500409539
Order code	40953960
Numerator – quantity per pack	1
Numerator – packs per outer box	50
Material no. (12NC)	924059218504
Net weight (piece)	0.023 kg

PHILIPS

Dimensional drawing

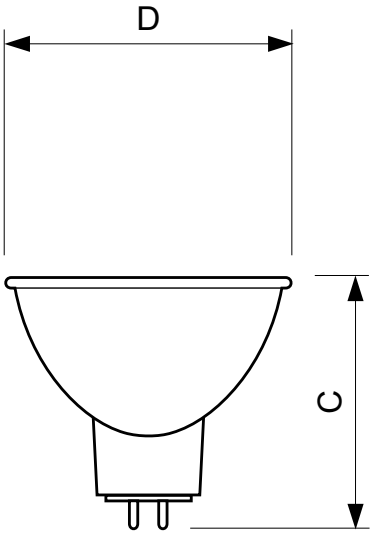

GX5.3, GY5.3, GZ6.35

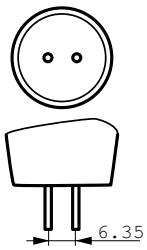

6423/5H 150W GZ6.35 15V

Product	D	C
6423/5H 150W GZ6.35 15V 1CT/10X5F	50 mm	42 mm

© 2016 Philips Lighting Holding B.V.
All rights reserved.

Specifications are subject to change without notice. Trademarks are the property of Koninklijke Philips N.V. (Royal Philips) or their respective owners.

www.philips.com/lighting

2016, October 10
data subject to change