LSTF 7B019 EU

12NC: F086868

GTIN (EAN) code: 8007842868685



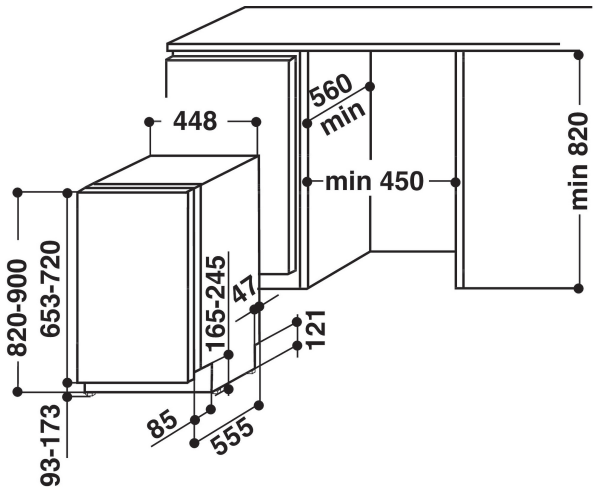

MAIN FEATURES

Construction type	Built-in
Installation type	Full-integrated
Type of control	Electronic
Type of control settings	Digit
Removable work top	No
Door decor panel	Possible but accessory
Main colour of product	Inox
Electrical connection rating (W)	1900
Current (A)	-
Voltage (V)	220-240
Frequency (Hz)	50
Length of Electrical Supply Cord (cm)	128
Plug type	Schuko
Length inlet hose (cm)	0
Length outlet hose (cm)	0
Adjustable plinth	Vertical
Height of removable worktop (mm)	0
Adjustable feet	Yes - all
Height of the product	820
Width of the product	445
Depth of the product	555
Depth with open door 90 degree (mm)	995
Minimum niche height	820
Maximum niche height	820
Minimum niche width	450
Maximum niche width	450
Niche depth	550
Net weight (kg)	29.6
Gross weight (kg)	31.6

TECHNICAL FEATURES

Automatic programmes	Yes
Maximum temperature for water intake (°C)	0
Start delay options	Continuous
Start delay time max. (h)	0
Progress indicator	-
Digital countdown indicator	No
Salt light indicator	Yes
Rinse aid light indicator	Yes
Safety device	-
Adjustable upper basket	Yes
Largest loadable dish upper basket (cm)	0
Largest loadable dish lower basket (cm)	0
Number of place settings	10

PERFORMANCES

Energy efficiency class - NEW (2010/30/EU)	A+
Energy consumption annual (kWh/annum) - NEW (2010/30/EU)	237
Duration of the left-on mode - NEW (2010/30/EU)	12
Power consumption in left-on mode - NEW (2010/30/EU)	5
Power consumption in off-mode - NEW (2010/30/EU)	0.5
Water consumption annual (l/annum) - NEW (2010/30/EU)	2800
Noise level (dB(A) re 1 pW)	49