DIFP 48T9 AL EU

12NC: F089556

GTIN (EAN) code: 8007842895568



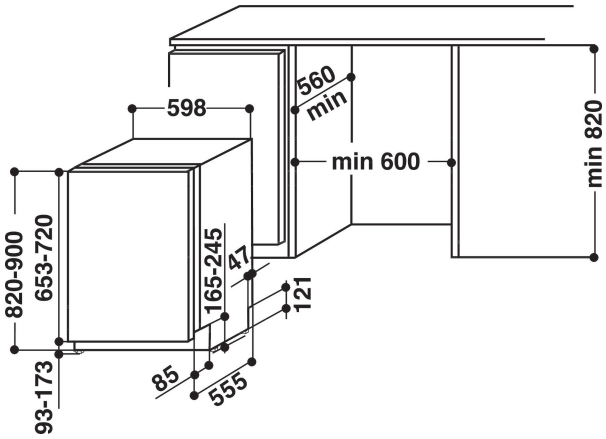

MAIN FEATURES

Construction type	Built-in
Installation type	Full-integrated
Type of control	Electronic
Type of control settings	Digit
Removable work top	No
Door decor panel	N/A
Main colour of product	White
Electrical connection rating (W)	1900
Current (A)	10
Voltage (V)	220-240
Frequency (Hz)	50
Length of Electrical Supply Cord (cm)	128
Plug type	Schuko
Length inlet hose (cm)	0
Length outlet hose (cm)	0
Adjustable plinth	No
Height of removable worktop (mm)	0
Adjustable feet	Yes - all
Height of the product	820
Width of the product	598
Depth of the product	555
Depth with open door 90 degree (mm)	1165
Minimum niche height	820
Maximum niche height	820
Minimum niche width	600
Maximum niche width	600
Niche depth	560
Net weight (kg)	35.5
Gross weight (kg)	37.5

TECHNICAL FEATURES

Automatic programmes	Yes
Maximum temperature for water intake (°C)	0
Start delay options	Continuous
Start delay time max. (h)	0
Progress indicator	Yes
Digital countdown indicator	No
Salt light indicator	Yes
Rinse aid light indicator	Yes
Safety device	-
Adjustable upper basket	Yes
Largest loadable dish upper basket (cm)	0
Largest loadable dish lower basket (cm)	0
Number of place settings	14

PERFORMANCES

Energy efficiency class - NEW (2010/30/EU)	A++
Energy consumption annual (kWh/annum) - NEW (2010/30/EU)	266
Duration of the left-on mode - NEW (2010/30/EU)	12
Power consumption in left-on mode - NEW (2010/30/EU)	6
Power consumption in off-mode - NEW (2010/30/EU)	0.5
Water consumption annual (l/annum) - NEW (2010/30/EU)	2660
Noise level (dB(A) re 1 pW)	43