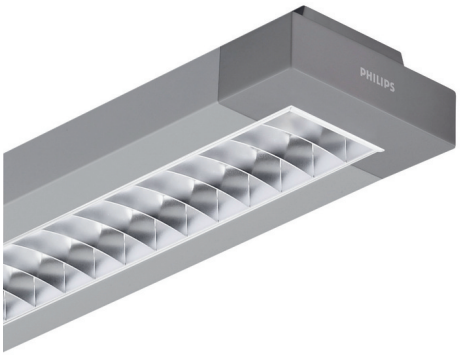

EFix TCS260

TCS260 2x35-80W HFPI D6 SI

EFix surface mounted - 2 pcs - 35, 49 or 80 W - HF Performer Intelligent - Semi-high-gloss optic double parabolic

The EFix TL5 luminaire range is a dedicated, affordable choice of innovative lighting that enables massive energy savings to be made when old electromagnetic installations are replaced by the latest Philips technology. The range's optical performance complies with the latest EN-12464 norms, ensuring improved lighting quality in every application.Used in combination with high-frequency gear, Philips MASTER TL5 lamps enable substantial energy savings to be made. These savings can be further increased by using a Luxsense daylight controller integrated into the luminaire.The practical design of EFix combines both surface-mounted (TCS260) and suspended (TPS262) luminaires in one design. Thanks to the luminaire's easily removable top cover, the beam can be adjusted to provide direct or direct/indirect lighting. EFix is supplied with lamps and is ready to install, minimizing installation time. EFix recessed TBS260 completes Philips' range of luminaires for general lighting applications in offices and shops.

Product data

General Information	
Number of light sources	2 pcs
Lamp family code	TL5 [TL5]
Lamp power	35, 49 or 80 W
Kombipack	-
Gear	HFPi [HF Performer Intelligent]
Optic type	Semi-high-gloss optic double parabolic
Optical cover/lens type	-
Emergency lighting	-
Embedded control	-

Internal wiring	Standard
Protection class IEC	Safety class I
Flammability mark	For mounting on normally flammable surfaces
CE mark	CE mark
Product family code	TCS260 [EFix surface mounted]

Light Technical	
Light Distribution	Direct lighting

EFix TCS260

Operating and Electrical	
Input Voltage	220 to 240 V

Mechanical and Housing	
Housing configuration	Basic version
Fixation point length distance (Nom)	1300 mm
Overall length	1541 mm

Approval and Application	
Ingress protection code	IP20 [Finger-protected]

Product Data	
Full product code	872790061109000

Order product name	TCS260 2x35-80W HFPI D6 SI
EAN/UPC - Product	8727900611090
Order code	910402463212
Numerator - Quantity Per Pack	1
Numerator - Packs per outer box	1
Material Nr. (12NC)	910402463212
Net Weight (Piece)	4.200 kg

Dimensional drawing

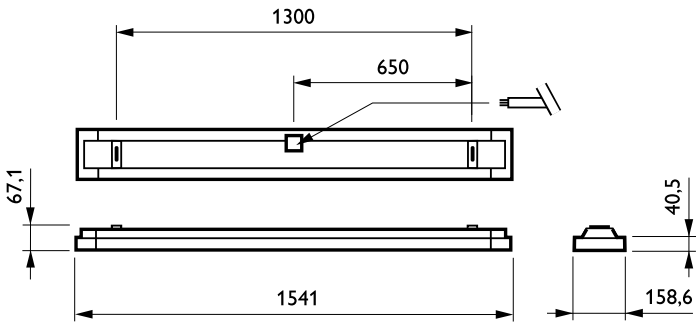

EFix TCS260

© 2016 Philips Lighting Holding B.V. All rights reserved. Philips Lighting reserves the right to make changes in specifications and/or to discontinue any product at any timewithout notice or obligation and will not be liable for any consequences resulting from the use of this publication.