

MASTERLine ES

MASTERLine ES 35W GU5.3 12V 8D 1CT/4X5F

MASTER dichroic coated low-voltage halogen reflector lamp with EcoBoost technologyMost energy-efficient dichroic lamp on the market

PHILIPS

Product data

• General Information

Cap base	GU5.3 [GU5.3]
Philips code	18138
Bulb shape	MR16 [2inch/50mm]
Operating position	UNIVERSAL [Any/Universal]
ANSI code halogen	na [not applicable]
Nominal lifetime (nom.)	5000 h

• Light Technical

Beam Angle (Nom)	8 °
Luminous flux (rated) (nom.)	575 lm
Luminous intensity (max.)	12500 cd
Rated beam angle	8 °
Correlated colour temperature (nom.)	3000 K
Color rendering index (nom.)	100
LLMF at end of nominal lifetime (min.)	80 %
Luminous Flux In 90° Cone (Rated)	575 lm

• Operating and Electrical

Power (Rated) (Nom)	35.0 W
Lamp current (nom.)	2.92 A
Wattage equivalent	52 W
Starting time (nom.)	0.0 s
Warm-up time to 60% light (nom.)	instant full light
Power factor (nom.)	1
Voltage (Nom)	12 V

• Controls and Dimming

Dimmable	yes

• Approval and Application

Energy efficiency label (EEL)	B
Energy Consumption kWh/1000 h	37 kWh

• Luminaire Design Requirements

Bulb temperature (max.)	380 °C
Cap base temperature (max.)	380 °C

• Product Data

Full product code	871150041387171
Order product name	MASTERLine ES 35W GU5.3 12V 8D 1CT/4X5F
EAN/UPC – product	8711500413871
Order code	41387171
Local Code	18138
Numerator – quantity per pack	1
Numerator – packs per outer box	20
Material no. (12NC)	924895517101
Net weight (piece)	30.000 g
ILCOS Code	HRGS-35-12-GU5.3-50/8

Dimensional drawing

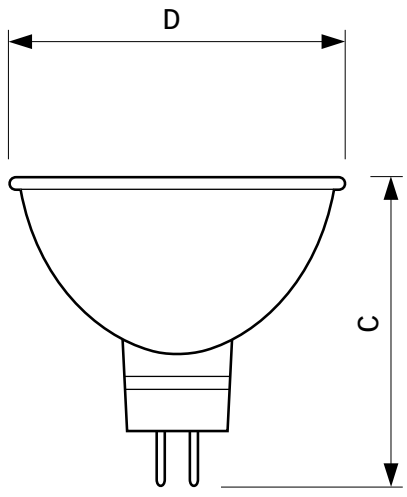

GU5.3, MR16

MLES 18138 35W GU5.3 12V MR16 8D

Product	D	C1
MASTERLine ES 35W GU5.3 12V 8D 1CT/4X5F	51 mm	50.5 mm

Dimensional drawing

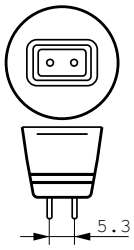

Photometric data

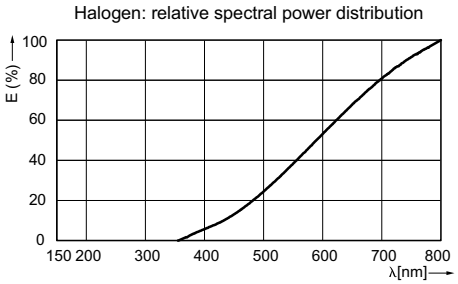

© 2016 Philips Lighting Holding B.V.
All rights reserved.

Specifications are subject to change without notice. Trademarks are the property of Koninklijke Philips N.V. (Royal Philips) or their respective owners.

www.philips.com/lighting

2016, October 11
data subject to change