

Brilliantline Dichroic

Brilliantline Dichroic 50W GU5.3 12V MR16 24D 1CT/10X5F

Superior-quality low-voltage halogen burner in glass reflector. Ideal solution for small decorative luminaires, putting your objects in the spotlight. Dichroic coating prevents heat transmission onto the object.

PHILIPS

Brilliantline Dichroic

Product data

• General Information

Cap base	GU5.3 [GU5.3]
Philips code	14619
Bulb shape	MR16 [2inch/50mm]
Operating position	UNIVERSAL [Any or Universal (U)]
ANSI code halogen	EXZ
Nominal lifetime (nom.)	4000 h

• Light Technical

Beam Angle (Nom)	24 °
Luminous flux (rated) (nom.)	775 lm
Luminous intensity (max.)	3700 cd
Rated beam angle	24 °
Correlated colour temperature (nom.)	3000 K
Color rendering index (nom.)	100
LLMF at end of nominal lifetime (min.)	80 %
Luminous Flux In 90° Cone (Rated)	775 lm

• Operating and Electrical

Power (Rated) (Nom)	50.0 W
Lamp current (nom.)	4.2 A
Starting time (nom.)	0.0 s
Warm-up time to 60% light (nom.)	instant full light
Power factor (nom.)	1
Voltage (Nom)	12 V

• Controls and Dimming

Dimmable	Yes

• Mechanical and Housing

Bulb finish	Clear (CL)

• Approval and Application

Energy efficiency label (EEL)	B
Energy Consumption kWh/1000 h	53 kWh

• Luminaire Design Requirements

Bulb temperature (max.)	250 °C
Cap base temperature (max.)	350 °C

• Product Data

Full product code	871150042513360
Order product name	Brilliantline Dichroic 50W GU5.3 12V 24D 1CT/10X5F
EAN/UPC – product	8711500425133
Order code	42513360
Numerator – quantity per pack	1
Numerator – packs per outer box	50
Material no. (12NC)	924050917101
Net weight (piece)	30.000 g
ILCOS Code	HRGS-50-12-GU5.3-50/24

Dimensional drawing

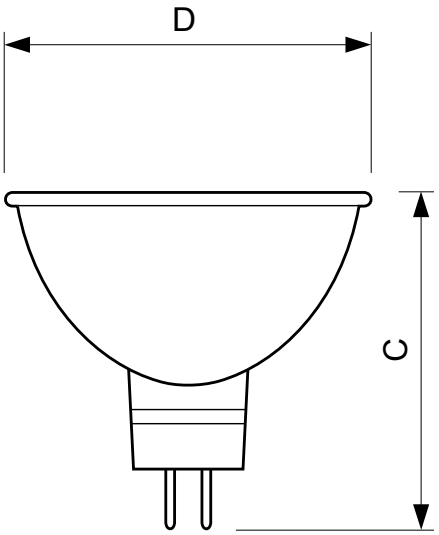

DICHRO Pro 14619 50W GU5.3 12V MR16 24D

Product	D	C
Brilliantline Dichroic 50W GU5.3 12V 24D 1CT/10X5F	51 mm	46 mm

Brilliantline Dichroic

Dimensional drawing

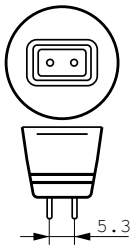

Photometric data

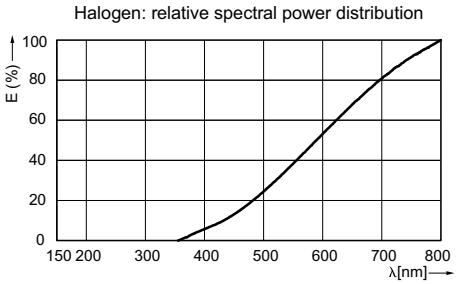

© 2016 Philips Lighting Holding B.V.
All rights reserved.

Specifications are subject to change without notice. Trademarks are the property of Koninklijke Philips N.V. (Royal Philips) or their respective owners.

www.philips.com/lighting

2016, October 10
data subject to change