

MASTERLine ES

MASTERLine ES 45W GU5.3 12V 24D 1CT/4X5F

MASTER dichroic coated low-voltage halogen reflector lamp with EcoBoost technologyMost energy-efficient dichroic lamp on the market

PHILIPS

Product data

• General Information

Cap base	GU5.3 [GU5.3]
Philips code	18143
Bulb shape	MR16 [2inch/50mm]
Operating position	UNIVERSAL [Any/Universal]
Nominal lifetime (nom.)	5000 h

• Light Technical

Beam Angle (Nom)	24 °
Luminous flux (rated) (nom.)	830 lm
Luminous intensity (max.)	5300 cd
Rated beam angle	24 °
Correlated colour temperature (nom.)	3000 K
Color rendering index (nom.)	100
LLMF at end of nominal lifetime (min.)	80 %
Luminous Flux In 90° Cone (Rated)	830 lm

• Operating and Electrical

Power (Rated) (Nom)	45.0 W
Lamp current (nom.)	3.75 A
Wattage equivalent	68 W
Starting time (nom.)	0.0 s
Warm-up time to 60% light (nom.)	instant full light
Power factor (nom.)	1
Voltage (Nom)	12 V

• Controls and Dimming

Dimmable	yes

• Approval and Application

Energy efficiency label (EEL)	B
Energy Consumption kWh/1000 h	48 kWh

• Luminaire Design Requirements

Bulb temperature (max.)	410 °C
Cap base temperature (max.)	410 °C

• Product Data

Full product code	871150042441971
Order product name	MASTERLine ES 45W GU5.3 12V 24D 1CT/4X5F
EAN/UPC – product	8711500424419
Order code	42441971
Local Code	18143
Numerator – quantity per pack	1
Numerator – packs per outer box	20
Material no. (12NC)	924896017101
Net weight (piece)	42.700 g
ILCOS Code	HRGS-45-12-GU5.3-50/24

Dimensional drawing

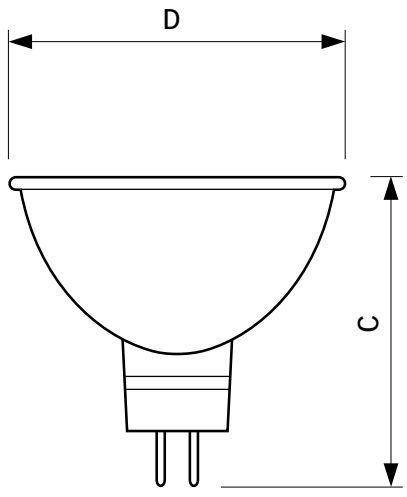

GU5.3, MR16

MLES 18143 45W GU5.3 12V MR16 24D

Product	D	C1
MASTERLine ES 45W GU5.3 12V 24D 1CT/4X5F	51 mm	50.5 mm

Dimensional drawing

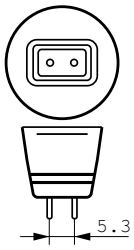

Photometric data

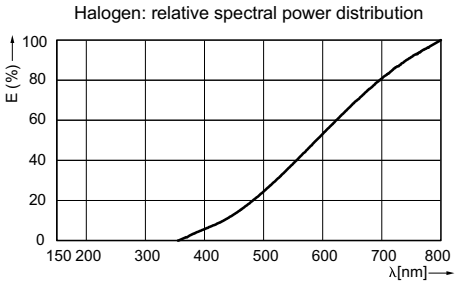

© 2016 Philips Lighting Holding B.V.
All rights reserved.

Specifications are subject to change without notice. Trademarks are the property of Koninklijke Philips N.V. (Royal Philips) or their respective owners.

www.philips.com/lighting

2016, October 10
data subject to change