

Halogen reflector

13186 90W GX5.3 14.5V 1CT/10X5F

Philips' halogen reflector lamps offer the ideal no-fuss solution for a wide variety of medical, projection and scientific illumination systems. Their proven reliability makes them ideal for retrofit installations. The burners are precisely aligned for optimal light performance. Dichroic reflectors ensure heat dissipation towards the back of the optical system, which helps the optical system remain within temperature limits. A special blue-filter version blocking out unwanted light above 700 nm is available for dental curing applications. In addition, you get all the proven advantages of halogen technology such as a CRI of 100 – the same as natural sunlight for the best possible color rendering. Halogen lamps also create a comfortable warm white light, and they maintain their high lumen output with almost no lumen reduction throughout their lifetime.

PHILIPS

Halogen reflector

Product data

• General Information

Cap base	GX5.3 [GX5.3]
Philips code	13186
ANSI Code	EPX-EPV
Bulb shape	R50 [R 50mm]
Operating position	S105 [s105]
Main application	Projection
Life to 50% failures (nom.)	500 h
J code	-

• Light Technical

Correlated colour temperature (nom.)	3200 K
Color rendering index (nom.)	100

• Operating and Electrical

Power (Rated) (Nom)	90 W
Voltage (Nom)	14.5 V

• Controls and Dimming

Dimmable	Yes

• Mechanical and Housing

Cap base information	na [-]
Bulb material	Quartz-UV Open
Filament shape	-
Filament dimensions WxH	-

• Luminaire Design Requirements

Bulb temperature (max.)	900 °C
Pinch temperature (max.)	350 °C
Working distance WD	155 mm

• Product Data

Full product code	871150040980560
Order product name	13186 90W GX5.3 14.5V 1CT/10X5F
EAN/UPC – product	8711500409805
Order code	40980560
Numerator – quantity per pack	1
Numerator – packs per outer box	50
Material no. (12NC)	923891214904
Net weight (piece)	0.026 kg

Dimensional drawing

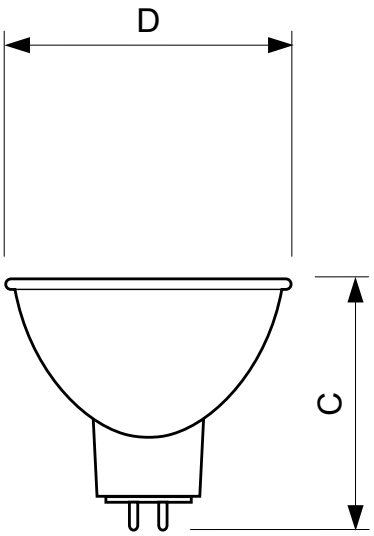

GX5.3, GY5.3, GZ6.35

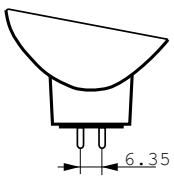

13186 90W GX5.3 14.5V

Product	D	C
13186 90W GX5.3 14.5V 1CT/10X5F	50 mm	45 mm

© 2016 Philips Lighting Holding B.V.
All rights reserved.

Specifications are subject to change without notice. Trademarks are the property of Koninklijke Philips N.V. (Royal Philips) or their respective owners.

www.philips.com/lighting

2016, October 11
data subject to change