DATASHEET - V-M16



Cable gland, M16, RAL 7035, IP68_x

Part no.	**V-M16**
Catalog No.	**215077**
EL-Nummer (Norway)	**0001706003**

Powering Business Worldwide

Delivery program

Product range		General switchboard accessories
Accessories		Cable management
Cable entry		M16
Hole diameter	mm	16,5
Outer cable diameter	mm	4.5 - 10
Example of application: NYM/NYY cable, 4-core	mm^2	H05VV-F3 x 1.5, NYM 1 x 16/3 x 1.5
Description		Flammability classification V2 according to UL94 With lock nut and built-in strain relief
Material		Polyamide Halogen free
Surface finish		RAL 7035
Information about equipment supplied		With lock nut and built-in strain relief
Degree of Protection		IP68 up to 5 bar (30 min)

Technical data

General

Degree of Protection		IP68 up to 5 bar (30 min)

Material characteristics

Material		Polyamide Halogen free
Colour		Gray, RAL 7035
Temperature resistant		-20 °C - 100 °C, short-time up to approx. 120 °C
Chemical resistant		Resistant against : Acetone, petrol, paraffin, diesel, grease, oil, solvent for paints and varnishes
Danger of stress fracture		low
Flame retardant		Glow wire test 750 °C according to EN 60695-2-11
Flammability classification according to UL94		V2

Dimensions

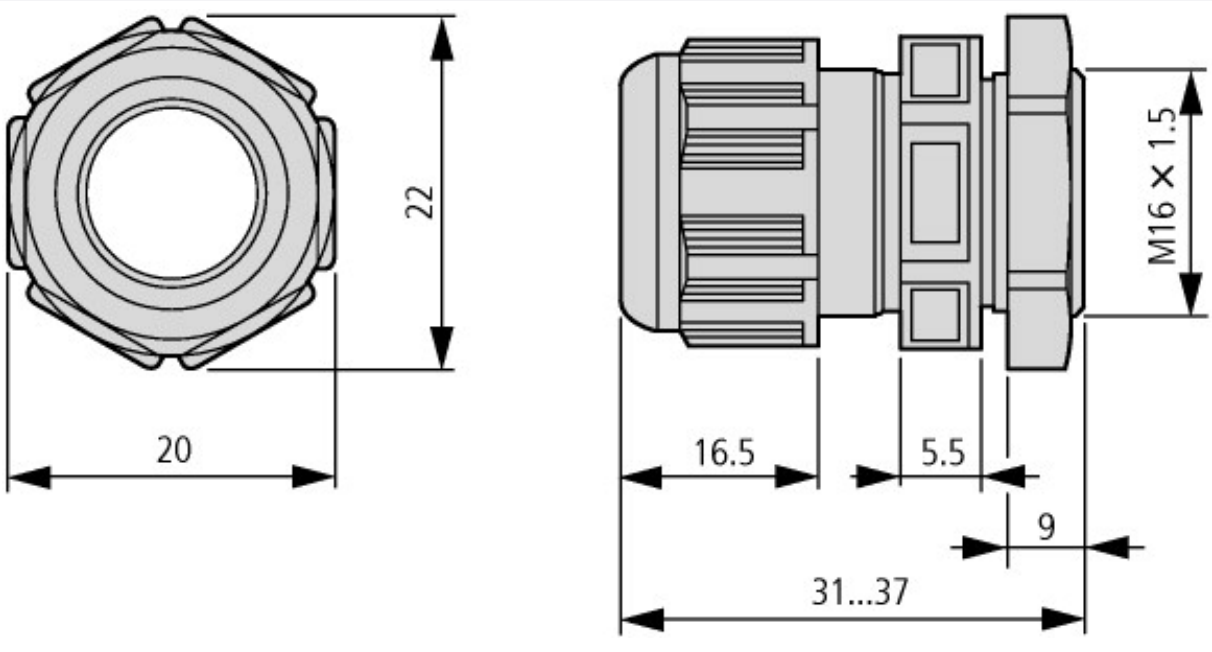

Eaton Industries GmbH
http://www.eaton.eu
© 12/2018 by Eaton Industries GmbH