DATASHEET - KT-M16



Diaphragm grommet, M16

Part no. KT-M16
Catalog No. 216983

EL-Nummer (Norway) 0002465276

Delivery program

Product range			General switchboard accessories
Accessories			Cable management
Accessories			Cable grommets Metric diaphragm grommets
Degree of Protection			up to IP66
Description			With integral push-through diaphragm
Material			PE and thermoplastic elastomer Halogen free
Surface finish			RAL 7035
Cable entry			M16
Hole diameter		mm	16,5
Outer cable diameter		mm	1 - 9
Example of application: NYM/NYY cable, 4-core		mm^2	H03VV-F3 x 0.75, NYM 1 x 16/3 x 1.5

Technical data

General

Degree of Protection			up to IP66

Material characteristics

Material			PE and thermoplastic elastomer Halogen free
Colour			Gray, RAL 7035
Temperature resistant			-40 °C - 80 °C, short-time up to approx. 100 °C
Chemical resistant			Resistant against: Alcohol, animal and plant fat, brine, light acids, water
Danger of stress fracture			Relative high

Dimensions

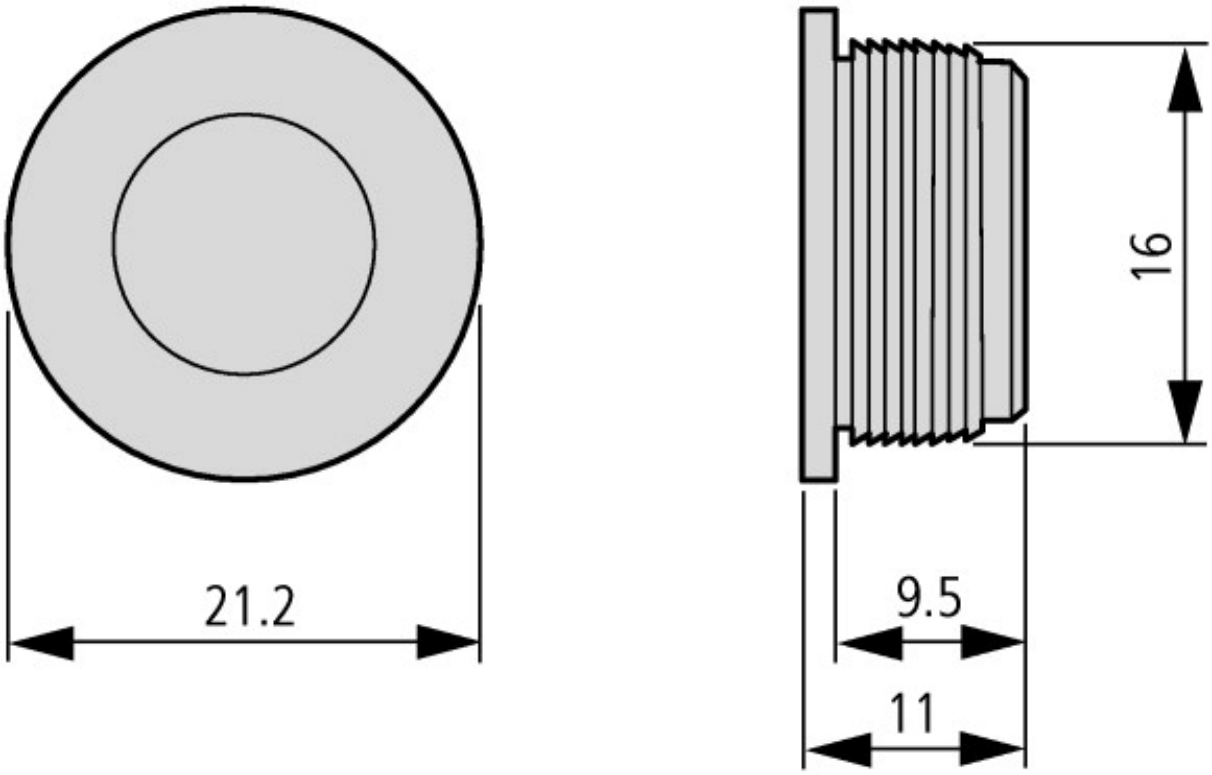

© 12/2018 by Eaton Industries GmbH