PHILIPS

Lighting



Lineco TMS022

TMS022 1xTL-D58W HFS

TMS022 - 1 pc - MASTER TL-D - 58 W - HF Standard

Lineco TMS022 is a functional and economical surface-mounted batten for 1 or 2 TL-D fluorescent lamps. It offers a choice of two optics, for symmetrical and asymmetrical lighting. Installation is quick and tool-less and can be carried out single-handedly. The repositionable contact block enables flexible connection (with cable entry centrally or via the end caps). A wide range of snap-on attachments is available.

Product data

General Information	
Number of light sources	1 [1 pc]
Lamp family code	TL-D [MASTER TL-D]
Lamp power	58 W
Kombipack	-
Compensation circuit	-
Gear	HF Standard
Optic type	No [-]
Emergency lighting	No [-]
Protection class IEC	Safety class I (I)
Ready-to-install	-
Glow-wire test	650/5 [Temperature 650 °C, duration 5 s]
Flammability mark	F [For mounting on normally flammable surfaces]
Country version	NO [Norway]
CE mark	CE mark
ENEC mark	ENEC mark
Product Family Code	TMS022 [TMS022]

Operating and Electrical	
Input voltage	230 to 240 V

Mechanical and Housing	
Housing configuration	No [-]
Fixation point length distance (nom.)	900 mm
Overall length	1525 mm

Approval and Application	
Ingress protection code	IP20 [Finger-protected]
Mech. impact protection code	IK02 [0.2 J standard]

Product Data	
Full product code	871155913558899
Order product name	TMS022 1xTL-D58W HFS
EAN/UPC – product	8711559135588
Order code	13558899
Numerator – quantity per pack	1

Lineco TMS022

Numerator – packs per outer box	9
Material no. (12NC)	910402207503
Net weight (piece)	1.256 kg

650°C IP 20 IK 02

Dimensional drawing

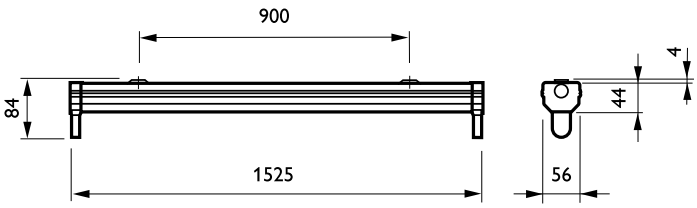

TMS022

Photometric data

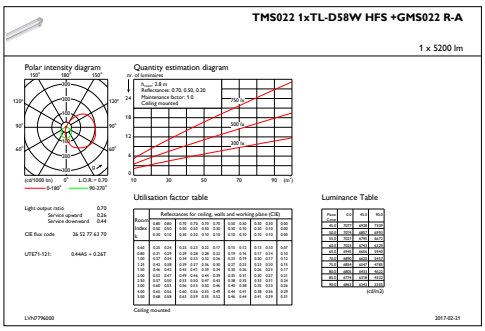

IFGU1_TMS0221xTL-D58WHFS+GMS022R-A

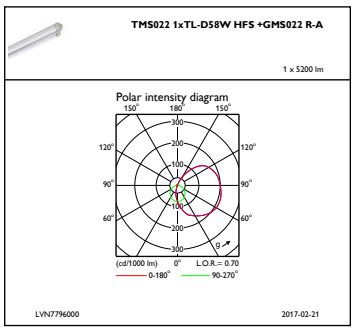

IFPC1_TMS0221xTL-D58WHFS+GMS022R-A

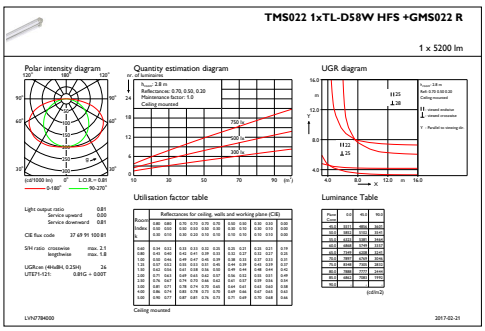

IFGU1_TMS0221xTL-D58WHFS+GMS022R

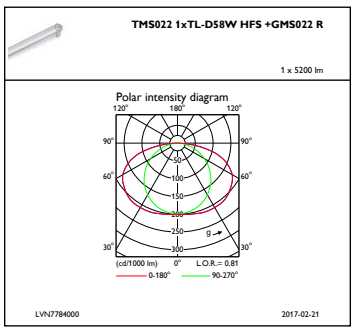

IFPC1_TMS0221xTL-D58WHFS+GMS022R

Lineco TMS022

Photometric data

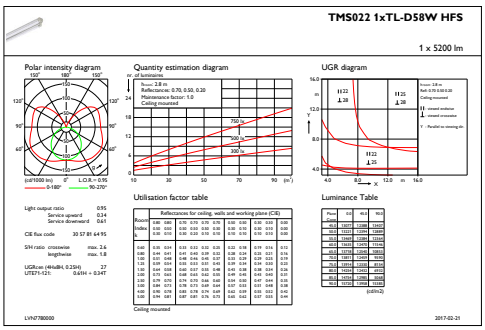

IFGU1_TMS0221xTL-D58WHFS

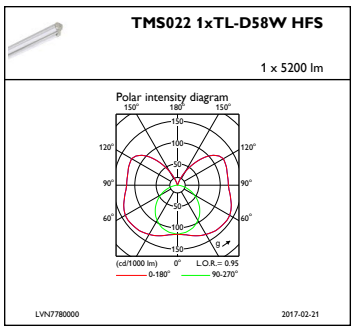

IFPC1_TMS0221xTL-D58WHFS

© 2017 Philips Lighting Holding B.V. All rights reserved. Philips Lighting reserves the right to make changes in specifications and/or to discontinue any product at any timewithout notice or obligation and will not be liable for any consequences resulting from the use of this publication.