

MASTERLine ES

MASTERLine ES 45W GU5.3 12V 36D 1CT/4X5F

Low-voltage halogen burner with very high energy efficiency and long lifetime thanks to IRR coating in glass reflector. Ideal solution for small decorative luminaires, putting your objects in the spotlight. Dichroic coating prevents heat transmission onto the object.

PHILIPS

Product data

• General Information

Cap base	GU5.3 [GU5.3]
Philips code	18144
Bulb shape	MR16 [2inch/50mm]
Operating position	UNIVERSAL [Any or Universal (U)]
ANSI code halogen	na [not applicable]
Nominal lifetime (nom.)	5000 h

• Light Technical

Beam Angle (Nom)	36 °
Luminous flux (rated) (nom.)	830 lm
Luminous intensity (max.)	2850 cd
Rated beam angle	36 °
Correlated colour temperature (nom.)	3000 K
Color rendering index (nom.)	100
LLMF at end of nominal lifetime (min.)	80 %
Luminous Flux In 90° Cone (Rated)	830 lm

• Operating and Electrical

Power (Rated) (Nom)	45.0 W
Lamp current (nom.)	3.75 A
Wattage equivalent	68 W
Starting time (nom.)	0.0 s
Warm-up time to 60% light (nom.)	instant full light
Power factor (nom.)	1
Voltage (Nom)	12 V

• Controls and Dimming

Dimmable	Yes

• Approval and Application

Energy efficiency label (EEL)	B
Energy Consumption kWh/1000 h	48 kWh

• Luminaire Design Requirements

Bulb temperature (max.)	410 °C
Cap base temperature (max.)	410 °C

• Product Data

Full product code	871150042444071
Order product name	MASTERLine ES 45W GU5.3 12V 36D 1CT/4X5F
EAN/UPC – product	8711500424440
Order code	42444071
Numerator – quantity per pack	1
Numerator – packs per outer box	20
Material no. (12NC)	924896117101
Net weight (piece)	30.000 g
ILCOS Code	HRGS-45-12-GU5.3-50/36

Dimensional drawing

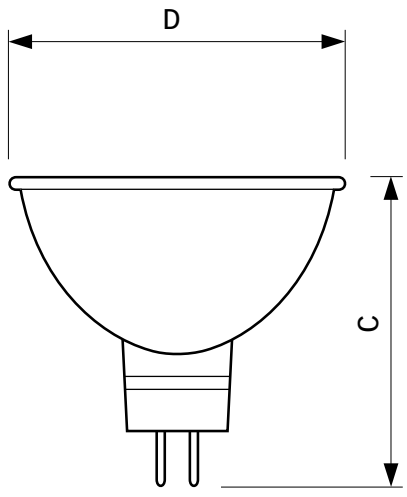

GU5.3, MR16

MLES 18144 45W GU5.3 12V MR16 36D

Product	D	C1
MASTERLine ES 45W GU5.3 12V 36D 1CT/4X5F	51 mm	50.5 mm

Dimensional drawing

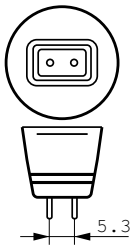

Photometric data

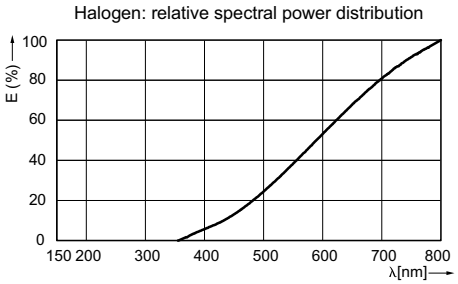

© 2016 Philips Lighting Holding B.V.
All rights reserved.

Specifications are subject to change without notice. Trademarks are the property of Koninklijke Philips N.V. (Royal Philips) or their respective owners.

www.philips.com/lighting

2016, October 10
data subject to change