

Halogen reflector

6834FO 100W GZ6.35 12V 1CT/10X5F

Quartz halogen lamps with integral reflector which serves as an efficient mirror condenser system

Product data

• General Information

Cap base	GZ6.35 [GZ6.35]
Philips code	6834FO
ANSI Code	EFP
Bulb shape	R50 [R 50mm]
Main application	Projection
Life to 50% failures (nom.)	50 h
J code	-

• Light Technical

Correlated colour temperature (nom.)	3330 K
Color rendering index (nom.)	100

• Operating and Electrical

Power (Rated) (Nom)	100 W
Voltage (Nom)	12 V

• Controls and Dimming

Dimmable	yes

• Mechanical and Housing

Cap base information	na [-]
Bulb material	Quartz-UV Open
Filament shape	-
Filament dimensions WxH	-

• Luminaire Design Requirements

Bulb temperature (max.)	900 °C
Pinch temperature (max.)	400 °C
Working distance WD	32 mm

• Product Data

Full product code	871150040973760
Order product name	6834FO 100W GZ6.35 12V 1CT/ 10X5F
EAN/UPC – product	8711500409737
Order code	40973760
Local Code	A1231
Numerator – quantity per pack	1
Numerator – packs per outer box	50
Material no. (12NC)	924048417104
Net weight (piece)	0.023 kg

PHILIPS

Halogen reflector

Dimensional drawing

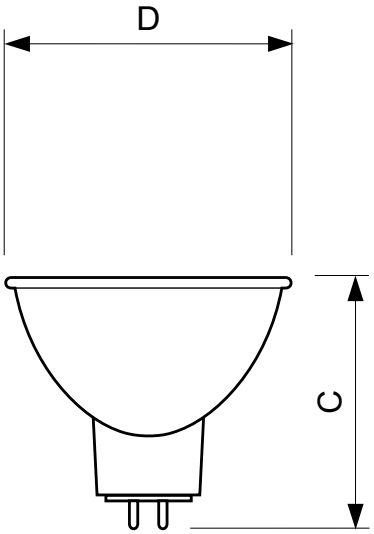

GX5.3, GY5.3, GZ6.35

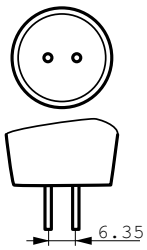

6834FO 100W GZ6.35 12V

Product	D	C
6834FO 100W GZ6.35 12V 1CT/10X5F	50 mm	42 mm

© 2016 Philips Lighting Holding B.V.
All rights reserved.

Specifications are subject to change without notice. Trademarks are the property of Koninklijke Philips N.V. (Royal Philips) or their respective owners.

www.philips.com/lighting

2016, October 10
data subject to change