PHILIPS

4404.016.99231
Last update: 05/09/14

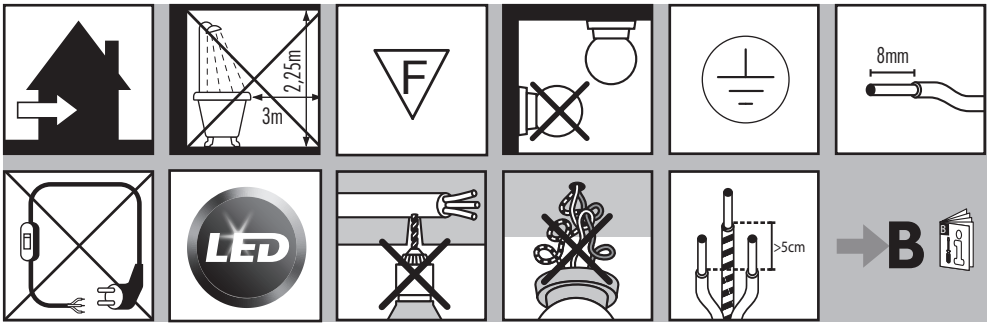

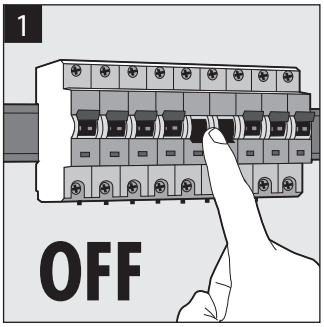

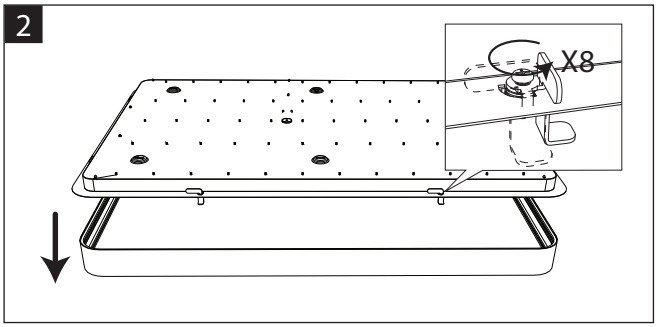

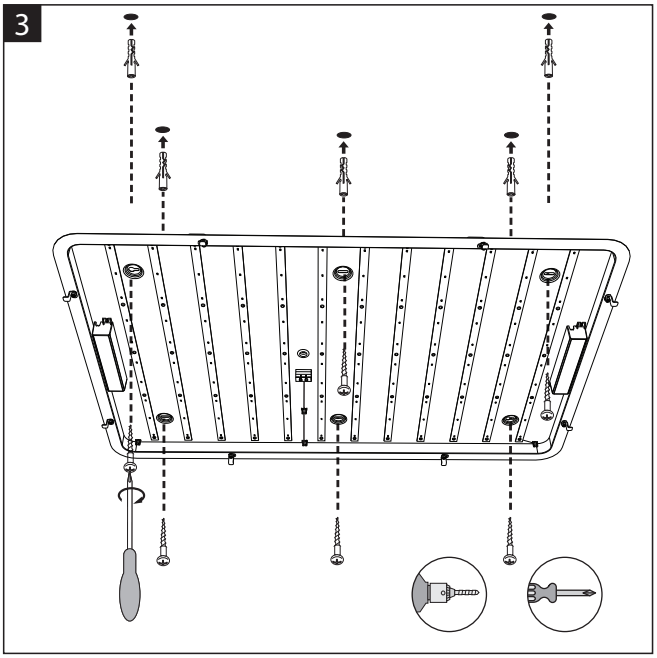

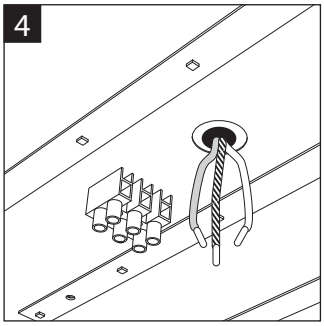

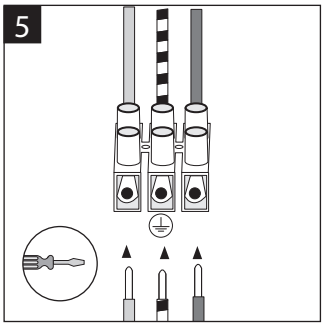

© Copyright

440401699231.indd 1 9/18/2014 11:06:59 AM

PHILIPS

6

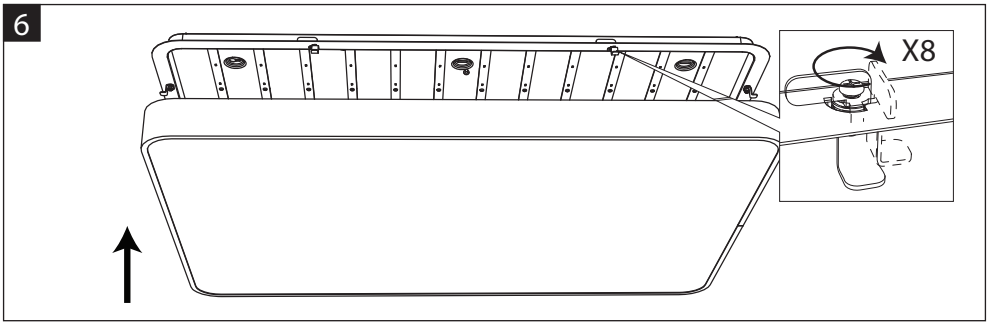

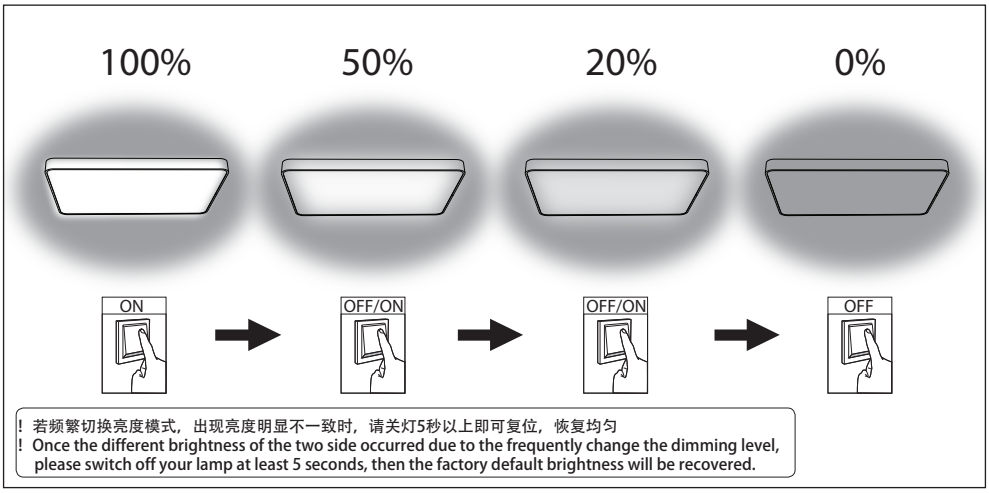

! 若频繁切换亮度模式，出现亮度明显不一致时，请关灯5秒以上即可复位，恢复均匀
! Once the different brightness of the two side occurred due to the frequently change the dimming level, please switch off your lamp at least 5 seconds, then the factory default brightness will be recovered.

PHILIPS (CHINA) INVESTMENT CO., LTD.
1602-1605, No. 218 Tian Mu Xi Road, Shanghai, PRC 200070
飞利浦(中国)投资有限公司
上海市天目西路218号1602-1605 (邮编：200070)

440401699231.indd 2 9/18/2014 11:07:00 AM