ThinkStation P300 Tower Platform Specifications

Components	Specification
Chipset	Intel C226 Chipset
Intel AMT	Intel Active Management Technology 9.5 supported on Xeon models
Processor	One LGA1150 socket, supports one processor from the following: • Xeon E3-12x1 v3: up to 4C/3.7GHz/1600MHz/8MB • Xeon E3-12x6 v3: up to 4C/3.6GHz/1600MHz/8MB • Xeon E3-12x0 v3: up to 4C/3.6GHz/1600MHz/8MB • Xeon E3-12x5 v3: up to 4C/3.5GHz/1600MHz/8MB • Core i7: up to 4C/3.6GHz/1600MHz/8MB • Core i5: up to 4C/3.5GHz/1600MHz/6MB • Core i3: up to 2C/3.7GHz/1600MHz/4MB
Memory DIMM slots	Four DDR3 DIMM slots, 2-channel (integrated memory controller in processor)
Memory type	1600MHz DDR3, UDIMM, ECC or non-ECC (ECC and non-ECC DIMMs cannot be mixed on the same system)
Memory capacity	Up to 32GB
Intel HD Graphics in processor	Integrated Intel HD P4600 in Xeon E3-12x5 v3/E3-12x6 v3 processors. Or Intel 4600 in Core i7, i5, or i3 processors. Works along with discrete graphics to support multi-display, enables three display connectors (2 DP, 1 VGA) on rear
Discrete graphics	Two PCI Express x16 slots for graphics adapters (see Expansion section); up to two Quadro K2200 on 280 watts models, up to two Quadro K2200 or up tp one Quadro K4200 on 450 watts models,
Onboard drive controller	Four onboard SATA 6.0Gb/s connectors for optical and disk drives, one SATA connector for optional eSATA, RAID 0, 1, 5, 10 support
Standard drive Bays	Two external 5.25" bays, two internal 3.5" bays (see right)
Maximum internal storage	Up to 8TB (4TB 3.5" x 2) with standard disk bay configuration, up to 16TB (4TB 3.5" x 4) with optional disk bay configuration
Onboard Ethernet	One onboard gigabit ethernet, Intel I217LM, supports Wake-on-LAN
HD Audio	Realtek ALC662 codec
TPM	Standard, TCG 1.2-compliant
Power supply	Supports one of the following: • 280 watts with variable speed fan, autosensing, 85% PSU, Climate Savers Computing Bronze, 80 PLUS Bronze qualified • 450 watts with variable speed fan, autosensing, 92% PSU, Climate Savers Computing Platinum, 80 PLUS Platinum qualified
Expansion slots	1: half-length, full-height, PCIe 3.0 x16 (near CPU) 2: half-length, full-height, PCIe 2.0 x1 3: half-length, full-height, PCIe 2.0 x16 (x4 elec) 4: half-length, full-height, PCI 2.3
Front ports	Two USB 3.0, microphone (3.5mm), headphone (3.5mm)
Rear ports	1 VGA and 2 DisplayPort (for Intel HD Graphics models only), two USB 2.0, four USB 3.0 (blue), one serial (9-pin), one ethernet (RJ-45), three analog audio ports (line-in, line-out, mic-in)

Components	Specification
IEEE 1394 (optional)	1 front, 1 rear, via optional 1394 adapter
Keyboard/Mouse	104-key USB keyboard/Optical Wheel Mouse (USB connector)
Mechanical	• Raven black color; metal case • 6.89"W x 16.77"D x 14.8"H • 175mm W x 426mm D x 376mm H • 28.66 lb (13kg) max configuration • 25-liter
Environmental certifications	GREENGUARD certified/RoHS-compliant/EPEAT Gold rating/ ENERGY STAR 6.0 qualified
ISV certifications	For the latest list of certifications, please visit *www.lenovo.com/support/ISV*

Drive Bays for ThinkStation P300 Tower

1: 5.25”, for optional optical/flex module/HDD bay
2: 5.25”, for optional optical/flex module/HDD bay
3: Optional 9-in-1 single slot reader
4: Optional MSATA SSD drive
5: Standard 3.5" HDD bay
6: Standard 3.5” HDD bay

Note:
1. Flex module supports one or more of the following: 9.5mm optical/29-in-1 reader/front IEEE 1394/front eSATA. Up to one flex module is supported per system.
2. The bracket of HDD bay is optional and comes with the corresponding drives.

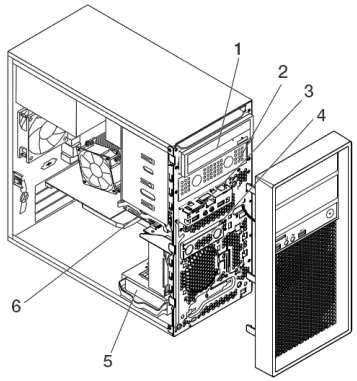

Supporting NVIDIA graphics list

Adapter	Cores	Memory	Power	Connector***
NVS 310	48	512MB	19.5W	2xDP
NVS 315	48	1024MB	19.5W	2xDVI-I SL/2xDP
NVS 510	192	2048MB	33.4W	4xmini DP
Quadro 410	192	512MB	36.7W	1xDVI-I DL+1xDP
Quadro K600	192	1GB	41W	1xDVI-I DL+1xDP
Quadro K2000	384	2GB	51.1W	1xDVI-I DL+2xDP
Quadro K2000D	384	2GB	51.1W	1xDVI-I DL +1xDVI-D DL +1xmini DP
Quadro K4000	768	3GB	80W	1xDVI-I DL+2xDP
Quadro K420	192	1GB	41W	1xDVI-I DL+1xDP
Quadro K620	384	2GB	45W	1xDVI-I DL+1xDP
Quadro K2200	640	4GB	68W	1xDVI-I DL+2xDP
Quadro K4200	1344	4GB	108W	1xDVI-I DL+2xDP

**** DL = Dual link, SL = Single Link, DP = DisplayPort 1.2*

Supporting storage list

3.5" SATA HDD (7.2K 6Gbs)	500GB/1TB/2TB/3TB/4TB/ 1TB hybrid/2TB hybrid
2.5" SATA HDD (10K 6Gbs)	250GB/500GB/1TB
2.5" SATA SSD (6Gbs)	128GB/180GB/240GB/256GB/ 256GB OPAL/480GB/ 512GB/1TB
MSATA SSD	24GB

© Copyright Lenovo 2015. All rights reserved.

Model	30AH004C++
Product	P300 Tower
Region	EMEA
Machine Type	30AH
TopSeller	Yes
Processor	Xeon E3 -1231 v3 4C/3.4GHz/8MB/1600MHz
Memory	1x4GB 1600MHz non-ECC
Discrete graphics	Quadro K620 2GB
Internal disk drive	1x256GB 2.5" SATA6Gbs SSD
Optical	DVD±RW
Media Reader	9-in-1
Power supply	280W Bronze
1394	No
eSATA	No
Preloaded OS	Win7 Pro64 (Win8.1 Pro64 DG)
Base Warranty	3-year
Global	No
Ann Date (mm/yy)	09/14


ThinkStation


lenovo
ThinkStation


ThinkStation


lenovo
ThinkStation