ACM 814/BA/WH

12NC: 859991014270

GTIN (EAN) code: 8003437830969

Whirlpool
SENSING THE DIFFERENCE



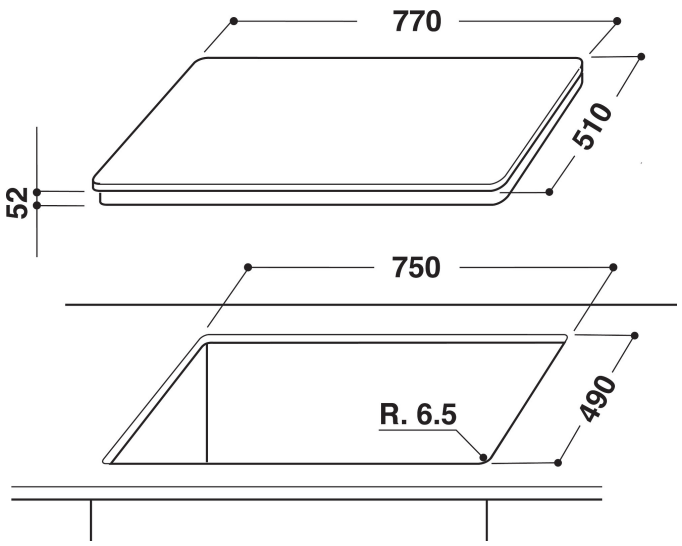

- 4 induction cooking zones
- FlexiCook
- Residual heat indicator
- Child lock
- On/Off Switch
- 77 cm hob
- Timer
- Slider touch control
- White Glass Hob
- 4 Boosters
- 4 Plate on Indicator
- Total power declared: 7.2 kW
- Power on indicator
- Supply cord included
- Power manager: maximum power setting 2,5 kW/4 kW/6 kW/7,4 kW
- 4 sides bevelled

Whirlpool induction glass-ceramic hob - ACM 814/BA/WH

4 induction rings. flexiCook zone technology, allowing you to combine multiple burners into a single cooking zone, for larger pots and pans. Intuitive slider, for effortless control of your appliance settings. This Whirlpool induction glass-ceramic Hob features: An elegant technology, that heats the pan, not the hob, reducing energy dispersion and providing perfect cooking results. Electric power supply.

Slider
Intuitive cooking. The intuitive touch-sensitive Slider allows you to control the power for each hob whilst the illuminated display shows you which cooking zones are currently being used.

Power management
Outstanding energy efficiency. With the Power Management function, you set the hob's power level, to avoid the risk of overloading the power supply in your home.

Booster
Enjoy super fast boiling times with the Booster cooking zone.

Flexible Cooking
Automatic power settings. Select the cooking function on your touch display and your hob will automatically adjust the power level accordingly.

FlexiCook
Flexibility and performance. FlexiCook provides flexible cooking space for pots and pans of any size.

Induction technology
Faster, energy-efficient cooking. Induction technology heats the pan, not the hob, reducing energy dispersion by 10%, and providing perfect cooking results.

Front Controls
Complete control over your cooking. Easily accessible and genuinely intuitive, the controls are conveniently positioned on the front panel of your hob, providing a frictionless cooking experience.

ACM 814/BA/WH

12NC: 859991014270

GTIN (EAN) code: 8003437830969

Whirlpool
SENSING THE DIFFERENCE

MAIN FEATURES

Product group	Hob
Construction type	Built-in
Type of control	Electronic
Type of control settings	-
Number of gas burners	0
Number of electric cooking zones	4
Number of electric plates	0
Number of radiant plates	0
Number of halogen plates	0
Number of induction plates	4
Number of electric warming zones	0
Location of control panel	Front
Basic surface material	Glass
Main colour of product	White
Electrical connection rating (W)	7200
Gas connection rating (W)	0
Current (A)	31,3
Voltage (V)	230
Frequency (Hz)	50/60
Length of Electrical Supply Cord (cm)	120
Plug type	No
Gas connection	N/A
Width of the product	770
Height of the product	52
Depth of the product	510
Minimum niche height	30
Minimum niche width	750
Niche depth	490
Net weight (kg)	11.8
Automatic programmes	No

TECHNICAL FEATURES

Power on indicator	Yes
Number of indicators	4
Type of regulation	Stepless energy regulated
Type of lid	Without
Residual heat indicator	Separate
Main on/off switch	Yes
Safety device	-
Timer	Yes

PERFORMANCES

Energy input	Electric