AKR 767 IX

12NC: 857876718000

GTIN (EAN) code: 8003437214615

SENSING THE DIFFERENCE



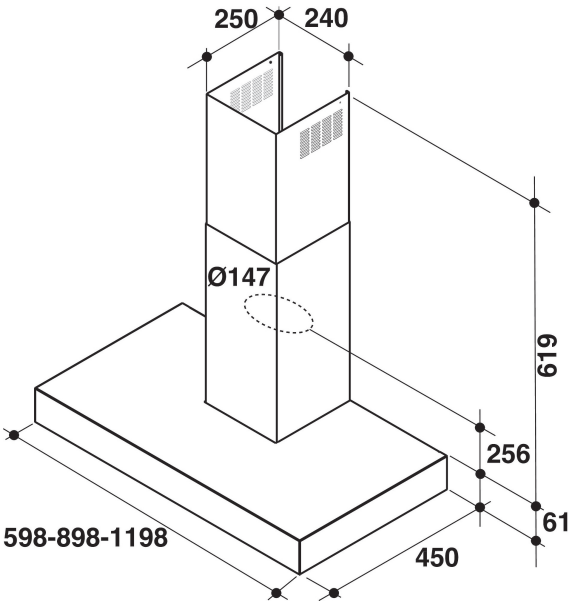

MAIN FEATURES

Product group	Hood
Colour body	Inox
Material body	Stainless steel
Colour chimney	Inox
Material chimney	Stainless steel
Typology	Wall-mounted
Installation type	Wall-mounted
Type of control	Electronic
Type of control settings	-
Decor panel options	N/A
Motor location	Integrated motor in hood chimney
Operating Mode	Convertible
Electrical connection rating (W)	215
Current (A)	0,6
Voltage (V)	220-240
Frequency (Hz)	50
Length of Electrical Supply Cord (cm)	150
Plug type	Schuko
Chimney height (mm)	92-622
Height of product, without chimney (mm)	530
Height of the product	1152
Width of the product	898
Depth of the product	450
Minimum niche height	0
Minimum niche width	0
Niche depth	0
Net weight (kg)	19.3

TECHNICAL FEATURES

Type of manual control devices	Touch control
Type of automatic control devices	-
Number of motors	1
Total power of the motors (W)	175
Number of speed settings: boost option availability	3
Boost presence	No
Maximum output air extraction (m^3/h)	630
Boost position air extraction (m^3/h)	0
Maximum output recirculating air (m^3/h)	455
Boost position output recirculating (m^3/h)	0
Light Control Type	On/Off
Number of lights	2
Type of lamps used	Halogen
Total power of the lamps (W)	40
Diameter of air outlet (mm)	150
No-return airflow flap	No
Grease filter material	Washable stainless steel
Odour filter	No

PERFORMANCES

Sound power at min. speed (2010/30/EU)	70
Sound power at max. speed (2010/30/EU)	65
Noise level with boost position (dB(A) re 1 pW)	0