AMW 730/WH

12NC: 858773001940

GTIN (EAN) code: 8003437394997

Whirlpool
SENSING THE DIFFERENCE



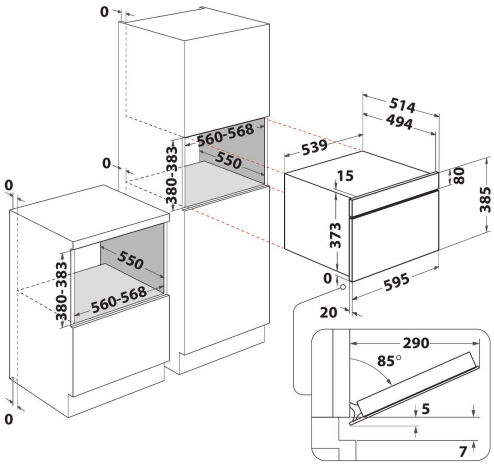

- 6TH Sense technology
- 6TH Sense CRISP Function with CRISP Plate
- Crisp Function
- Cavity 31 L
- Jet menu crisp
- Jet Start: rapid food reheating
- Jet Defrost: fast reheating
- 1000 W microwave
- Protruding handle
- 32 cm turntable
- Frontal ventilation
- Drop down opening
- Crisp plate and handle
- Crisp Function with Crisp Plate
- Favourites
- 3 Cooking Methods: Microwave, Grill, Crisp
- Easy to Clean Technology

Whirlpool built in microwave oven: white color - AMW 730/WH

This Whirlpool built in Microwave Oven features: white color. Outstanding cavity size. Grill function. Exclusive 6th SENSE technology, that automatically sets the time, temperature and energy consumption, during cooking. Crisp function, for unbeatably crisp quiches, pizzas and pies.

Dual Crisp
Enjoy an unbeatable crispness outside and a delicious tenderness inside, with DualCrisp. An exclusive technology by Whirlpool. Two microwave emission points to completely enfold food and evenly cook it also from the bottom.

Grill
Fast grilling, faster cleaning. Your Microwave's powerful grilling function provides the same delicious results as a traditional oven. The tilting motion of the grill also ensures easier cleaning.

JetDefrost
Fast defrosting. Use the unique JetDefrost 3D system to defrost food effectively and with ease in your microwave oven.

Jet Start
Outstanding reheating speed. The JetStart function boosts the heat inside the oven to the maximum for 30 seconds, providing the ideal temperature to reheat food with high water content such as clear soups or beverages.

6TH SENSE technology
Confident cooking. With 6TH SENSE technology, your microwave automatically sets the time, temperature and energy levels during the cooking process.

6TH SENSE technology Absolute
Always reach outstanding results. Thanks to the intuitive 6thSense central knob, you can easily set your microwave in few simple steps. Select one of the 6thSense 15 pre-set cooking cycles and your microwave automatically adapts time and power level needed.

Crisp
Unbeatable crispness. This Whirlpool Microwave's Crisp function and dedicated pan ensures you can cook the crispiest pizza, pie or quiche, anytime.

31 litres capacity
More room for your cooking creations. This Whirlpool Microwave offers an outstanding 31-litre capacity, ensuring you'll never run out of space to explore new recipes.

AMW 730/WH

12NC: 858773001940

GTIN (EAN) code: 8003437394997

Whirlpool
SENSING THE DIFFERENCE

MAIN FEATURES

Product group	Microwave
Commercial code	AMW 730/WH
Main colour of product	White
Type of micro-wave oven	MW+Grill function
Construction type	Built-in
Type of control	Electronic
Type of control settings	LCD
Additional cooking method Grill	Yes
Crisp	Yes
Steam	No
Additional cooking method Fan cooking	No
Clock	Yes
Automatic programmes	Yes
Height of the product	385
Width of the product	595
Depth of the product	468
Minimum niche height	380
Minimum niche width	556
Niche depth	550
Net weight (kg)	27
Cavity capacity (l)	31
Turntable	Yes
Turntable diameter (mm)	325
Integrated Cleaning system	No

TECHNICAL FEATURES

Current (A)	10
Voltage (V)	230
Frequency (Hz)	50
Length of Electrical Supply Cord (cm)	135
Plug type	Schuko
Timer	No
Grill power (W)	800
Type of grill	Quartz
Cavity material	Stainless steel
Interior light	Yes
Additional cooking method Grill	Yes
Position of interior lights of the cavity	Right side
Maximum Air flow -	0
Minimum air flow -	0
Sound power at max. speed (2010/30/EU) -	0
Sound power at min. speed (2010/30/EU) -	0

PERFORMANCES

6th Sense / Dynamic Intelligence	6th Sense
Number of power levels	7
Maximum micro-wave power (W)	1000
Bread defrost	No
Jet defrost	Yes
Jet start	Yes
Energy efficiency class - NEW (2010/30/EU) -	-