Copystar

CS-1820
CS-1820LA

PARTS LIST

Published in September 2006
2GM70951
Rev.1

NOTES

1. Indicate parts number and machine model when placing an order.

e.g. Parts Number	Parts Name	Machine Model	Frequency	Quantity
302GM04040	COVER FRONT(CPY)	CS-1820	60Hz	1
302GM04050	COVER FRONT LA(CPY)	CS-1820LA	60Hz	1

2. Service calls and freight will be charged separately.

3. Symbols in the "Parts Number" column.

- Parts with "•" are component parts or sub-assemblies of the assembly appearing immediately above them.

e.g. Parts Number	Parts Name	Parts Number	Parts Name
5SNSA2DC++13	PARTS,MPF COVER SP	•5MVX861SH004	TRAY MPF A
		•5MVX751SH001	TRAY MPF B

- Parts with "⊙" indicate the spare parts and the parts without "⊙" can not be supplied.

CONTENTS

FIG. 1 Exterior Covers 2
FIG. 2 Frames & Paper Feed Section I 4
FIG. 3 Paper Feed Section II & LSU 6
FIG. 4 Driving Section 8
FIG. 5 Process Unit 10
FIG. 6 Fuser Unit 12
FIG. 7 Cassette 14
FIG. 8 Optical Section 16
FIG. 9 Operation Unit & Original Holder 18
FIG. 10 Electrical Components 20
FIG. 11 Tools & Supplied Parts 22

• INDEX 24

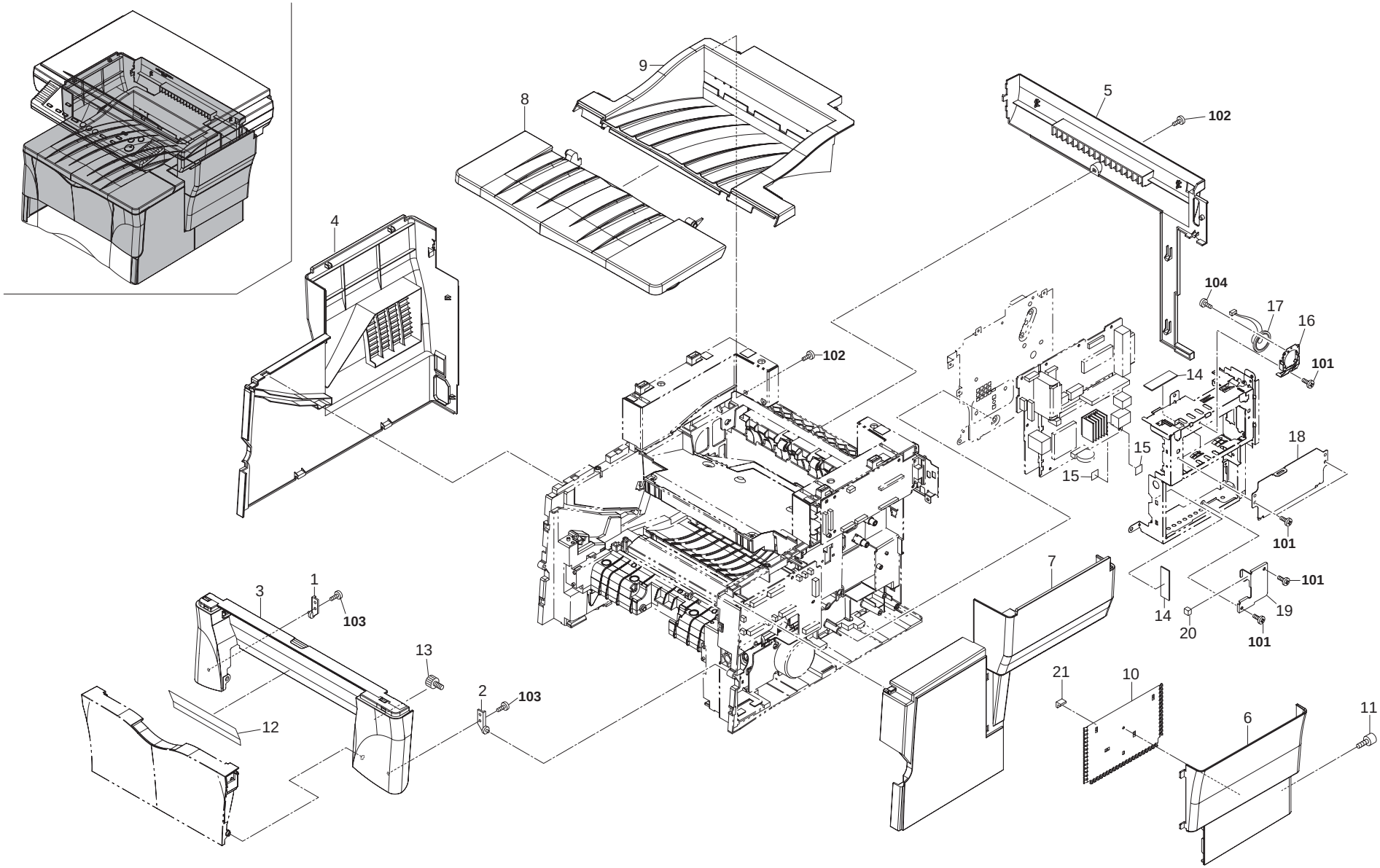
1
2
3
4
5
6
7
8
9
10
11
12
13
14
15
16
17
18
19
20
21
101
102
103
104

FIG. 1 Exterior Covers

2GM

SP	Ref. No.	Part.No.	Alternative.	Description	Quantity 120	Quantity 220
	1	5MVX422DN005	2A804080	HINGE FRONT L	1	1
	2	5MVX422DN006	2A804090	HINGE FRONT R	1	1
⊙	3	302GM04040	2GM04040	COVER FRONT(CPY) (CS-1820)	1	
⊙	3	302GM04050	2GM04050	COVER FRONT LA(CPY) (CS-1820LA)		1
⊙	4	5SNSP0015024	2DC04020	COVER LEFT	1	1
	5	2DC04030		COVER REAR	1	1
⊙	6	5SNSP0015026	2DC04050	COVER DIMM	1	1
⊙	7	5SNSP0015027	2DC04060	COVER RIGHT	1	1
⊙	8	302DD04021	2DD04021	LID TOP	1	1
⊙	9	5SNSP0015030	2DC04080	COVER TOP	1	1
	10	2DC04090		PLATE SHIELD	1	1
	11	5MMT263SN012++R	2D903100	SCREW OP	1	1
	12	2DC05070		LABEL FRONT COVER	1	1
	13	302GM17010	2GM17010	RETAINING PIN MIRROR FRAME	1	1
	14	2DD27160		SHEET EMI	2	2
	15	2DD26100		SHEET MAIN PCB	2	2
	16	2DD26040		HOLDER SPEAKER	1	1
	17	3DB27160		SPEAKER(PBF)	1	1
	18	2DD26020		LID CONTROLLER L	1	1
	19	2DD26080		MOUNT SARCON MAIN	1	1
	20	2DD28120		SHEET RADIATOR C	1	1
	21	7ZGSTGL10015H01	ZG019360	SHIELD GASKET	1	1

SP	Ref. No.	Part.No.	Alternative.	Description	Quantity 120	Quantity 220
	101	B1B74100		+BIND T.T SCREW(+) / M4 X 10 CRFREE B-T		
	102	5MBTPB3006TW++R	B1A53060	+BIND TAP-TITE S SCREW M3X06		
	103	7BB300308H	BB018160	+BIND TAP-TITE B SCREW 3X8		
	104	BAB53060		+TP TAP-TITE S SCREW M3X06		

• Parts with "•" are component parts or sub-assemblies of the assembly appearing immediately above them.

• Parts with "⊙" indicate the spare parts.

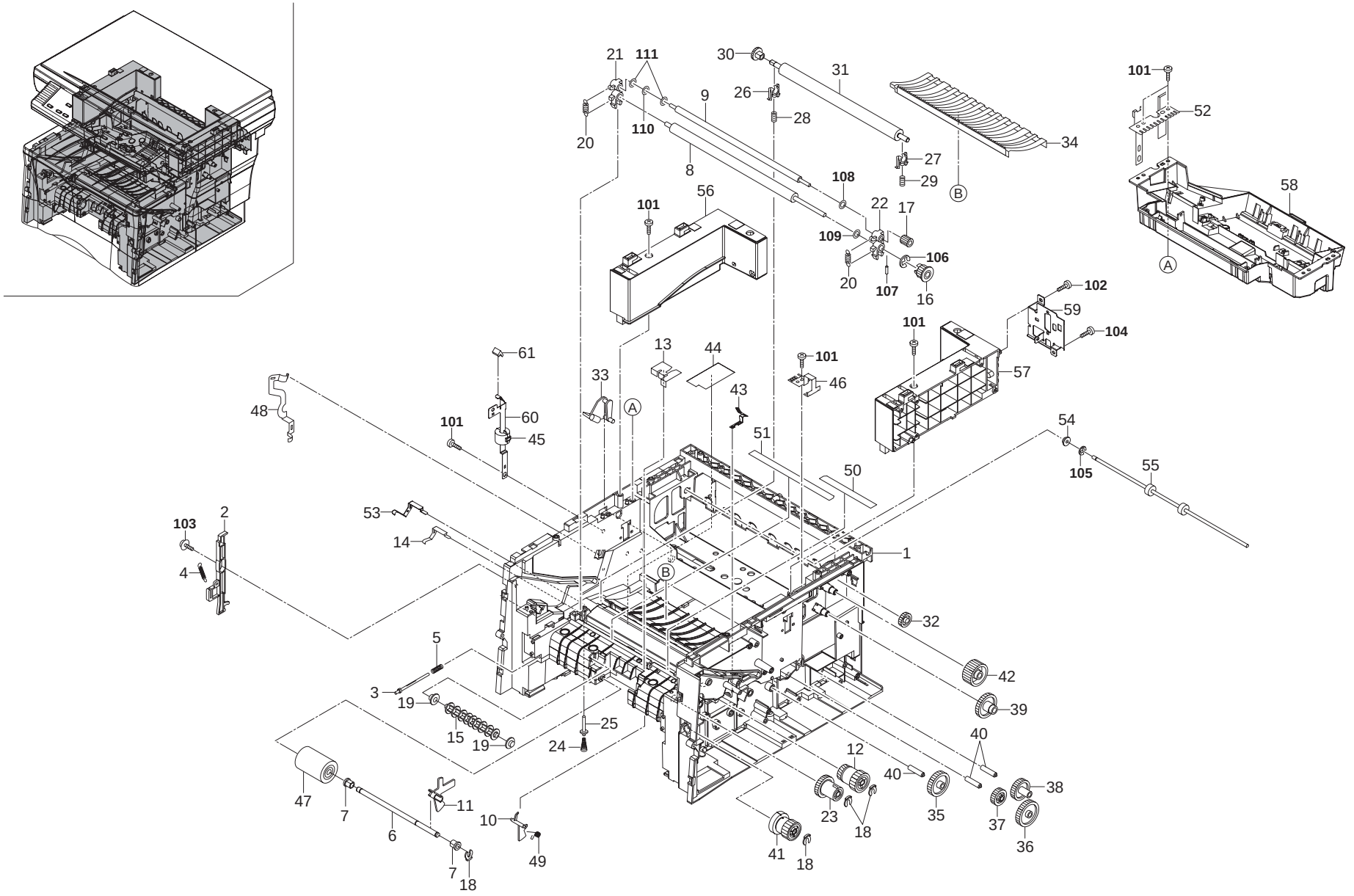
21
111
30
31
101
52
9
26
28
20
110
34
27
8
29
B
108
58
56
101
22
17
109
106
A
20
107
16
102
59
101
104
61
13
44
101
57
33
46
43
48
A
60
101
45
51
54
50
105
55
53
2
103
14
1
4
B
32
5
42
3
19
39
15
19
25
24
40
12
40
38
47
7
11
23
35
37
6
10
18
36
41
18
49
7
18

FIG. 2 Frames & Paper Feed Section I

2GM

SP	Ref. No.	Part.No.	Alternative.	Description	Quantity 120	Quantity 220
	1	2DC02010		FRAME BASE (1/8)	1	1
	2	5MVX721DN001	2A802040	LEVER INTERLOCK	1	1
	3	5MVT653DW001	2A802050	PIN CASSETTE	1	1
	4	5MMW351LD006	2A802060	SPRING INTERLOCK	1	1
	5	5MMW341LD005	2A802070	SPRING PIN CASSETTE	1	1
	6	5MMT766SN007	2A806020	SHAFT FEED	1	1
	7	5MVM176DN026	2A806030	BUSH FEED	2	2
⊙	8	5MMT876SN073	2A806040	ROLLER REGIST LOW	1	1
⊙	9	5MMT865SN010	2A806050	ROLLER REGIST UP	1	1
⊙	10	5MVX432DB009	2A806090	ACTUATOR REGIST	1	1
⊙	11	5MVX542DB003	2A806100	ACTUATOR PE	1	1
⊙	12	5AAVCLTCH016	2A806120	CLUTCH REGIST	1	1
	13	5MVS441KF008	2A806170	SHEET REGIST SW	1	1
	14	5MMX532LD005	2A806210	CONTACT EARTH REG	1	1
⊙	15	5MVT676DB002	2A806220	PULLEY FEED	1	1
⊙	16	5MVG127DB047	2A806230	GEAR REGIST Z20	1	1
⊙	17	5MVG126DB025	2A806240	GEAR REGIST Z13	1	1
⊙	18	5MVX111DN003	2A806250	RING STOPPER	4	4
	19	5MVM161DW001	2A806260	BUSH PULLEY FEED	2	2
	20	5MMW261LD023	2A806410	SPRING REGIST R	2	2
	21	5MVX221DB019	2A806420	BUSH REGIST LEFT	1	1
	22	5MVX221DW006	2A806430	BUSH REGIST RIGHT	1	1
⊙	23	5AAVCLTCH031	2FM06040	CLUTCH MPF	1	1
	24	5MMW361LD015	2A815010	SPRING PIN BIAS	1	1
	25	5MMT365SN003	2A815020	PIN CONTACT BIAS	1	1
⊙	26	5MVX221DB023	2A816020	BUSH TC L	1	1
⊙	27	5MVX221DW008	2A816030	BUSH TC R	1	1
	28	5MMW251LD043	2A816040	SPRING TC L	1	1
	29	2DC16040		SPRING TC R	1	1
⊙	30	5MVG127DB048	2A816060	GEAR TC Z18	1	1
⊙	31	2FM14070	5MMT876SN103	ROLLER TRANSFER I	1	1
⊙	32	5MVG137DN030	2A820290	GEAR EXIT Z23 UP	1	1
	33	5MVX322SB020	2A820300	ACTUATOR FUSER B	1	1
⊙	34	5AAY3010E+31	2A868610	EARTH GUIDE ASSY	1	1
⊙	35	5MVG148DN045	2A822080	GEAR Z38H	1	1
⊙	36	5MVG148DN046	2A822090	GEAR FREE Z40H	1	1
⊙	37	5MVG138DN041	2A822100	GEAR FREE Z25S	1	1
⊙	38	5MVG148DN047	2A822110	GEAR Z34S	1	1
⊙	39	5MVG148DN048	2A822120	GEAR Z40S	1	1
⊙	40	5MMT364SN003	2A822130	PIN DRIVE	3	3
⊙	41	2DC06010	5SNSP0015035	CLUTCH FEED	1	1
⊙	42	5MVG148DN049	2A822160	GEAR Z37S	1	1
	43	2DC16030		PLATE EARTH BRUSH A	1	1
	44	2DC02100		FILM PS LOW	1	1
	45	2A627940		CORE 10-20X10	1	1
	46	2DD02010		PLATE EARTH CONTROLLER	1	1
⊙	47	5AAVR0LL+044	2A806010	ROLLER FEED ASSY	1	1
	48	2BY02010	5MMX632LD008	CONTACT MAIN MR	1	1
	49	2BY06040	5MMW261LD057	SPRING ACTUATOR REG	1	1
	50	5MVS622KF011	2BY06050	SHEET REGIST R	1	1
	51	5MVS622KF012	2BY06060	SHEET REGIST L	1	1
	52	2DD02020		PLATE EARTH SW	1	1
	53	2DC26100		CONTACT TRANSFER	1	1
	54	5MVM176DW001	2A821010	BUSH EXIT	1	1
⊙	55	5MMT874SN007	2A820090	ROLLER EXIT UP	1	1
	56	2DC02020		STAY SCANNER LEFT	1	1
	57	2DC02030		STAY SCANNER RIGHT	1	1
	58	2DC02040		FRAME MIDDLE (1/3)	1	1
	59	2DC02050		MOUNT SCANNER PCB	1	1
	60	2DC02060		PLATE EARTH STAY L	1	1
	61	7ZGSTGL10015H01	ZG019360	SHIELD GASKET	1	1
	101	B1B74100		+BIND T.T SCREW(+) / M4 X 10 CRFREE B-T		
	102	5MBTPB3006TW++R	B1A53060	+BIND TAP-TITE S SCREW M3X06		
	103	B4B74100		+TP T.T SCREW(+) / M4 X 10 CRFREE B-T		
	104	BAB53060		+TP TAP-TITE S SCREW M3X06		
	105	7BD103060++H01	BD018610	E STOP RING E-3		
	106	7BD105060++H01	BD018620	E STOP RING E-5		
	107	E0020080		SPRING PIN 2X8		
	108	C2894650		POLY SLIDER /M4.1X6.5X0.25T POLY		
	109	C2892950		POLY SLIDER /M6.2X9.5X0.5T PLASTC		
	110	C3790080		WAVE WASHER / M4X8.0X0.2T SUS		
	111	C2891100		POLY-SLIDER WASHER 4.1X10X0.3T		

• Parts with "•" are component parts or sub-assemblies of the assembly appearing immediately above them.

• Parts with "⊙" indicate the spare parts.

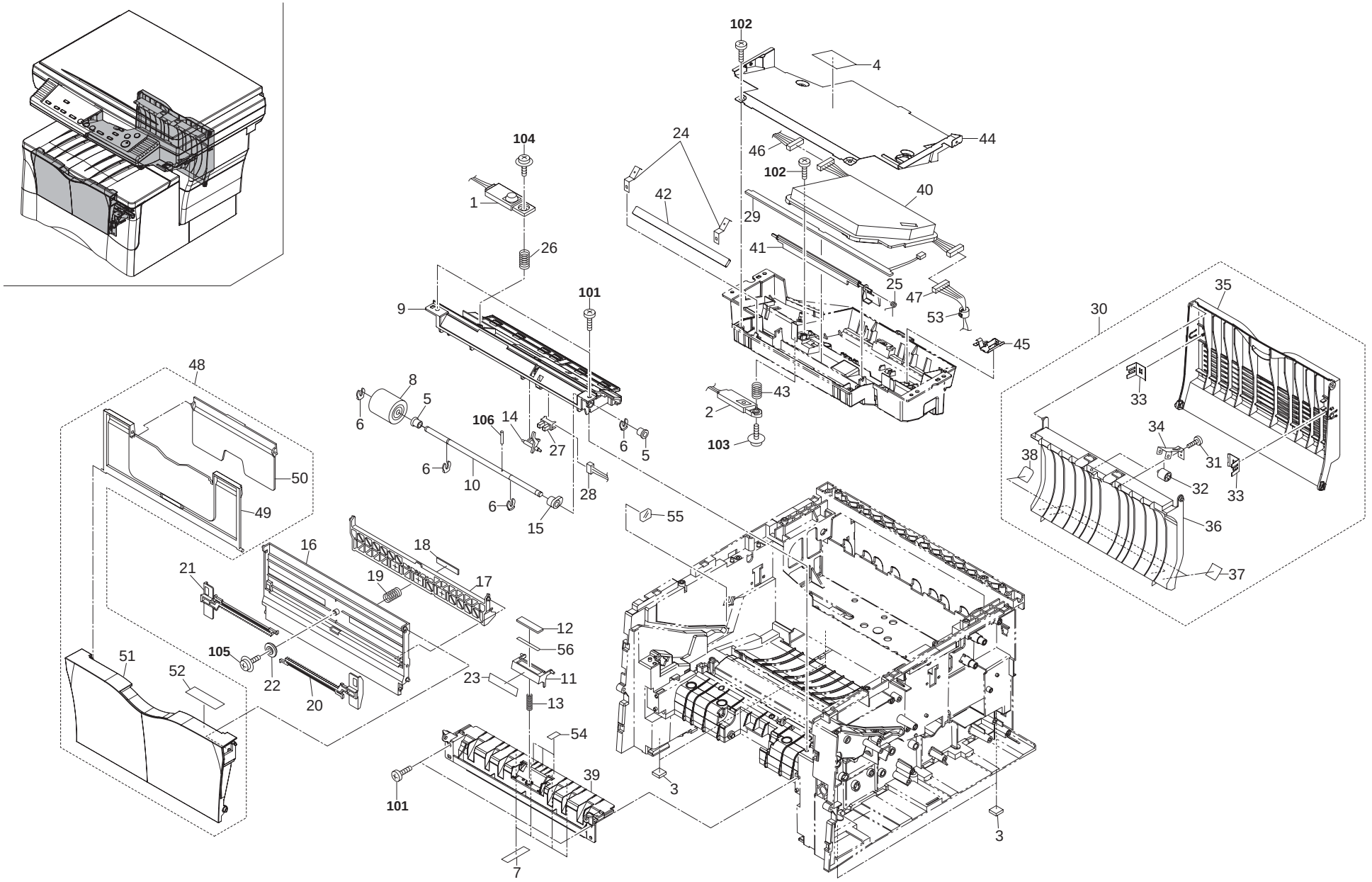
102
4
44
46
102
40
24
42
29
41
25
47
53
45
104
1
26
9
101
43
2
103
8
5
6
106
14
27
6
5
6
10
6
28
15
48
50
49
16
18
21
19
17
105
22
20
51
52
12
56
23
11
13
54
39
101
7
55
3
3
30
35
33
34
38
31
32
33
36
37

FIG. 3 Paper Feed Section II & LSU

2GM

SP	Ref. No.	Part.No.	Alternative.	Description	Quantity 120	Quantity 220
⊙	1	302GM01200	2GM01200	TE SENSOR ASSY	1	1
⊙	2	302GM01190	2GM01190	FULL SENSOR ASSY	1	1
	3	5MVS228RB019	2A802500	FOOT	4	4
	4	5MVVL661WN34	2A805010	LABEL LASER CAUTION	1	1
	5	5MVM176DN026	2A806030	BUSH FEED	2	2
⊙	6	5MVX111DN003	2A806250	RING STOPPER	4	4
	7	5MVS312KF011	2A806480	SHEET GUIDE	4	4
⊙	8	5AAVR0LL+045	2A806510	ROLLER MPF ASSY	1	1
	9	5MVX854SH002	2A806520	HOLDER MP FEED	1	1
	10	5MMT766SN008	2A806530	SHAFT MPF	1	1
	11	5MVX522DB004	2A806550	SEPARATOR MPF	1	1
	12	5MVS416XN001	2A806560	PAD SEPARATOR MPF	1	1
	13	5MMW261LD038	2A806570	SPRING SEPA MPF	1	1
	14	5MVX432DB010	2A806600	ACTUATOR MPF	1	1
	15	5MVX221DN014	2A806620	CAM MPF R	1	1
	16	5MVB872SH019	2A806661	BASE MPF	1	1
	17	5MVX852CB003	2A806670	BOTTOM PLATE MPF	1	1
	18	5MVS616XN002	2A806680	PAD BOTTOM MPF	1	1
	19	2FM06030	5MMW261LD065	SPRING BOTTOM MPF	1	1
	20	5MVX752SH002	2A806700	GUIDE MPF R	1	1
	21	5MVX752SH003	2A806710	GUIDE MPF L	1	1
	22	5MVG137DN032	2A806720	GEAR MPF	1	1
	23	5MVS431TX001	2A806760	TAPE SEPARATOR	1	1
	24	5MMX221LD024	2A813030	SPRING MIRROR	2	2
	25	5MMW341LD006	2A813050	SPRING SHUTTER LSU	1	1
	26	5MMW261LD036	2A814570	SPRING TE SENSOR	1	1
⊙	27	5FNXGP1A73A++02	2DC27180	PT.SENSOR GP1A73AJ00	1	1
	28	5AACCNRM0GEA	2A827580	CONN. CORD ASSY	1	1
⊙	29	302GM01180	2GM01180	P.W.BOARD ASSY LED	1	1
⊙	30	5AAY3010E+58	2A868700	COVER REAR ASSY	1	1
	31	•7BB300306H	BB018140	+BIND TAP-TITE B SCREW 3X6	2	2
⊙	32	•5MVM273DB005	2A820100	PULLEY EXIT	2	2
	33	•5MMX322LD022	2A820340	PLATE TRAY	2	2
	34	•5MMX332LD021	2A820850	BKT PULLEY FD	2	2
⊙	35	•5MVB874SH018	2A820950	COVER REAR	1	1
	36	•5MVB874SH019	2A820961	TRAY EXIT FU	1	1
	37	•5MVS222KN006	2A820970	SHEET REAR	2	2
	38	•5MVS222KW001	2A820980	SHEET REAR B	2	2
	39	2DC06020		GUIDE TURN A	1	1
⊙	40	302FM93111	2FM93111	LK-101	1	1
	41	2DC13020		SHUTTER LSU	1	1
	42	2DC13030		MIRROR LSU	1	1
	43	2DC13040		SPRING FULL SENSOR	1	1
	44	2DC26070		SHIELD LSU	1	1
	45	2DC26110		PLATE EARTH LSU	1	1
	46	2DC27070		WIRE MAIN-LSU	1	1
	47	2DC27140		WIRE ENGINE-LSU	1	1
⊙	48	5SNSA2DC++13	2DC93102	PARTS,MPF COVER SP	1	1
	49	•5MVX861SH004	2A806730	TRAY MPF A	1	1
	50	•5MVX751SH001	2A806740	TRAY MPF B	1	1
⊙	51	•5SNSP0015025	2DC04040	COVER MFP	1	1
	52	•2DC05090		LABEL MPF COVER	1	1
	53	2A627940		CORE 10-20X10	1	1
	54	2DC06080		SHEET MPF PAD	3	3
	55	2DC16050		SPACER TRANSFER	1	1
	56	2FM02710	5MVS422KF010	SPACER PAD	1	1
	101	B1B74100		+BIND T.T SCREW(+) / M4 X 10 CRFREE B-T		
	102	B1B73100		+BIND TAP-TITE B SCREW M3X10		
	103	7BB302308H	BB018120	+TP TAP-TITE B SCREW 3X08		
	104	B4B74100		+TP T.T SCREW(+) / M4 X 10 CRFREE B-T		
	105	7BB302305H	BB018540	+TP TAP-TITE B SCREW 3X05		
	106	E0020080		SPRING PIN 2X8		

• Parts with "•" are component parts or sub-assemblies of the assembly appearing immediately above them.

• Parts with "⊙" indicate the spare parts.

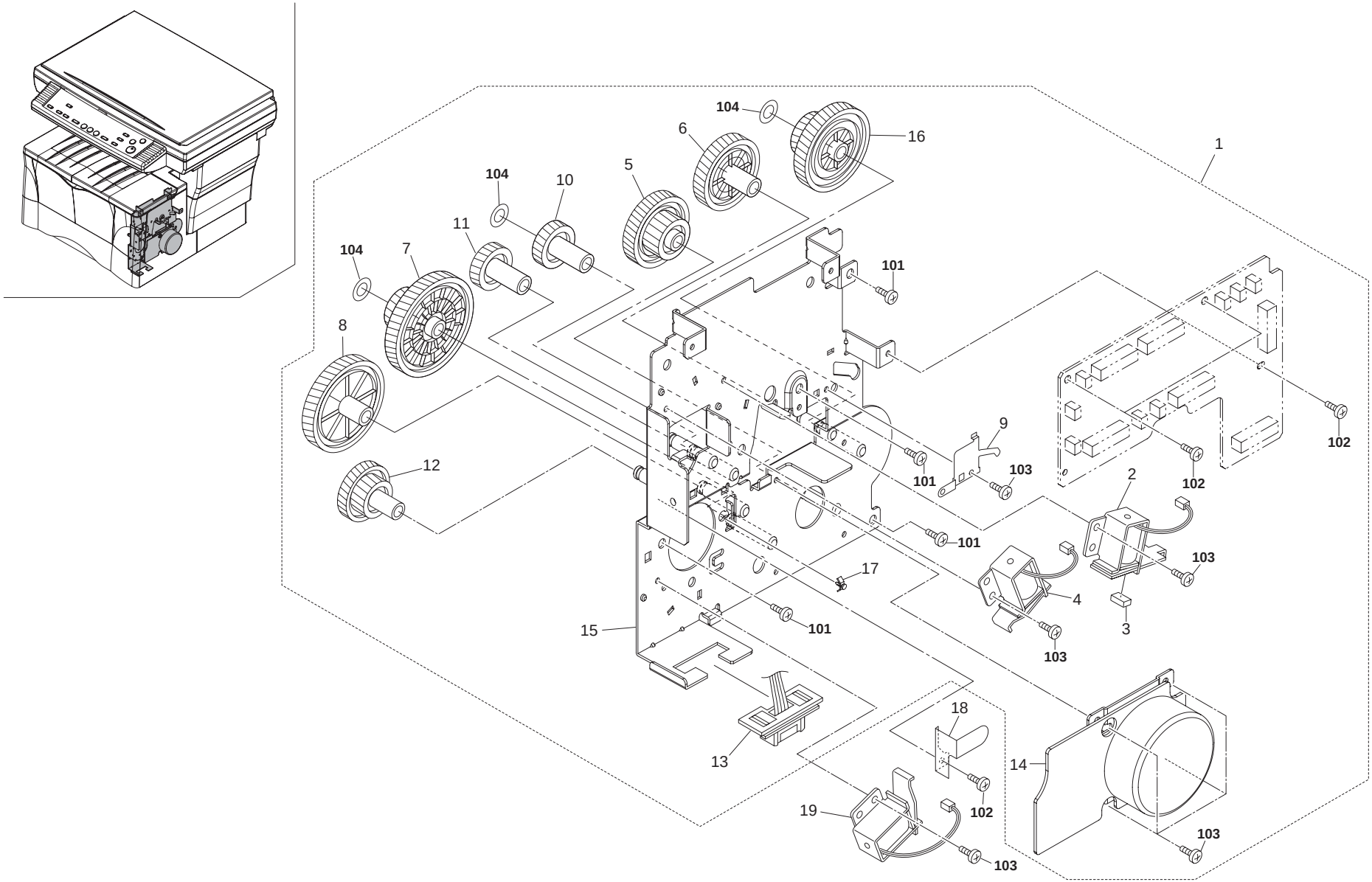
104
6
16
1
104
10
5
11
104
7
101
8
9
102
12
101
103
2
102
101
103
17
4
15
101
3
103
18
13
14
19
102
103
103

FIG. 4 Driving Section

2GM

SP	Ref. No.	Part.No.	Alternative.	Description	Quantity 120	Quantity 220
⊙	1	302DC93084	2DC93084	PARTS,DRIVE UNIT SP	1	1
⊙	2	•302GM44020	2GM44020	SOLENOID REGIST	1	1
	3	•5MVS217SN002	2A806280	PAD SOLENOID	1	1
⊙	4	•302GM44030	2GM44030	SOLENOID MPF	1	1
⊙	5	•5MVG168DN017	2A822030	GEAR Z68H-Z21H	1	1
⊙	6	•5MVG148DN044	2A822050	GEAR Z40H	1	1
⊙	7	•5MVG169DN032	2A822060	GEAR Z95H-Z21H	1	1
⊙	8	•5MVG169DN033	2A822070	GEAR Z53H	1	1
	9	•5MMX521LD005	2A822150	PLATE EARTH DRUM	1	1
⊙	10	•5MVG138DN042	2A822170	GEAR Z24H	1	1
⊙	11	•5MVG137DN029	2A822180	GEAR Z21H	1	1
⊙	12	•5MVG148DN050	2A822190	GEAR Z36H-Z21H	1	1
	13	•5AACCNRM1GEA	2A827590	CONN. CORD ASSY	1	1
⊙	14	•302DC22011	2DC22011	MOTOR MAIN	1	1
	15	•2DC22020		MOUNT MACHINE DRIVE	1	1
⊙	16	•2DC22030		GEAR 48/21	1	1
	17	•M2108800		SPACER,KGPS-3.5S(KITAGAWA)	1	1
	18	5MMX332LD013	2A806750	PLATE EARTH MPF	1	1
⊙	19	302GM44010	2GM44010	SOLENOID FEED	1	1

SP	Ref. No.	Part.No.	Alternative.	Description	Quantity 120	Quantity 220
	101	B1B74100		+BIND T.T SCREW(+) / M4 X 10 CRFREE B-T		
	102	5MBTPB3006TW++R	B1A53060	+BIND TAP-TITE S SCREW M3X06		
	103	7BB100305H	BB018180	+BIND TAP-TITE S SCREW 3X05		

• Parts with "•" are component parts or sub-assemblies of the assembly appearing immediately above them.

• Parts with "⊙" indicate the spare parts.

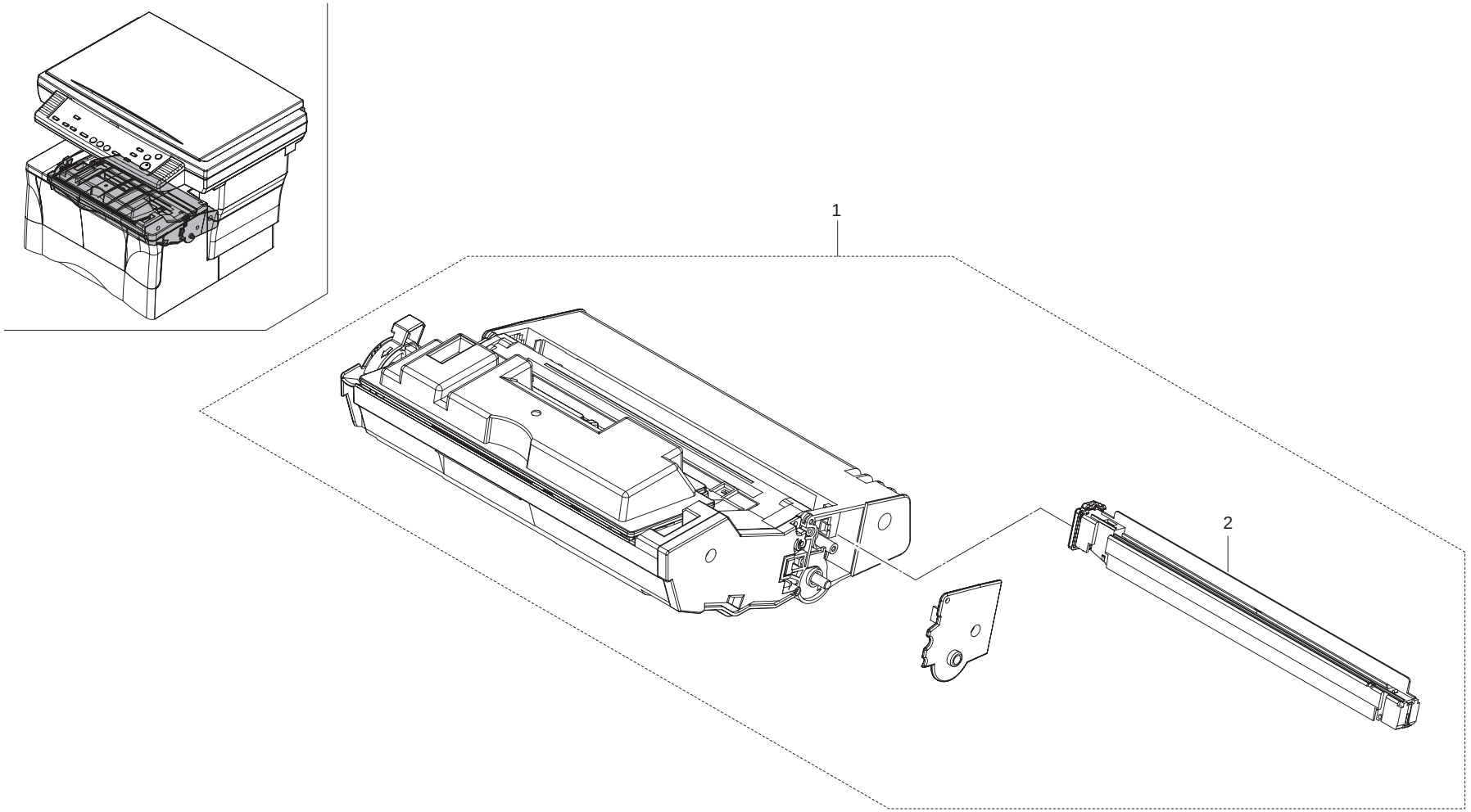
1
2

FIG. 5 Process Unit

SP	Ref. No.	Part.No.	Alternative.	Description	Quantity	
					120	220
⊙	1	2FM93093		PU-102 PROCESS UNIT	1	1
⊙	2	•5PLPWCTAPKX	2FM93120	MC-41 MCH ASSY	1	1

• Parts with "•" are component parts or sub-assemblies of the assembly appearing immediately above them.

• Parts with "⊙" indicate the spare parts.

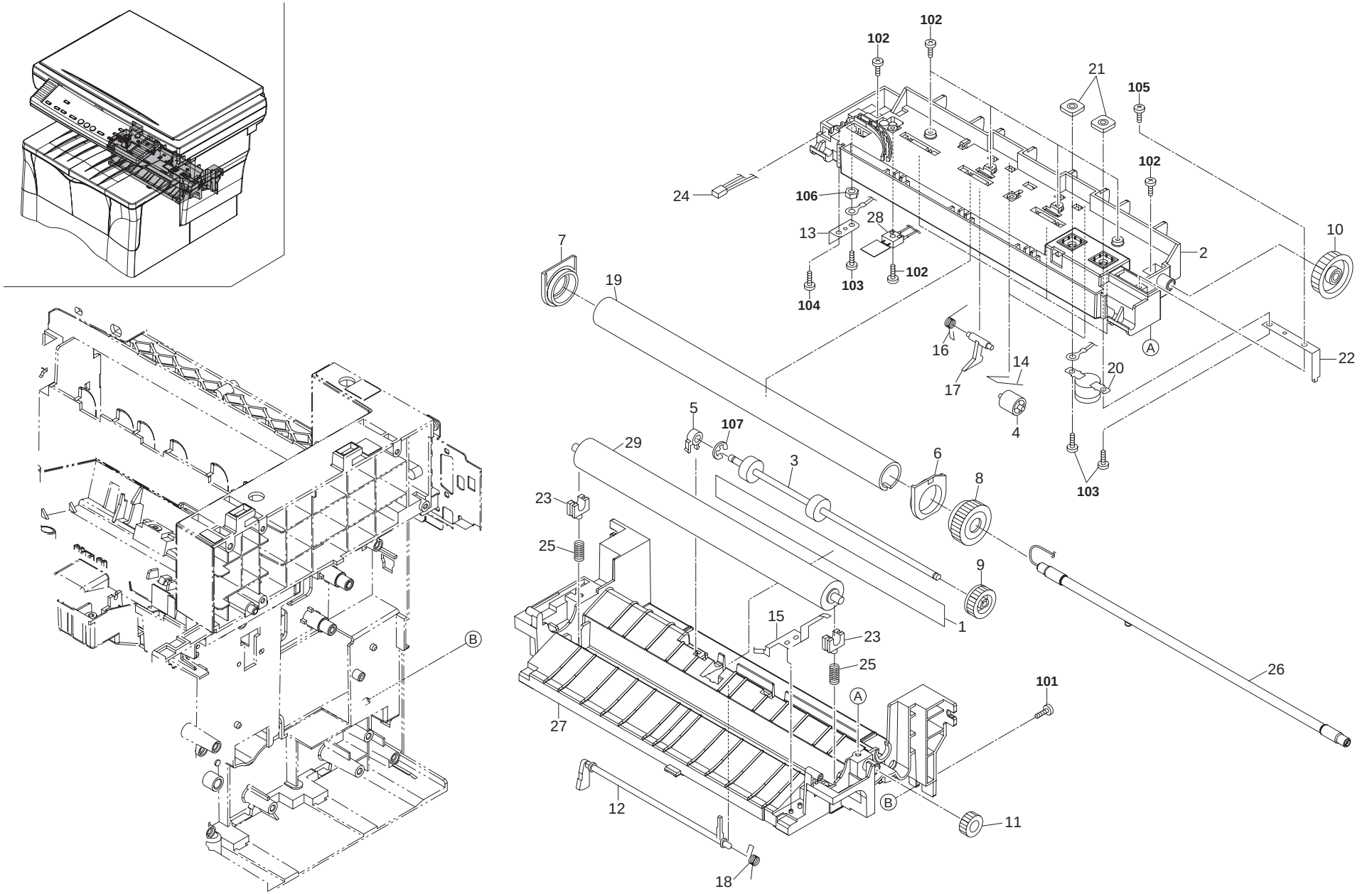
102
102
21
105
102
24
106
28
13
102
103
104
2
10
7
19
16
17
14
20
22
A
4
5
107
29
3
6
8
103
23
25
9
1
15
23
25
26
101
A
27
B
12
B
11
18

FIG. 6 Fuser Unit

2GM

SP	Ref. No.	Part.No.	Alternative.	Description	Quantity 120	Quantity 220
⊙		302DC93052	2DC93052	FK-100 FUSER UNIT (E) SP		1
⊙		302DC93062	2DC93062	FK-100 FUSER UNIT (U) SP	1	
	1	•5MVVL731WN14	2A805020	LABEL FUSER CAUTION	1	1
	2	•5MVB863KB003	2A820023	FRAME FUSER UP	1	1
⊙	3	•5MMT774SN001	2A820080	ROLLER EXIT LOW	1	1
⊙	4	•5MVM273DB005	2A820100	PULLEY EXIT	2	2
	5	•5MVX211DB016	2A820110	BUSH EXIT	1	1
	6	•5MVM188XN015	2A820120	BUSH HEAT R	1	1
	7	•5MVM188XN016	2A820131	BUSH HEAT L	1	1
⊙	8	•302A820161	2A820161	GEAR HEAT Z33	1	1
⊙	9	•5MVG137DN031	2A820170	GEAR EXIT Z23	1	1
⊙	10	•5MVG148XN009	2A820180	GEAR IDLE Z34	1	1
⊙	11	•5MVG127DN070	2A820190	GEAR IDLE Z18	1	1
	12	•5MVX731CB002	2A820200	ACTUATOR FUSER A	1	1
	13	•5MML211RD002	2A820220	HOLDER LAMP B	1	1
	14	•5MMW601LD011	2A820260	SPRING PULLEY	2	2
	15	•5MMX665LD004	2A820280	PLATE EARTH FUSER	1	1
	16	•5MMW261LD055	2A820350	SPRING SEPARATOR	4	4
	17	•5AAVSEPRT015	2A820360	SEPARATOR ASSY	4	4
	18	•5MMW261LD017	2A820520	SPRING ACTUATOR	1	1
⊙	19	•5MMT876AX002	2BY20010	ROLLER HEAT	1	1
⊙	20	•5EYFFQ16001++01	2BY20020	THERMOSTAT 250V160 C	1	1
	21	•5MMS111SL002	2BY20050	NUT FUSER A	2	2
	22	•2BY20060	5MML531CG001	HOLDER LAMP A	1	1
	23	•2BY20070	5MVX221XN004	BUSH PRESS	2	2
	24	•2BY27560	5AACCNSH3GEA	CONN. CORD ASSY		1
	24	•2BY27570	5AACCNSH4GEA	CONN. CORD ASSY	1	
	25	•2DC20010		SPRING PRESS ROLLER	2	2
⊙	26	•302DC20021	2DC20021	HEATER 230 FIXING		1
⊙	26	•302DC20031	2DC20031	HEATER 120 FIXING	1	
	27	•2DC20040		FRAME FUSER LOW (1/2)	1	1
⊙	28	•2DC20050	5SNSP0015041	THERMISTOR FUSER	1	1
	29	•2DC20060		ROLLER PRESS	1	1

SP	Ref. No.	Part.No.	Alternative.	Description	Quantity 120	Quantity 220
	101	B1B74100		+BIND T.T SCREW(+) / M4 X 10 CRFREE B-T		
	102	7BB300312H	BB018170	+BIND TAP-TITE B SCREW 3X12		
	103	5MBSP43006NW++R	B4A03060	+TP-A SCREW M3X06(TRIVALENT CHROMATING)		
	104	7BB300308H	BB018160	+BIND TAP-TITE B SCREW 3X8		
	105	7BB300306H	BB018140	+BIND TAP-TITE B SCREW 3X6		
	106	7BC1003055++H01	BC018230	HEXA NUT M3		
	107	7BD103060++H01	BD018610	E STOP RING E-3		

• Parts with "•" are component parts or sub-assemblies of the assembly appearing immediately above them.

• Parts with "⊙" indicate the spare parts.

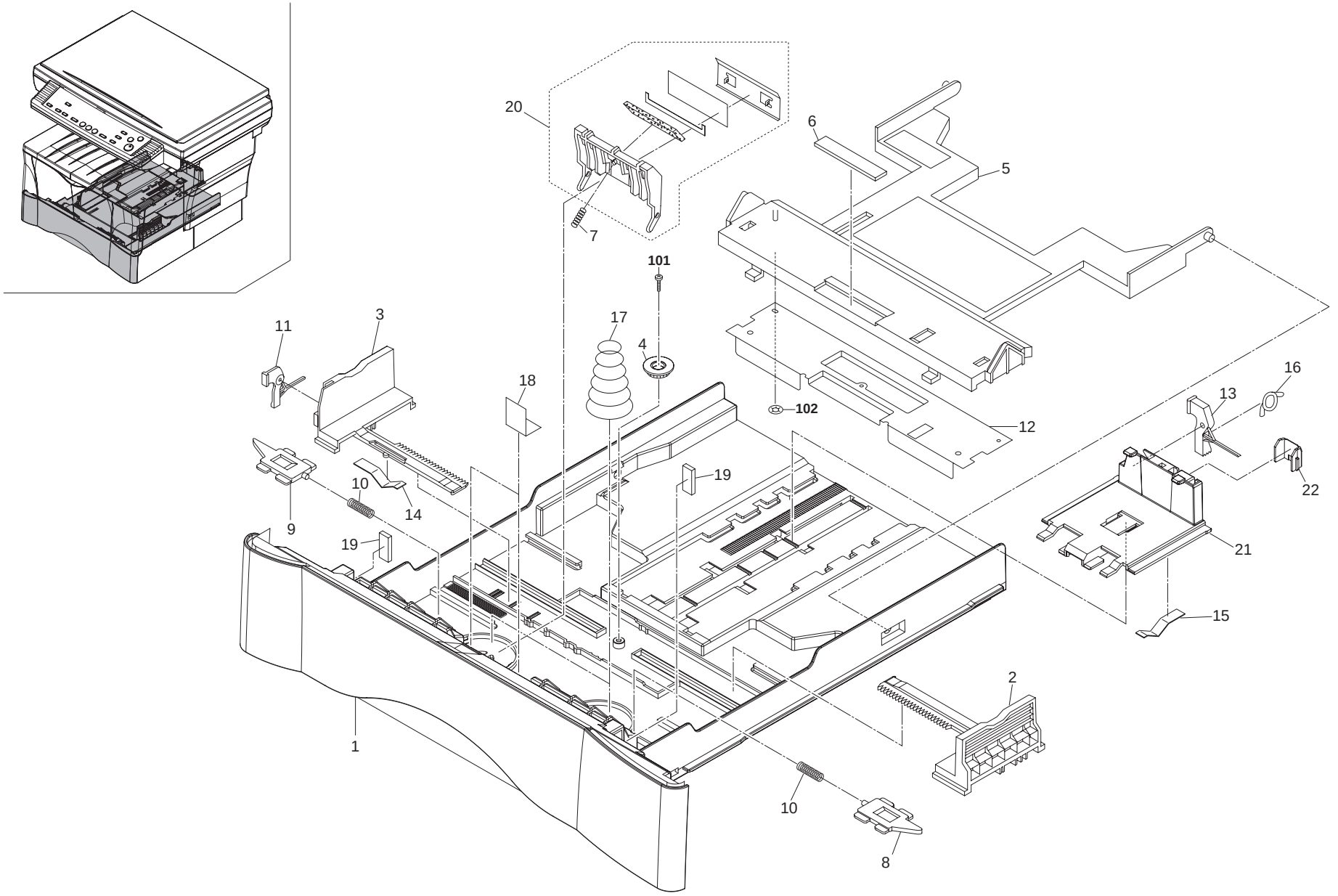
20
6
5
7
101
11
3
17
4
18
102
12
16
13
22
10
14
9
19
19
21
15
2
1
10
8

FIG. 7 Cassette

2GM-1

SP	Ref. No.	Part.No.	Alternative.	Description	Quantity 120	Quantity 220
⊙		302FM93103	2FM93103	CT-101(LTR) CASSETTE ASSY	1	1
	1	•5MVB886SH063	2A807010	BASE CASSETTE	1	1
	2	•2FM06020	5MVX765SH005	GUIDE SIDE R	1	1
	3	•2FM06010	5MVX765SH004	GUIDE SIDE L	1	1
⊙	4	•5MVG127DN071	2A807050	GEAR CASSETTE	1	1
	5	•5MVX882SH002	2A807060	BOTTOM CASSETTE	1	1
	6	•5MVS616XN001	2A807080	PAD BOTTOM	1	1
	7	•5MMW251LD047	2A807110	SPRING SEPARATOR C	1	1
	8	•5MVX431DW001	2A807121	LOCK CASSETTE R	1	1
	9	•5MVX431DW002	2A807131	LOCK CASSETTE L	1	1
	10	•5MMW251LD045	2A807140	SPRING LOCK	2	2
	11	•5MVX541DG003	2A807161	LEVER SIDE	1	1
	12	•302A807171	2A807171	PLATE BOTTOM	1	1
	13	•5MVX541DG002	2A807191	LEVER REAR	1	1
	14	•5MMP141LD002	2A807510	PLATE SIDE GUIDE	1	1
	15	•5MMP141LD003	2A807520	PLATE STOPPER	1	1
⊙	16	•5MMW171LD006	2A807530	SPRING STOPPER	1	1
	17	•5MMW552LD002	2A807540	SPRING CASSETTE	2	2
	18	•5MVL311KF003	2A807550	SHEET CASSETTE	2	2
	19	•5MVS315CN001	2A807910	SPACER CASSETTE	2	2
⊙	20	•2FM68320		SEPARATOR PAPER ASSY	1	1
⊙	21	•2DC07010		STOPPER PAPER	1	1
⊙	22	•2DC07020		POSITIONING FOLIO PAPER	1	1

SP	Ref. No.	Part.No.	Alternative.	Description	Quantity 120	Quantity 220
	101	7BB302306H	BB018460	+TP TAP-TITE B SCREW M3X6(CRFREE)		
	102	5MBCS4025XSP	D4000400	CS STOP RING		

• Parts with "•" are component parts or sub-assemblies of the assembly appearing immediately above them.

• Parts with "⊙" indicate the spare parts.

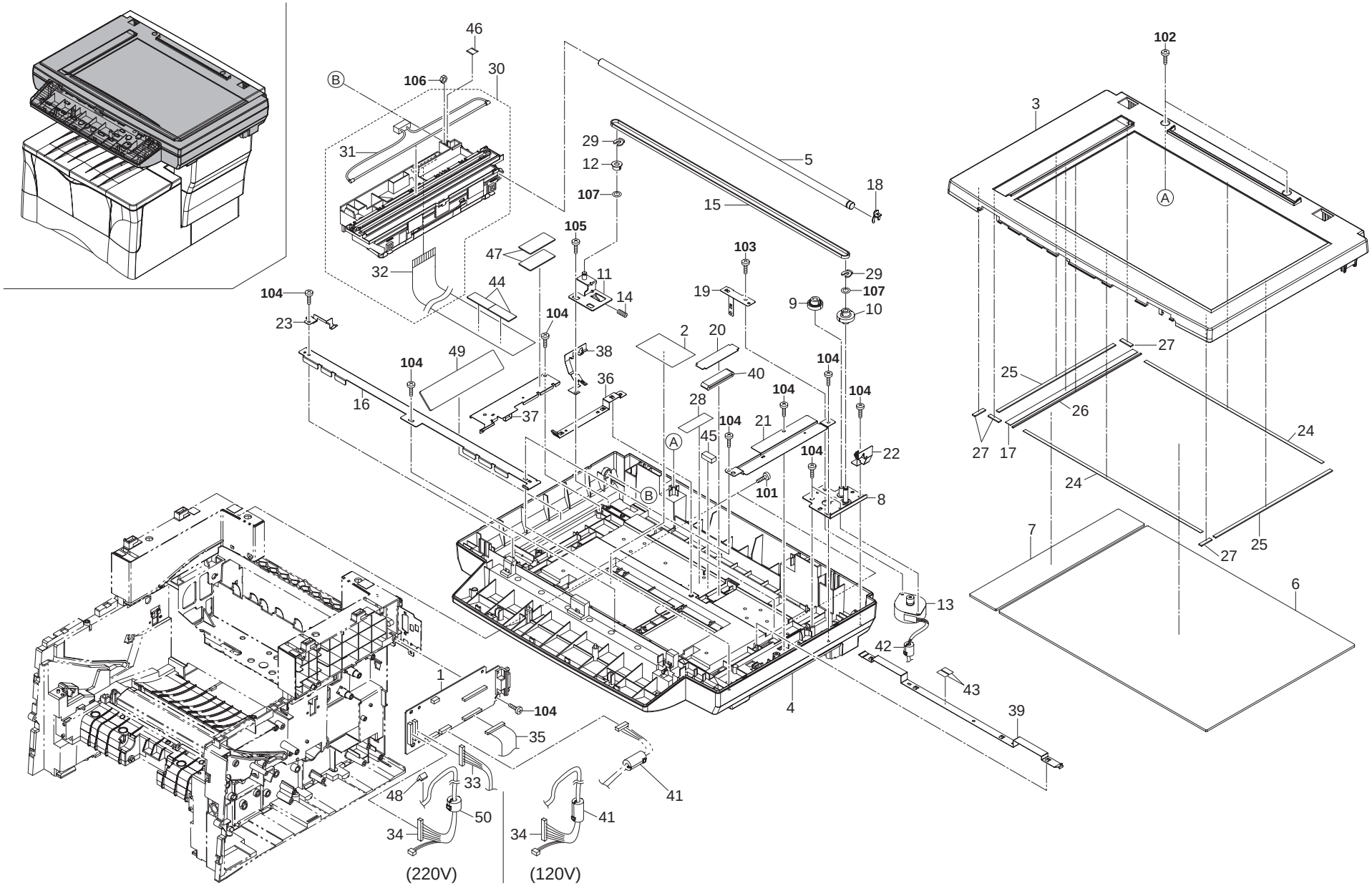
46
30
106
B
31
29
12
107
5
18
15
102
3
A
105
47
32
11
14
103
19
29
107
9
10
104
44
23
104
2
20
38
49
104
36
40
104
104
16
37
28
104
21
45
A
104
22
27
25
26
27
17
24
24
101
B
8
7
27
25
6
13
42
43
39
4
1
104
35
33
48
50
34
41
41
34
(220V)
(120V)

FIG. 8 Optical Section

2GM

SP	Ref. No.	Part.No.	Alternative.	Description	Quantity 120	Quantity 220
⊙	1	302GM01140	2GM01140	P.W.BOARD ASSY SCANNER	1	1
	2	2DC05010		LABEL CONTACT GLASS	1	1
	3	2DC12010		UPPER FRAME SCANNER(1/2)	1	1
	4	2DC12020		LOWER FRAME SCANNER(1/4)	1	1
	5	2DC12040		SHAFT SCANNER	1	1
⊙	6	2DC12050		CONTACT GLASS	1	1
⊙	7	2DC12060		CONTACT GLASS DF	1	1
	8	2DC12110		MOUNT SCANNER MOTOR	1	1
⊙	9	2DC12120		GEAR SCANNER 39/22	1	1
⊙	10	2DC12130		GEAR SCANNER 45/18	1	1
	11	2DC12140		MOUNT TENSION PULLEY	1	1
⊙	12	2DC12150		PULLEY TENSION	1	1
⊙	13	5SNSP0015031	2DC12160	MOTOR SCANNER	1	1
	14	2DC12170		SPRING TENSION	1	1
⊙	15	2DC12180		BELT SCANNER	1	1
	16	2DC12190		RAIL SCANNER	1	1
	17	2DC12210		STANDARD PLATE SHADING	1	1
⊙	18	2DC12280		STOPPER 8	1	1
	19	2DC12300		GROUND PLATE SCANNER	1	1
	20	2DC12310		HOLDER FFC	1	1
	21	2DC12330		PLATE EARTH SCANNER A	1	1
	22	2DC12340		PLATE EARTH SCANNER B	1	1
	23	2DC12350		PLATE EARTH SCANNER C	1	1
	24	2DC12360		TAPE CONTACT GLASS A	2	2
	25	2DC12370		TAPE CONTACT GLASS B	2	2
	26	2DC12380		TAPE CONTACT GLASS C	1	1
	27	2DC12390		TAPE CONTACT GLASS D	4	4
	28	2DC12400		TAPE FFC	2	2
⊙	29	5MVX111DN003	2A806250	RING STOPPER	2	2
⊙	30	302DD93011	2DD93011	PARTS, IMAGE SCANNER, SP	1	1
⊙	31	•2DC12200		LAMP SCANNER	1	1
	32	•2DD27091		CONN.CORD ASSY SCN-CCD	1	1
	33	2DD27040		CONN.CORD ASSY SCN-MAIN1	1	1
	34	2DD27050		CONN.CORD ASSY SCN-PANEL	1	1
	35	2DC27080		CONN.CORD ASSY SCANNER-MAIN2	1	1
	36	2DC12420		PLATE EARTH SCANNER D	1	1
	37	2DC12430		PLATE EARTH SCANNER E	1	1
	38	2DC12440		PLATE EARTH SCANNER F	1	1
	39	2DC12450		PLATE EARTH SCANNER G	1	1
	40	2DC27150		CORE FFC1	1	1
	41	2BL27650		CORE 6-18X34	2	1
	42	33927590		CORE 7-15X18	1	1
	43	2DC12460		SEAL EARTH PLATE	2	2
	44	2DD27160		SHEET EMI	2	2
	45	2DD27110		GASKET SHIELD 3X4X10	1	1
	46	2DC12480		LID ISU	1	1
	47	7ZGSTG335050H01	ZG020550	SHIELD GASKET	2	2
	48	7ZGSTGL10015H01	ZG019360	SHIELD GASKET		1
	49	7ZGSTG221135H01	ZG020870	SHIELD GASKET		1
	50	2A627940		CORE 10-20X10		1

SP	Ref. No.	Part.No.	Alternative.	Description	Quantity 120	Quantity 220
	101	B1B74100		+BIND T.T SCREW(+) / M4 X 10 CRFREE B-T		
	102	B1B73100		+BIND TAP-TITE B SCREW M3X10		
	103	5MBSP43006NW++R	B4A03060	+TP-A SCREW M3X06(TRIVALENT CHROMATING)		
	104	7BB300308H	BB018160	+BIND TAP-TITE B SCREW 3X8		
	105	7BB302308H	BB018120	+TP TAP-TITE B SCREW 3X08		
	106	7BC1004070++H01	BC018240	HEXA NUT M4		
	107	C2806130		POLY SLIDER M6.2X 13X.25T PA		

• Parts with "•" are component parts or sub-assemblies of the assembly appearing immediately above them.

• Parts with "⊙" indicate the spare parts.

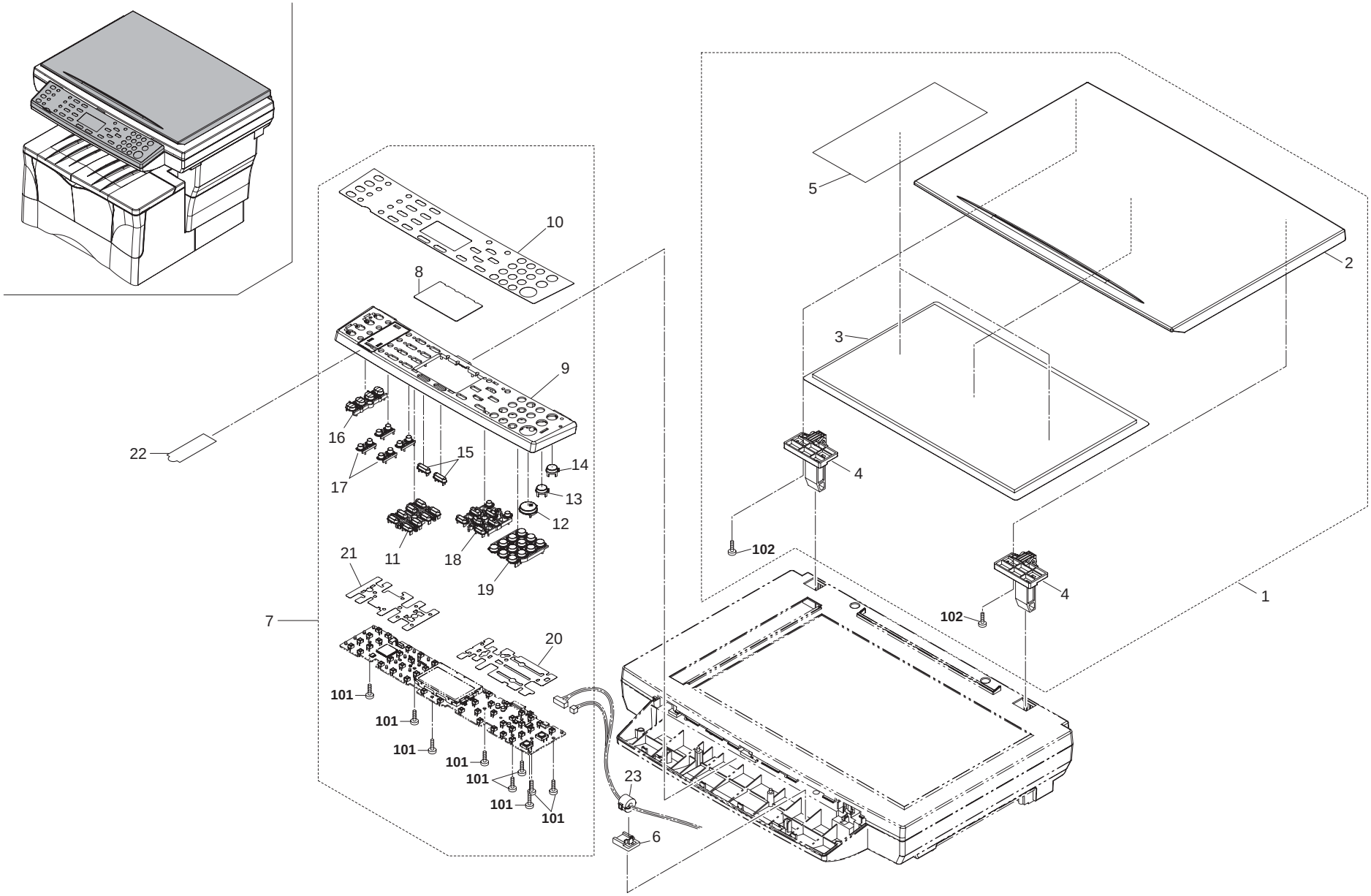
1
2
3
4
4
5
6
7
8
9
10
11
12
13
14
15
16
17
18
19
20
21
22
23
101
101
101
101
101
101
101
102
102

FIG. 9 Operation Unit & Original Holder

2GM

SP	Ref. No.	Part.No.	Alternative.	Description	Quantity 120	Quantity 220
⊙	1	302DC93112	2DC93112	PARTS,PLATEN COVER SP	1	1
⊙	2	•2DC11010		COVER ORIGINAL HOLDER(1/2)	1	1
⊙	3	•2DC11020		MAT ORIGINAL HOLDER	1	1
⊙	4	•2DC11060		HINGE ORIGINAL COVER	2	2
	5	•2DC11050		TAPE ORIGINAL HOLDER	2	2
	6	2DD27100		BINDING CORE	1	1
⊙	7	302GM93010	2GM93010	PARTS,OPE PANEL (E),SP	1	1
	8	•2DD25150		BARRIER LCD	1	1
⊙	9	•2DD25010		COVER OPERATION(1/2)	1	1
⊙	10	•302GM05010	2GM05010	SHEET OPERATION E	1	1
	11	•2DD25040		KEY FUNCTION	1	1
⊙	12	•2DC25052		KEY PRINT	1	1
⊙	13	•2DC25060		KEY STOP	1	1
⊙	14	•2DC25070		KEY RESET	1	1
	15	•2DD25050		KEY DECISION	2	2
	16	•2DD25060		KEY STATUS	1	1
	17	•2DD25070		KEY ONE TOUCH	4	4
	18	•2DD25080		KEY CONTROL	1	1
	19	•302GM05030	2GM05030	KEY OPERATION 10	1	1
	20	•302DD25131	2DD25131	RIGHT DUST SHIELD	1	1
	21	•2DD25140		LEFT DUST SHIELD	1	1
	22	2DD25190		SHEET ONE TOUCH	1	1
	23	3HK27050		CORE 8-16X10	1	1

SP	Ref. No.	Part.No.	Alternative.	Description	Quantity 120	Quantity 220
	101	7BB300308H	BB018160	+BIND TAP-TITE B SCREW 3X8		
	102	7BB302310H	BB018150	+TP TAP-TITE B SCREW 3X10		

• Parts with "•" are component parts or sub-assemblies of the assembly appearing immediately above them.

• Parts with "⊙" indicate the spare parts.

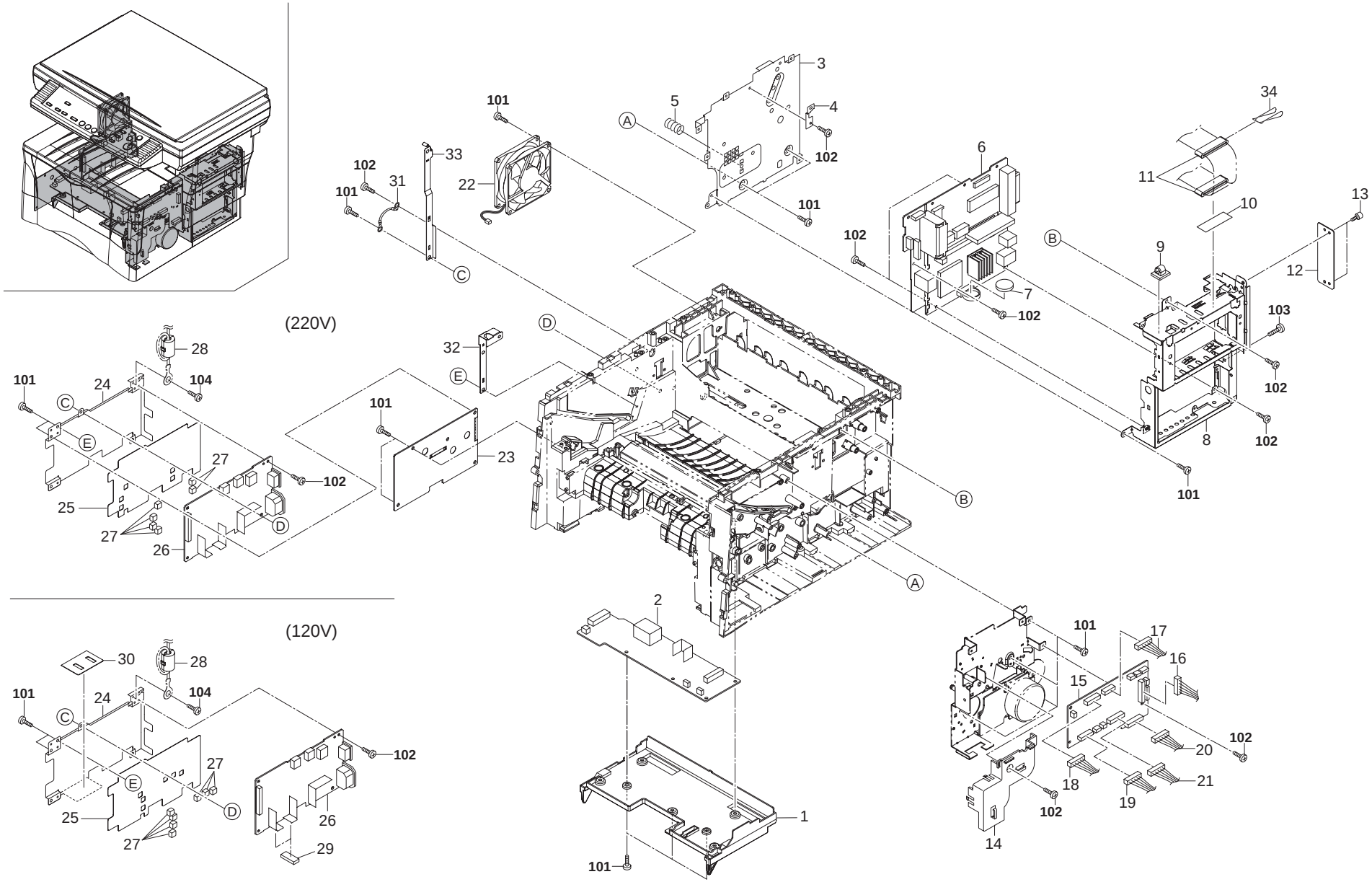
(220V)
(120V)
101
102
103
104
1
2
3
4
5
6
7
8
9
10
11
12
13
14
15
16
17
18
19
20
21
22
23
24
25
26
27
28
29
30
31
32
33
34
A
B
C
D
E

FIG. 10 Electrical Components

2GM

SP	Ref. No.	Part.No.	Alternative.	Description	Quantity 120	Quantity 220
	1	5MVB874CH002	2A802030	COVER PWB	1	1
⊙	2	302GM01150	2GM01150	P.W.BOARD ASSY BIAS	1	1
	3	5MMS775SL001	2A827010	PLATE CONTROLLER	1	1
	4	2DD02030		PLATE EARTH SHIELD	1	1
⊙	5	5MMW271LD010	2A822140	SPRING FREE	1	1
⊙	6	302GM01340	2GM01340	P.W.B ASSY MAIN CPY(SP)	1	1
	7	5FZBL003040++02	Y87H5010	BATTERY CR2032	1	1
	8	2DD26010		SHIELD CONTROLLER (1/3)	1	1
	9	M2105970		CLAMP,CKN-10(KITAGAWA)	1	1
	10	2DC26120		TAPE FFC M/S	1	1
	11	2DC27160		CORE FFC2	2	2
	12	2DD26070		PLATE OPTION	1	1
	13	5MMT263SN012++R	2D903100	SCREW OP	2	2
	14	5MVB663SB048	2A822200	COVER CORD	1	1
⊙	15	302GM01410	2GM01410	P.W.B ASSY ENGINE(SP)	1	1
	16	2DC27010		CONN.CORD ASSY ENGINE-MAIN	1	1
	17	2DC27020		CONN.CORD ASSY ENGINE-SCANNER1	1	1
	18	2DC27030		CONN.CORD ASSY ENGINE-SCANNER2	1	1
	19	2DC27110		CONN.CORD ASSY ENGINE-MMOT	1	1
	20	2DD27020		CONN.CORD ASSY ENG-BIASH	1	1
	21	2DD27030		CONN.CORD ASSY ENG-BIASY	1	1
⊙	22	2DC23010	5SNSP0015038	FAN COOLING	1	1
⊙	23	302DD28071	2DD28071	TRANS ASSY	1	1
	24	5MMX773SL001	2A827030	PLATE SW REG		1
	24	2DD26090		PLATE SW REG	1	
	25	2DD28140		SHEET SW REG E		1
	25	2DD28150		SHEET SW REG J	1	
⊙	26	302DD28041	2DD28041	P.W.BOARD ASSY MFPPS200		1
⊙	26	302DD28031	2DD28031	P.W.BOARD ASSY MFPPS100	1	
	27	2DD28120		SHEET RADIATOR C	7	6
	28	2BL27650		CORE 6-18X34	1	1
	29	2DD28100		SHEET RADIATOR A	2	
	30	2DD28160		SHEET SW REG J SUB	1	
	31	2DD27170		CONN.CORD ASSY EARTH FAX	1	1
	32	2DC26080		GROUND PLATE SR	1	1
	33	2DC02090		PLATE EARTH STAY L2	1	1
	34	7YZM390008++H01	YZ019370	ACCESS.CLAMP	1	1

SP	Ref. No.	Part.No.	Alternative.	Description	Quantity 120	Quantity 220
	101	B1B74100		+BIND T.T SCREW(+) / M4 X 10 CRFREE B-T		
	102	5MBTPB3006TW++R	B1A53060	+BIND TAP-TITE S SCREW M3X06		
	103	5MBSPP3006NW++R	B0B03060	PAN HEAD SCREW(+) / M3 X 6 CRFREE		
	104	5MBTPB4006TW++R	B1A54060	+BIND TAP-TITE S SCREW M4X06		

• Parts with "•" are component parts or sub-assemblies of the assembly appearing immediately above them.

• Parts with "⊙" indicate the spare parts.

Tools

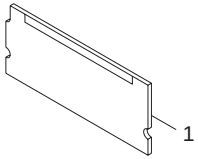

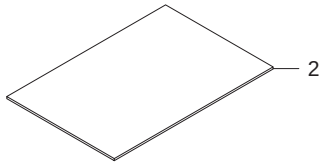

Supplied Parts

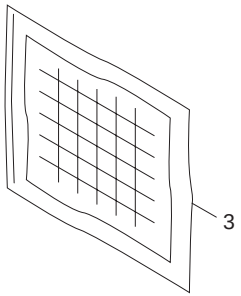

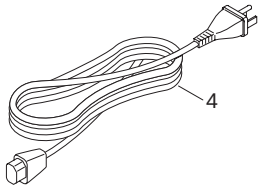

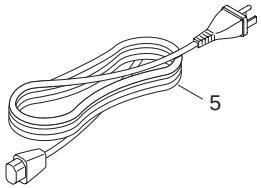

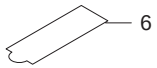

FIG. 11 Tools & Supplied Parts

SP	Ref. No.	Part.No.	Alternative.	Description	Quantity	
					120	220
⊙	1	302GM01210	2GM01210	P.W.BOARD ASSY DIMM	1	1
⊙	2	2A668011		SPECIAL TOOL,SCANNER ADJUSTMENT ORIGINAL	1	1
	3	5AAMDK5P++01	4AK85040	CLEANING KIT C	1	1
	4	2DC27410		AC CORD 120 ASSY	1	
	5	2BJ27300	5AACAC488ECA++P	POWER CORD 230(ARG)		1
	6	2DD25190		SHEET ONE TOUCH	4	4

• Parts with "•" are component parts or sub-assemblies of the assembly appearing immediately above them.

• Parts with "⊙" indicate the spare parts.

SP	Part.No.	Alternative.	Description	Fig.No.
	2A627940		CORE 10-20X10	2,3,8
⊙	2A668011		SPECIAL TOOL,SCANNER ADJUSTMENT ORIGINAL	11
	2BJ27300	5AACAC488ECA++P	POWER CORD 230(ARG)	11
	2BL27650		CORE 6-18X34	8,10
	2BY02010	5MMX632LD008	CONTACT MAIN MR	2
	2BY06040	5MMW261LD057	SPRING ACTUATOR REG	2
	2BY20060	5MML531CG001	HOLDER LAMP A	6
	2BY20070	5MVX221XN004	BUSH PRESS	6
	2BY27560	5AACCNSH3GEA	CONN. CORD ASSY	6
	2BY27570	5AACCNSH4GEA	CONN. CORD ASSY	6
	2DC02010		FRAME BASE (1/8)	2
	2DC02020		STAY SCANNER LEFT	2
	2DC02030		STAY SCANNER RIGHT	2
	2DC02040		FRAME MIDDLE (1/3)	2
	2DC02050		MOUNT SCANNER PCB	2
	2DC02060		PLATE EARTH STAY L	2
	2DC02090		PLATE EARTH STAY L2	10
	2DC02100		FILM PS LOW	2
	2DC04030		COVER REAR	1
	2DC04090		PLATE SHIELD	1
	2DC05010		LABEL CONTACT GLASS	8
	2DC05070		LABEL FRONT COVER	1
	2DC05090		LABEL MPF COVER	3
⊙	2DC06010	5SNSP0015035	CLUTCH FEED	2
	2DC06020		GUIDE TURN A	3
	2DC06080		SHEET MPF PAD	3
⊙	2DC07010		STOPPER PAPER	7
⊙	2DC07020		POSITIONING FOLIO PAPER	7
⊙	2DC11010		COVER ORIGINAL HOLDER(1/2)	9
⊙	2DC11020		MAT ORIGINAL HOLDER	9
	2DC11050		TAPE ORIGINAL HOLDER	9
⊙	2DC11060		HINGE ORIGINAL COVER	9
	2DC12010		UPPER FRAME SCANNER(1/2)	8
	2DC12020		LOWER FRAME SCANNER(1/4)	8
	2DC12040		SHAFT SCANNER	8
⊙	2DC12050		CONTACT GLASS	8
⊙	2DC12060		CONTACT GLASS DF	8
	2DC12110		MOUNT SCANNER MOTOR	8
⊙	2DC12120		GEAR SCANNER 39/22	8
⊙	2DC12130		GEAR SCANNER 45/18	8
	2DC12140		MOUNT TENSION PULLEY	8
⊙	2DC12150		PULLEY TENSION	8
	2DC12170		SPRING TENSION	8
⊙	2DC12180		BELT SCANNER	8
	2DC12190		RAIL SCANNER	8
⊙	2DC12200		LAMP SCANNER	8
	2DC12210		STANDARD PLATE SHADING	8
⊙	2DC12280		STOPPER 8	8
	2DC12300		GROUND PLATE SCANNER	8
	2DC12310		HOLDER FFC	8

SP	Part.No.	Alternative.	Description	Fig.No.
	2DC12330		PLATE EARTH SCANNER A	8
	2DC12340		PLATE EARTH SCANNER B	8
	2DC12350		PLATE EARTH SCANNER C	8
	2DC12360		TAPE CONTACT GLASS A	8
	2DC12370		TAPE CONTACT GLASS B	8
	2DC12380		TAPE CONTACT GLASS C	8
	2DC12390		TAPE CONTACT GLASS D	8
	2DC12400		TAPE FFC	8
	2DC12420		PLATE EARTH SCANNER D	8
	2DC12430		PLATE EARTH SCANNER E	8
	2DC12440		PLATE EARTH SCANNER F	8
	2DC12450		PLATE EARTH SCANNER G	8
	2DC12460		SEAL EARTH PLATE	8
	2DC12480		LID ISU	8
	2DC13020		SHUTTER LSU	3
	2DC13030		MIRROR LSU	3
	2DC13040		SPRING FULL SENSOR	3
	2DC16030		PLATE EARTH BRUSH A	2
	2DC16040		SPRING TC R	2
	2DC16050		SPACER TRANSFER	3
	2DC20010		SPRING PRESS ROLLER	6
	2DC20040		FRAME FUSER LOW (1/2)	6
⊙	2DC20050	5SNSP0015041	THERMISTOR FUSER	6
	2DC20060		ROLLER PRESS	6
	2DC22020		MOUNT MACHINE DRIVE	4
⊙	2DC22030		GEAR 48/21	4
⊙	2DC23010	5SNSP0015038	FAN COOLING	10
⊙	2DC25052		KEY PRINT	9
⊙	2DC25060		KEY STOP	9
⊙	2DC25070		KEY RESET	9
	2DC26070		SHIELD LSU	3
	2DC26080		GROUND PLATE SR	10
	2DC26100		CONTACT TRANSFER	2
	2DC26110		PLATE EARTH LSU	3
	2DC26120		TAPE FFC M/S	10
	2DC27010		CONN.CORD ASSY ENGINE-MAIN	10
	2DC27020		CONN.CORD ASSY ENGINE-SCANNER1	10
	2DC27030		CONN.CORD ASSY ENGINE-SCANNER2	10
	2DC27070		WIRE MAIN-LSU	3
	2DC27080		CONN.CORD ASSY SCANNER-MAIN2	8
	2DC27110		CONN.CORD ASSY ENGINE-MMOT	10
	2DC27140		WIRE ENGINE-LSU	3
	2DC27150		CORE FFC1	8
	2DC27160		CORE FFC2	10
	2DC27410		AC CORD 120 ASSY	11
	2DD02010		PLATE EARTH CONTROLLER	2
	2DD02020		PLATE EARTH SW	2
	2DD02030		PLATE EARTH SHIELD	10
⊙	2DD25010		COVER OPERATION(1/2)	9
	2DD25040		KEY FUNCTION	9

• Parts with "⊙" indicate the spare parts.

SP	Part.No.	Alternative.	Description	Fig.No.
	2DD25050		KEY DECISION	9
	2DD25060		KEY STATUS	9
	2DD25070		KEY ONE TOUCH	9
	2DD25080		KEY CONTROL	9
	2DD25140		LEFT DUST SHIELD	9
	2DD25150		BARRIER LCD	9
	2DD25190		SHEET ONE TOUCH	9,11
	2DD26010		SHIELD CONTROLLER (1/3)	10
	2DD26020		LID CONTROLLER L	1
	2DD26040		HOLDER SPEAKER	1
	2DD26070		PLATE OPTION	10
	2DD26080		MOUNT SARCON MAIN	1
	2DD26090		PLATE SW REG	10
	2DD26100		SHEET MAIN PCB	1
	2DD27020		CONN.CORD ASSY ENG-BIASH	10
	2DD27030		CONN.CORD ASSY ENG-BIASY	10
	2DD27040		CONN.CORD ASSY SCN-MAIN1	8
	2DD27050		CONN.CORD ASSY SCN-PANEL	8
	2DD27091		CONN.CORD ASSY SCN-CCD	8
	2DD27100		BINDING CORE	9
	2DD27110		GASKET SHIELD 3X4X10	8
	2DD27160		SHEET EMI	1,8
	2DD27170		CONN.CORD ASSY EARTH FAX	10
	2DD28100		SHEET RADIATOR A	10
	2DD28120		SHEET RADIATOR C	1,10
	2DD28140		SHEET SW REG E	10
	2DD28150		SHEET SW REG J	10
	2DD28160		SHEET SW REG J SUB	10
	2FM02710	5MVS422KF010	SPACER PAD	3
	2FM06010	5MVX765SH004	GUIDE SIDE L	7
	2FM06020	5MVX765SH005	GUIDE SIDE R	7
	2FM06030	5MMW261LD065	SPRING BOTTOM MPF	3
⊙	2FM14070	5MMT876SN103	ROLLER TRANSFER I	2
⊙	2FM68320		SEPARATOR PAPER ASSY	7
⊙	2FM93093		PU-102 PROCESS UNIT	5
	302A807171	2A807171	PLATE BOTTOM	7
⊙	302A820161	2A820161	GEAR HEAT Z33	6
⊙	302DC20021	2DC20021	HEATER 230 FIXING	6
⊙	302DC20031	2DC20031	HEATER 120 FIXING	6
⊙	302DC22011	2DC22011	MOTOR MAIN	4
⊙	302DC93052	2DC93052	FK-100 FUSER UNIT (E) SP	6
⊙	302DC93062	2DC93062	FK-100 FUSER UNIT (U) SP	6
⊙	302DC93084	2DC93084	PARTS,DRIVE UNIT SP	4
⊙	302DC93112	2DC93112	PARTS,PLATEN COVER SP	9
⊙	302DD04021	2DD04021	LID TOP	1
	302DD25131	2DD25131	RIGHT DUST SHIELD	9
⊙	302DD28031	2DD28031	P.W.BOARD ASSY MFPPS100	10
⊙	302DD28041	2DD28041	P.W.BOARD ASSY MFPPS200	10
⊙	302DD28071	2DD28071	TRANS ASSY	10
⊙	302DD93011	2DD93011	PARTS, IMAGE SCANNER, SP	8

SP	Part.No.	Alternative.	Description	Fig.No.
⊙	302FM93103	2FM93103	CT-101(LTR) CASSETTE ASSY	7
⊙	302FM93111	2FM93111	LK-101	3
⊙	302GM01140	2GM01140	P.W.BOARD ASSY SCANNER	8
⊙	302GM01150	2GM01150	P.W.BOARD ASSY BIAS	10
⊙	302GM01180	2GM01180	P.W.BOARD ASSY LED	3
⊙	302GM01190	2GM01190	FULL SENSOR ASSY	3
⊙	302GM01200	2GM01200	TE SENSOR ASSY	3
⊙	302GM01210	2GM01210	P.W.BOARD ASSY DIMM	11
⊙	302GM01340	2GM01340	P.W.B ASSY MAIN CPY(SP)	10
⊙	302GM01410	2GM01410	P.W.B ASSY ENGINE(SP)	10
⊙	302GM04040	2GM04040	COVER FRONT(CPY)	1
⊙	302GM04050	2GM04050	COVER FRONT LA(CPY)	1
⊙	302GM05010	2GM05010	SHEET OPERATION E	9
	302GM05030	2GM05030	KEY OPERATION 10	9
	302GM17010	2GM17010	RETAINING PIN MIRROR FRAME	1
⊙	302GM44010	2GM44010	SOLENOID FEED	4
⊙	302GM44020	2GM44020	SOLENOID REGIST	4
⊙	302GM44030	2GM44030	SOLENOID MPF	4
⊙	302GM93010	2GM93010	PARTS,OPE PANEL (E),SP	9
	33927590		CORE 7-15X18	8
	3DB27160		SPEAKER(PBF)	1
	3HK27050		CORE 8-16X10	9
	5AACCNRM0GEA	2A827580	CONN. CORD ASSY	3
	5AACCNRM1GEA	2A827590	CONN. CORD ASSY	4
	5AAMDK5P++01	4AK85040	CLEANING KIT C	11
⊙	5AAVCLTCH016	2A806120	CLUTCH REGIST	2
⊙	5AAVCLTCH031	2FM06040	CLUTCH MPF	2
⊙	5AAVR0LL+044	2A806010	ROLLER FEED ASSY	2
⊙	5AAVR0LL+045	2A806510	ROLLER MPF ASSY	3
	5AAVSEPRT015	2A820360	SEPARATOR ASSY	6
⊙	5AAY3010E+31	2A868610	EARTH GUIDE ASSY	2
⊙	5AAY3010E+58	2A868700	COVER REAR ASSY	3
⊙	5EYFFQ16001++01	2BY20020	THERMOSTAT 250V160 C	6
⊙	5FNXGP1A73A++02	2DC27180	PT.SENSOR GP1A73AJ00	3
	5FZBL003040++02	Y87H5010	BATTERY CR2032	10
	5MML211RD002	2A820220	HOLDER LAMP B	6
	5MMP141LD002	2A807510	PLATE SIDE GUIDE	7
	5MMP141LD003	2A807520	PLATE STOPPER	7
	5MMS111SL002	2BY20050	NUT FUSER A	6
	5MMS775SL001	2A827010	PLATE CONTROLLER	10
	5MMT263SN012++R	2D903100	SCREW OP	1,10
⊙	5MMT364SN003	2A822130	PIN DRIVE	2
	5MMT365SN003	2A815020	PIN CONTACT BIAS	2
	5MMT766SN007	2A806020	SHAFT FEED	2
	5MMT766SN008	2A806530	SHAFT MPF	3
⊙	5MMT774SN001	2A820080	ROLLER EXIT LOW	6
⊙	5MMT865SN010	2A806050	ROLLER REGIST UP	2
⊙	5MMT874SN007	2A820090	ROLLER EXIT UP	2
⊙	5MMT876AX002	2BY20010	ROLLER HEAT	6
⊙	5MMT876SN073	2A806040	ROLLER REGIST LOW	2

• Parts with "⊙" indicate the spare parts.

SP	Part.No.	Alternative.	Description	Fig.No.
⊙	5MMW171LD006	2A807530	SPRING STOPPER	7
	5MMW251LD043	2A816040	SPRING TC L	2
	5MMW251LD045	2A807140	SPRING LOCK	7
	5MMW251LD047	2A807110	SPRING SEPARATOR C	7
	5MMW261LD017	2A820520	SPRING ACTUATOR	6
	5MMW261LD023	2A806410	SPRING REGIST R	2
	5MMW261LD036	2A814570	SPRING TE SENSOR	3
	5MMW261LD038	2A806570	SPRING SEPA MPF	3
	5MMW261LD055	2A820350	SPRING SEPARATOR	6
⊙	5MMW271LD010	2A822140	SPRING FREE	10
	5MMW341LD005	2A802070	SPRING PIN CASSETTE	2
	5MMW341LD006	2A813050	SPRING SHUTTER LSU	3
	5MMW351LD006	2A802060	SPRING INTERLOCK	2
	5MMW361LD015	2A815010	SPRING PIN BIAS	2
	5MMW552LD002	2A807540	SPRING CASSETTE	7
	5MMW601LD011	2A820260	SPRING PULLEY	6
	5MMX221LD024	2A813030	SPRING MIRROR	3
	5MMX322LD022	2A820340	PLATE TRAY	3
	5MMX332LD013	2A806750	PLATE EARTH MPF	4
	5MMX332LD021	2A820850	BKT PULLEY FD	3
	5MMX521LD005	2A822150	PLATE EARTH DRUM	4
	5MMX532LD005	2A806210	CONTACT EARTH REG	2
	5MMX665LD004	2A820280	PLATE EARTH FUSER	6
	5MMX773SL001	2A827030	PLATE SW REG	10
	5MVB663SB048	2A822200	COVER CORD	10
	5MVB863KB003	2A820023	FRAME FUSER UP	6
	5MVB872SH019	2A806661	BASE MPF	3
	5MVB874CH002	2A802030	COVER PWB	10
⊙	5MVB874SH018	2A820950	COVER REAR	3
	5MVB874SH019	2A820961	TRAY EXIT FU	3
	5MVB886SH063	2A807010	BASE CASSETTE	7
⊙	5MVG126DB025	2A806240	GEAR REGIST Z13	2
⊙	5MVG127DB047	2A806230	GEAR REGIST Z20	2
⊙	5MVG127DB048	2A816060	GEAR TC Z18	2
⊙	5MVG127DN070	2A820190	GEAR IDLE Z18	6
⊙	5MVG127DN071	2A807050	GEAR CASSETTE	7
⊙	5MVG137DN029	2A822180	GEAR Z21H	4
⊙	5MVG137DN030	2A820290	GEAR EXIT Z23 UP	2
⊙	5MVG137DN031	2A820170	GEAR EXIT Z23	6
	5MVG137DN032	2A806720	GEAR MPF	3
⊙	5MVG138DN041	2A822100	GEAR FREE Z25S	2
⊙	5MVG138DN042	2A822170	GEAR Z24H	4
⊙	5MVG148DN044	2A822050	GEAR Z40H	4
⊙	5MVG148DN045	2A822080	GEAR Z38H	2
⊙	5MVG148DN046	2A822090	GEAR FREE Z40H	2
⊙	5MVG148DN047	2A822110	GEAR Z34S	2
⊙	5MVG148DN048	2A822120	GEAR Z40S	2
⊙	5MVG148DN049	2A822160	GEAR Z37S	2
⊙	5MVG148DN050	2A822190	GEAR Z36H-Z21H	4
⊙	5MVG148XN009	2A820180	GEAR IDLE Z34	6

SP	Part.No.	Alternative.	Description	Fig.No.
⊙	5MVG168DN017	2A822030	GEAR Z68H-Z21H	4
⊙	5MVG169DN032	2A822060	GEAR Z95H-Z21H	4
⊙	5MVG169DN033	2A822070	GEAR Z53H	4
	5MVL311KF003	2A807550	SHEET CASSETTE	7
	5MVM161DW001	2A806260	BUSH PULLEY FEED	2
	5MVM176DN026	2A806030	BUSH FEED	2,3
	5MVM176DW001	2A821010	BUSH EXIT	2
	5MVM188XN015	2A820120	BUSH HEAT R	6
	5MVM188XN016	2A820131	BUSH HEAT L	6
⊙	5MVM273DB005	2A820100	PULLEY EXIT	3,6
	5MVS217SN002	2A806280	PAD SOLENOID	4
	5MVS222KN006	2A820970	SHEET REAR	3
	5MVS222KW001	2A820980	SHEET REAR B	3
	5MVS228RB019	2A802500	FOOT	3
	5MVS312KF011	2A806480	SHEET GUIDE	3
	5MVS315CN001	2A807910	SPACER CASSETTE	7
	5MVS416XN001	2A806560	PAD SEPARATOR MPF	3
	5MVS431TX001	2A806760	TAPE SEPARATOR	3
	5MVS441KF008	2A806170	SHEET REGIST SW	2
	5MVS616XN001	2A807080	PAD BOTTOM	7
	5MVS616XN002	2A806680	PAD BOTTOM MPF	3
	5MVS622KF011	2BY06050	SHEET REGIST R	2
	5MVS622KF012	2BY06060	SHEET REGIST L	2
	5MVT653DW001	2A802050	PIN CASSETTE	2
⊙	5MVT676DB002	2A806220	PULLEY FEED	2
	5MVVL661WN34	2A805010	LABEL LASER CAUTION	3
	5MVVL731WN14	2A805020	LABEL FUSER CAUTION	6
⊙	5MVX111DN003	2A806250	RING STOPPER	2,3,8
	5MVX211DB016	2A820110	BUSH EXIT	6
	5MVX221DB019	2A806420	BUSH REGIST LEFT	2
⊙	5MVX221DB023	2A816020	BUSH TC L	2
	5MVX221DN014	2A806620	CAM MPF R	3
	5MVX221DW006	2A806430	BUSH REGIST RIGHT	2
⊙	5MVX221DW008	2A816030	BUSH TC R	2
	5MVX322SB020	2A820300	ACTUATOR FUSER B	2
	5MVX422DN005	2A804080	HINGE FRONT L	1
	5MVX422DN006	2A804090	HINGE FRONT R	1
	5MVX431DW001	2A807121	LOCK CASSETTE R	7
	5MVX431DW002	2A807131	LOCK CASSETTE L	7
⊙	5MVX432DB009	2A806090	ACTUATOR REGIST	2
	5MVX432DB010	2A806600	ACTUATOR MPF	3
	5MVX522DB004	2A806550	SEPARATOR MPF	3
	5MVX541DG002	2A807191	LEVER REAR	7
	5MVX541DG003	2A807161	LEVER SIDE	7
⊙	5MVX542DB003	2A806100	ACTUATOR PE	2
	5MVX721DN001	2A802040	LEVER INTERLOCK	2
	5MVX731CB002	2A820200	ACTUATOR FUSER A	6
	5MVX751SH001	2A806740	TRAY MPF B	3
	5MVX752SH002	2A806700	GUIDE MPF R	3
	5MVX752SH003	2A806710	GUIDE MPF L	3

• Parts with "⊙" indicate the spare parts.

SP	Part.No.	Alternative.	Description	Fig.No.
	5MVX852CB003	2A806670	BOTTOM PLATE MPF	3
	5MVX854SH002	2A806520	HOLDER MP FEED	3
⊙	5MVX861SH004	2A806730	TRAY MPF A	3
⊙	5MVX882SH002	2A807060	BOTTOM CASSETTE	7
⊙	5PLPWCTAPKX	2FM93120	MC-41 MCH ASSY	5
⊙	5SNSA2DC++13	2DC93102	PARTS,MPF COVER SP	3
⊙	5SNSP0015024	2DC04020	COVER LEFT	1
⊙	5SNSP0015025	2DC04040	COVER MFP	3
⊙	5SNSP0015026	2DC04050	COVER DIMM	1
⊙	5SNSP0015027	2DC04060	COVER RIGHT	1
	5SNSP0015030	2DC04080	COVER TOP	1
	5SNSP0015031	2DC12160	MOTOR SCANNER	8
	7BB300306H	BB018140	+BIND TAP-TITE B SCREW 3X6	3
	7YZM390008++H01	YZ019370	ACCESS.CLAMP	10
	7ZGSTG221135H01	ZG020870	SHIELD GASKET	8
	7ZGSTG335050H01	ZG020550	SHIELD GASKET	8
	7ZGSTGL10015H01	ZG019360	SHIELD GASKET	1,2,8
	M2105970		CLAMP,CKN-10(KITAGAWA)	10
	M2108800		SPACER,KGPS-3.5S(KITAGAWA)	4

• Parts with "⊙" indicate the spare parts.

KYOCERA MITA AMERICA, INC.

Headquarters:
225 Sand Road,
Fairfield, New Jersey 07004-0008
TEL : (973) 808-8444
FAX : (973) 882-6000

Midwestern Region:
201 Hansen Court Suite 119
Wood Dale, Illinois 60191
TEL : (630) 238-9982
FAX : (630) 238-9487

Southwestern Region:
2825 West Story Road,
Irving, Texas 75038-5299
TEL : (972) 550-8987
FAX : (972) 252-9786

New York Branch:
1410 Broadway 23rd floor
New York, NY 10018
TEL : (917) 286-5400
FAX : (917) 286-5402

Western Region:
14101 Alton Parkway,
Irvine, California 92618-7006
TEL : (949) 457-9000
FAX : (949) 457-9119

National Operation Center
& National Training Center:
2825 West Story Road,
Irving, Texas 75038-5299
TEL : (972) 659-0055
FAX : (972) 570-5816

Northeastern Region:
225 Sand Road,
Fairfield, New Jersey 07004-0008
TEL : (973) 808-8444
FAX : (973) 882-4401

Southeastern Region:
1500 Oakbrook Drive,
Norcross, Georgia 30093
TEL : (770) 729-9786
FAX : (770) 729-9873

Latin America Division:
8240 N.W. 52nd. Terrace Dawson Building,
Suite 108 Miami, Florida 33166
TEL : (305) 421-6640
FAX : (305) 421-6666

KYOCERA MITA CANADA, LTD.

6120 Kestrel Road, Mississauga,
Ontario L5T 1S8, Canada
TEL : (905) 670-4425
FAX : (905) 670-8116

KYOCERA MITA MEXICO, S.A. DE C.V.

Av. 16 de Septiembre #407
Col. Santa Inés,
Azcapotzalco México,
D.F. 02130, México
TEL : (55) 5383-2741
FAX : (55) 5383-7804

©2006 KYOCERA MITA Corporation
http://www.kyoceramita.com