KYOCERA

KM-5035
KM-4035
KM-3035

PARTS LIST

Published in June 2005
842FG123
Version 4.0

NOTES

1.Indicate parts number and machine model when placing an order.

e.g. Parts Number	Parts Name	Machine Model	Cycle	Quantity
2FG04010	RIGHT FRONT COVER (KM-5035)	KM-5035	50Hz	1
2FF04010	RIGHT FRONT COVER (KM-4035)	KM-4035	50Hz	1
2FD04010	RIGHT FRONT COVER (KM-3035)	KM-3035	50Hz	1

2.Service calls and freight will be charged separately.

3.Symbols in the "Parts Number" column.

- Parts with "'⊙" indicates the spare parts and the parts without "⊙'" can not be supplied.

- Parts with "•" are component parts or sub-assemblies of the assembly appearing immediately above them.

e.g. Parts Number	Parts Name	Parts Number	Parts Name
2FG93080	PARTS,VERTICAL FEED ASS'Y,SP	•2BL06220	EARTH VERTICAL FEED
		•2FG06010	FRAME VERTICAL FEED A

- Parts with "• •" are component parts or sub-assembly with "•" appearing immediately above them.

e.g. Parts Number	Parts Name	Parts Number	Parts Name
•2BJ60500	WING TRAY ASS'Y	••2BJ60510	MOUNT WING TRAY
		••2BJ60520	UPPER WING TRAY

4.See the last page of this parts list for the classification of the screws in the illustrations.

5.Items indicated in Description column as (OPTION) are supply parts and should be ordered through your Regional Office.

Parts List

KM-5035
KM-4035
KM-3035

CONTENTS

FIG. 1 EXTERIOR COVERS 2
FIG. 2 FRAMES 4
FIG. 3 CASSETTE 6
FIG. 4 PAPER FEED-IN SECTION I 8
FIG. 5 PAPER FEED-IN SECTION II 10
FIG. 6 PAPER FEED-IN SECTION III 14
FIG. 7 PAPER CONVEYING SECTION 16
FIG. 8 PAPER EXIT SECTION 18
FIG. 9 OPTICAL SECTION 20
FIG. 10 BYPASS UNIT 24
FIG. 11 BYPASS FEED UNIT 26
FIG. 12 LASER SCANNER UNIT 28
FIG. 13 DEVELOPING SECTION 30
FIG. 14 FIXING SECTION 32
FIG. 15 CLEANING SECTION 34
FIG. 16 DRIVING, COOLING SECTION I 36
FIG. 17 DRIVING, COOLING SECTION II 38
FIG. 18 ELECTRICAL COMPONENTS 40
FIG. 19 OPERATION UNIT 44
FIG. 20 OPTION (ORIGINAL HOLDER) 46
FIG. 21 OPTION I 48
FIG. 22 OPTION II & TOOL 50

• INDEX 52

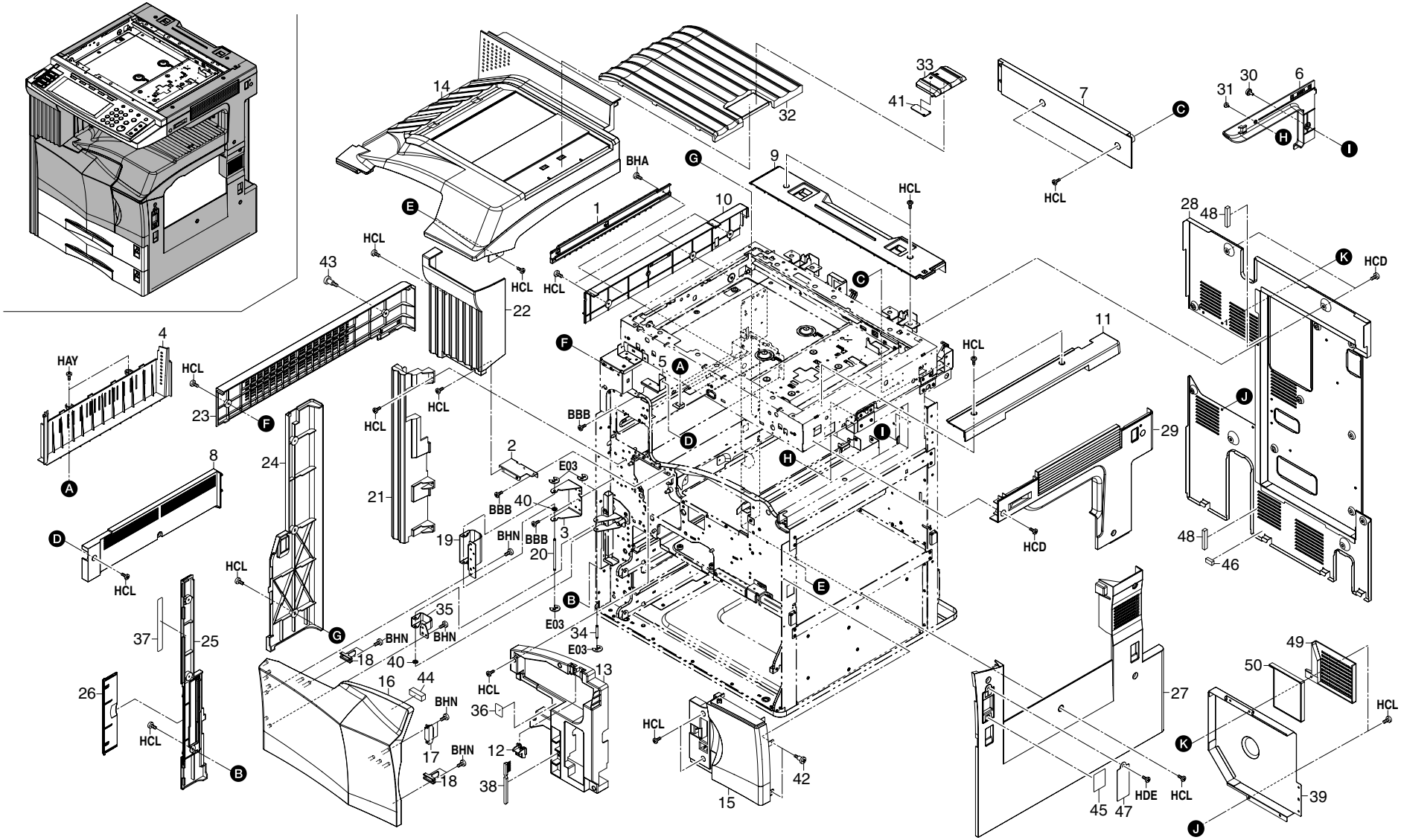
1
2
3
4
5
6
7
8
9
10
11
12
13
14
15
16
17
18
19
20
21
22
23
24
25
26
27
28
29
30
31
32
33
34
35
36
37
38
39
40
41
42
43
44
45
46
47
48
49
50
HAY
HCL
BHA
BBB
E03
BHN
HDE
HCD

FIG. 1 EXTERIOR COVERS

SP	Ref.No.	Part.No.	Alternative.	Description	Quantity			
					110V	120V	230V	240V
⊙	1	2BL21350		GUIDE DU FEED R	1	1	1	1
⊙	2	2FG02010		MOUNT TRAY EJECT	1	1	1	1
	3	2BL04220		MOUNT HINGE	1	1	1	1
⊙	4	2BL04100		COVER EXIT LOW	1	1	1	1
	5	2BJ04150		MOUNT LEFT FRONT COVER	1	1	1	1
⊙	6	2BJ04051		RIGHT COVER TRAY	1	1	1	1
⊙	7	2BJ04031		REAR COVER TRAY	1	1	1	1
⊙	8	2BJ04041		UPPER EJECT COVER	1	1	1	1
⊙	9	2AV04101		REAR COVER SCANNER	1	1	1	1
⊙	10	2BJ04061		UPPER LEFT COVER A	1	1	1	1
⊙	11	2BJ04081		UPPER RIGHT COVER A	1	1	1	1
	12	2BL04200		LEVER CONT RELEASE	1	1	1	1
	13	2BL04090		INNER RIGHT COVER	1	1	1	1
⊙	14	2BL04040		TRAY EJECT	1	1	1	1
⊙	15	2FG04010		RIGHT FRONT COVER (KM-5035)	1	1	1	1
⊙	15	2FF04010		RIGHT FRONT COVER (KM-4035)	1	1	1	1
⊙	15	2FD04010		RIGHT FRONT COVER (KM-3035)	1	1	1	1
⊙	16	2BJ04600		FRONT COVER MIDDLE K	1	1	1	1
	17	60804120		MAGNET CATCH	1	1	1	1
⊙	18	2BL04330		HOLDER SWITCH	2	2	2	2
	19	2BL04350		FRONT HINGE COVER P	1	1	1	1
	20	2BL04190		PIN COVER HINGE	1	1	1	1
⊙	21	2BL04150		LEFT COVER CASSETTE	1	1	1	1
⊙	22	2BJ04011		LEFT FRONT COVER	1	1	1	1
⊙	23	2BJ04071		UPPER LEFT COVER B	1	1	1	1
⊙	24	2BL04120		REAR LEFT COVER	1	1	1	1
⊙	25	2BL04110		FRONT LEFT COVER	1	1	1	1
⊙	26	2BL04300		LID COVER LEFT	1	1	1	1
⊙	27	2BL04131	302BL04131	RIGHT COVER	1	1	1	1
⊙	28	2FG04030		REAR COVER A	1	1	1	1
⊙	29	2BJ04091		UPPER RIGHT COVER B (1/2)	1	1	1	1
	30	74315200		PIN,TONER HOPPER	1	1	1	1
	31	2A126130		PIN,OPTION	1	1	1	1
⊙	32	2BK04020		TRAY SUB C	1	1	1	1
⊙	33	2BK04030		STOPPER PAPER C	1	1	1	1
	34	2BL04840		PIN COVER HINGE S	1	1	1	1
	35	2BL04480		FRONT COVER HINGE S	1	1	1	1
	36	2BL05070		LABEL SEP CLEANING	1	1	1	1
⊙	37	2BL05120		LABEL CONVEYING JAM	1	1	1	1
⊙	38	5AAVBRUSH036	2BL16220	BRUSH CLEANER ASSY	1	1	1	1
⊙	39	2BJ04250		COVER FLYWHEEL	1	1	1	1
	40	2BL04880		FILM HINGE	2	2	2	2
⊙	41	2BK04040		STOPPER PAPER SUB	1	1	1	1
	42	2BL04410		PIN COVER	2	2	2	2
	43	73926080		PIN,HOOK LEVER	1	1	1	1
⊙	44	2BL06620		SPONGE FRONT	1	1	1	1
	45	2BL05240		LABEL OFF	1			
	46	2FG27540		GASKET MULTIPORT B	1	1	1	1
⊙	47	2FG04050	302FG04050	COVER MAIN SW			1	
	48	2FG27550		GASKET REAR COVER	2	2	2	2
	49	2FG23040	302FG23040	MOUNT OZONE FILTER B			1	
⊙	50	2FG23050	302FG23050	FILTER OZONE B			1	

• Parts with "•" are component parts or sub-assemblies of the assembly appearing immediately above them.
• Parts with "⊙"" indicates the spare parts.

• Parts with "• •" are component parts or sub-assembly with "•" appearing immediately above them.

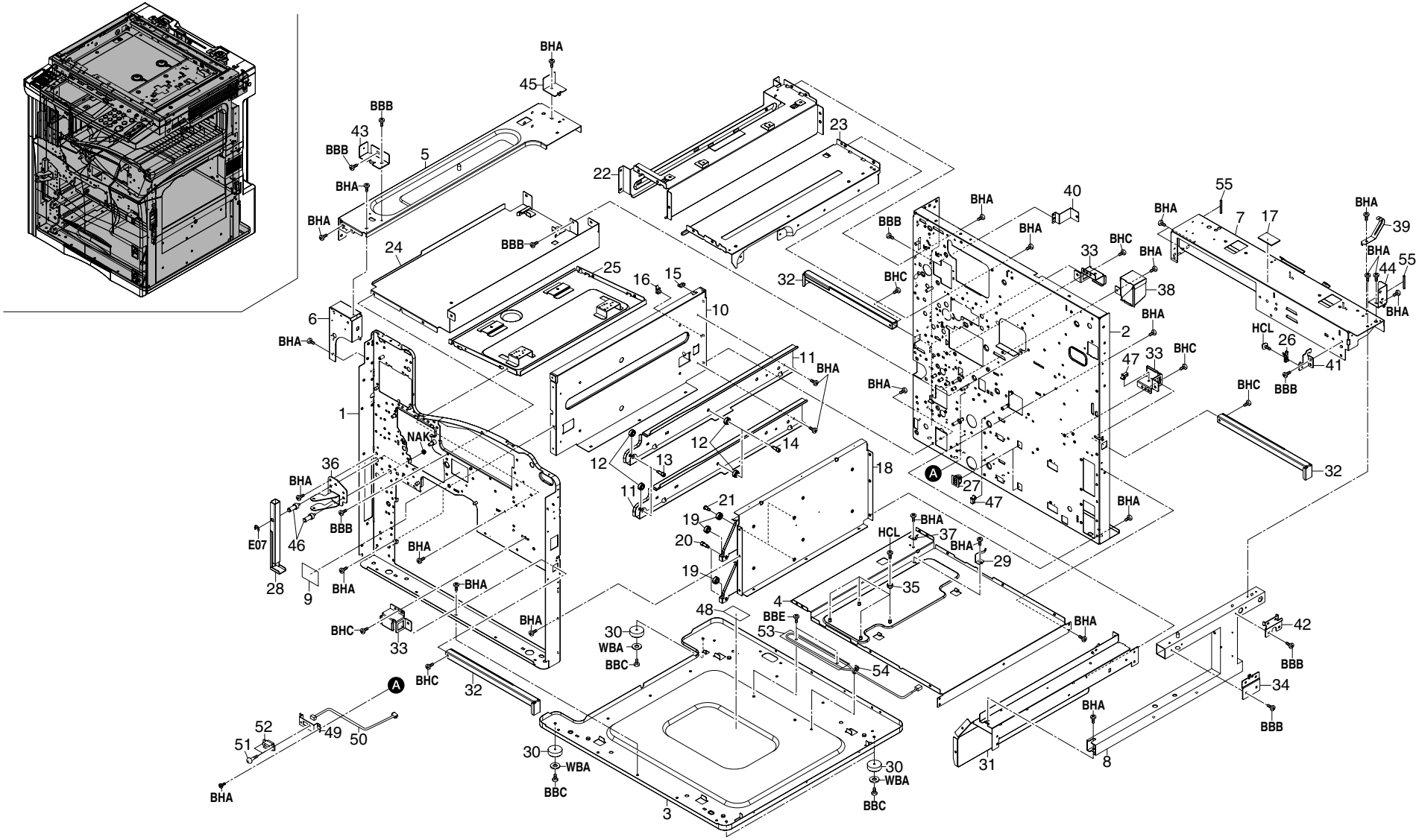
BHA
45
BBB
43
BBB
5
BHA
BHA
22
23
24
BBB
25
16
15
10
6
BHA
1
NAK
36
BHA
BBB
E07
46
28
9
BHA
BHA
BHA
BHC
33
BHA
BHC
32
A
52
51
49
50
BHA
30
WBA
BBC
3
30
WBA
BBC
48
BBE
53
54
30
WBA
BBC
4
35
HCL
37
BHA
29
BHA
18
21
19
20
19
12
13
12
14
11
11
BHA
BHA
BHA
BBB
32
BHC
40
BHA
BBB
BHA
BHC
33
BHA
38
2
BHA
47
33
BHC
A
27
47
BHA
55
7
17
BHA
39
BHA
44
55
BHA
HCL
26
41
BBB
BHC
BBB
BHC
32
42
BBB
34
BBB
BHA
31
8

FIG. 2 FRAMES

2FG/2FF/2FD-1

SP	Ref.No.	Part.No.	Alternative.	Description	Quantity			
					110V	120V	230V	240V
	1	2BL02010		FRONT FRAME	1	1	1	1
	2	2BL02020		REAR FRAME	1	1	1	1
	3	2BL02030		BASE	1	1	1	1
	4	2BL02040		BASE MIDDLE	1	1	1	1
	5	2BJ02040		UPPER LEFT PLATE	1	1	1	1
	6	2BJ02010		UPPER FRONT FRAME	1	1	1	1
	7	2BJ02020		UPPER REAR FRAME	1	1	1	1
	8	2BJ02030		UPPER RIGHT PIPE	1	1	1	1
	9	2BL05150		LABEL RADIATION	1	1	1	1
	10	2AR02060		LOWER LEFT REINFORCEMENT	1	1	1	1
	11	2AR07140		LEFT RAIL,CASSETTE	2	2	2	2
	12	2AR07800		PULLEY,CASSETTE RAIL	4	4	4	4
	13	2AR07810		FRONT PIN,CASSETTE RAIL	2	2	2	2
	14	2AR07820		REAR PIN,CASSETTE RAIL	2	2	2	2
	15	M2104350		EDGING,EDS-0607M(KITAGAWA)	1	1	1	1
	16	M2109330		WIRE SADDLE,YMC-10-0(KITAGAWA)	1	1	1	1
	17	2BJ27260		GASKET SHIELD B	1	1	1	1
	18	2AR02050		LOWER RIGHT REINFORCEMENT	1	1	1	1
	19	2AR07800		PULLEY,CASSETTE RAIL	4	4	4	4
	20	2AR07810		FRONT PIN,CASSETTE RAIL	2	2	2	2
	21	2AR07820		REAR PIN,CASSETTE RAIL	2	2	2	2
	22	2BL02100		UPPER PLATE FIXING	1	1	1	1
	23	2BL02060		UPPER PLATE DRUM	1	1	1	1
	24	2BL02130		LOWER PLATE CONT	1	1	1	1
	25	2BL02050		LOWER BASE LSU	1	1	1	1
	26	2BJ02121		HOLDER,FULCRUM	1	1	1	1
	27	77906291		HOLDER,CASSETTE STOPPER	2	2	2	2
	28	2BL02140		HANDLE MACHINE	1	1	1	1
	29	2BL06840		SPRING BYPASS RET	1	1	1	1
	30	2AR02180		BASE RUBBER	4	4	4	4
	31	2BL02120		UPPER RIGHT PLATE	1	1	1	1
	32	2BL02180		RIGHT HANDLE MACHINE	3	3	3	3
	33	2BL02150		MOUNT RIGHT HANDLE	3	3	3	3
	34	2BJ02050		RIGHT MOUNT ISU	1	1	1	1
	35	2BL06590		PULLEY RAIL	4	4	4	4
	36	2BL04470		MOUNT HINGE S	1	1	1	1
	37	2BL06410		GROUND PLATE MIDDLE	1	1	1	1
	38	2AR07720		COVER,CASSETTE RAIL	1	1	1	1
	39	2BJ26190		GROUND PLATE REAR COVER	1		1	
	40	2BL02200		MOUNT REAR COVER	1	1	1	1
	41	2BJ02110		FULCRUM PLATE,MIDDLE TRAY	1	1	1	1
	42	2BJ02070		REAR MOUNT ISU	1	1	1	1
	43	2BJ02060		FRONT MOUNT ISU	1	1	1	1
	44	2BJ02080		MOUNT COVER R	1	1	1	1
	45	2BJ02090		MOUNT COVER L	1	1	1	1
	46	2BL02170		PIN HANDLE	2	2	2	2
	47	M2109330		WIRE SADDLE,YMC-10-0(KITAGAWA)	3	3	3	3
	48	20305130		LABEL L,HIGH TEMPERATURE CAUTION(EXP)	1			
	49	2AR07710		MOUNT,PAPER FEED DRAWER	2	2	2	2
	50	2AR27600		JUNCTION WIRING,PRIMARY PAPER FEED UNIT	2	2	2	2
	51	33927450		RETAINING PIN,DRAWER	4	4	4	4
⊙	52	J0464080		RECEPTACLE,QR/P15-8S-C(02)(HIROSE)	2	2	2	2
⊙	53	33960010		HEATER,CASSETTE (120)	1			
⊙	54	49827700	M2107120	BINDING BAND SG-130	1			
	55	2FG27590		GASKET SCANNER	2	2	2	2

• Parts with "•" are component parts or sub-assemblies of the assembly appearing immediately above them.
• Parts with "⊙" indicates the spare parts.

• Parts with "• •" are component parts or sub-assembly with "•" appearing immediately above them.

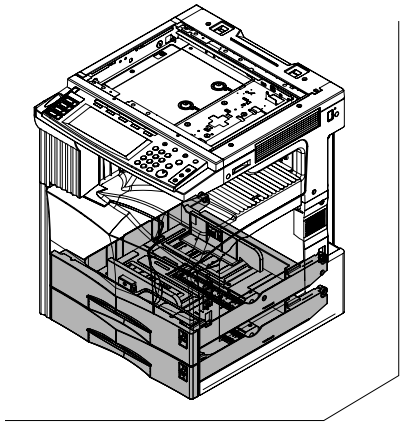

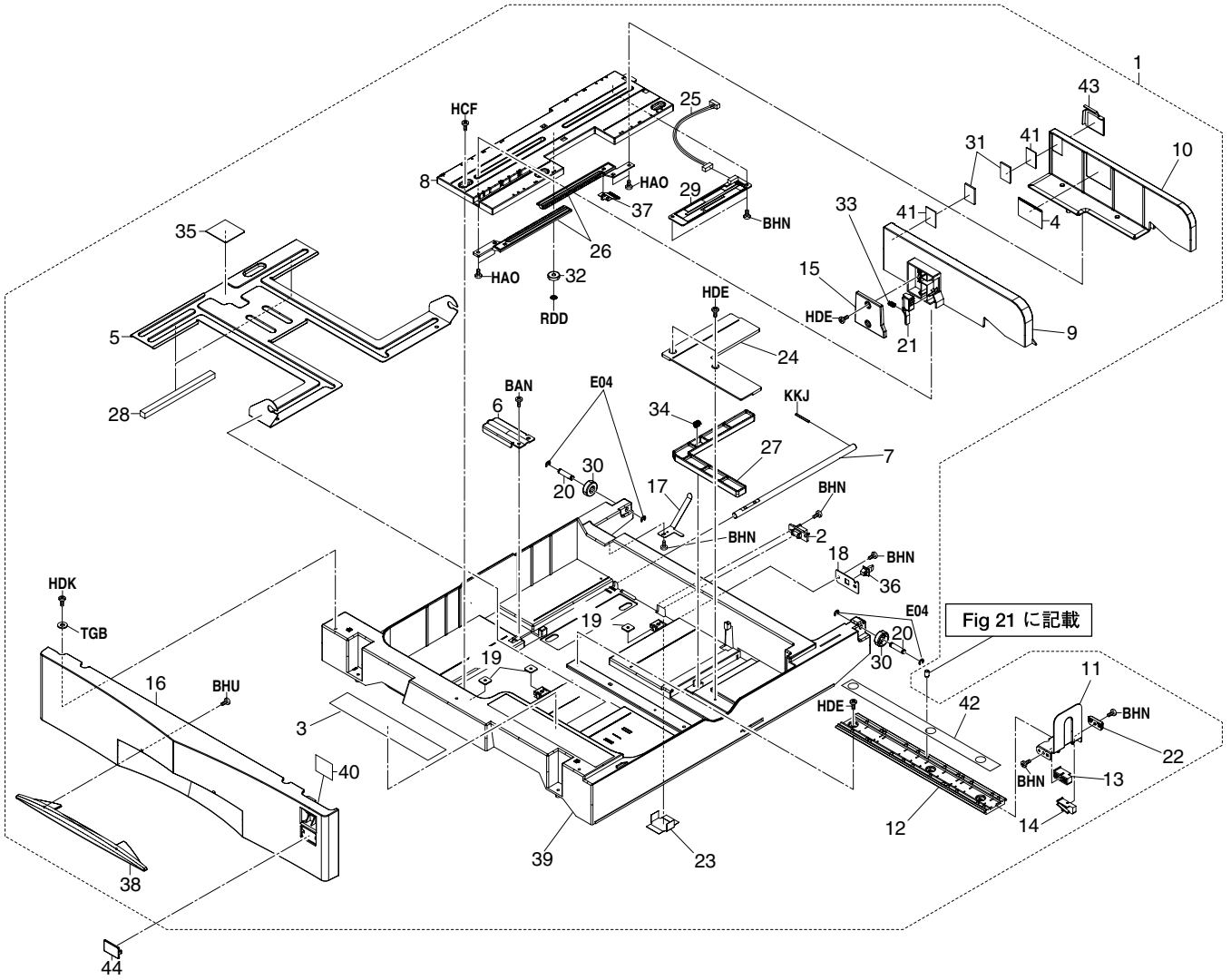
1
43
10
31
41
4
33
41
15
HDE
21
9
HCF
25
8
HAO
29
37
BHN
26
HAO
32
RDD
35
5
28
HDE
24
BAN
6
E04
34
KKJ
27
7
30
20
17
BHN
BHN
2
18
BHN
36
HDK
TGB
16
BHU
19
19
3
40
38
44
39
23
E04
20
30
HDE
42
11
BHN
22
BHN
13
14
12
Fig 21 に記載

FIG. 3 CASSETTE

2FG/2FF/2FD-1

SP	Ref.No.	Part.No.	Alternative.	Description	Quantity			
					110V	120V	230V	240V
⊙	1	2BL93113		PARTS,PC-700(A4)	2		2	2
⊙	1	2BL93123		PARTS,PC-700(LTR)		2		
⊙	2	•J0463080		PLUG,QR/P15-8S-C(HIROSE)	2	2	2	2
	3	•2AR05150		LABEL,CASSETTE OPERATION	2	2	2	2
	4	•2AR05200		LABEL,PAPER UPPER LIMIT	2	2	2	2
	5	•2AR07020		BASE,CASSETTE	2	2	2	2
	6	•2AR07030		WORK PLATE,CASSETTE BASE	2	2	2	2
	7	•2AR07040		SHAFT,WORK PLATE	2	2	2	2
	8	•2AR07052		RAIL A,CURSOR	2	2	2	2
	9	•2AR07060		CURSOR A,CASSETTE	2	2	2	2
	10	•2AR07071		CURSOR B,CASSETTE	2	2	2	2
	11	•2AR07080		CURSOR C,CASSETTE	2	2	2	2
	12	•2AR07091		RAIL C,CURSOR	2	2	2	2
	13	•2AR07100		FRONT GUIDE C,CURSOR	2	2	2	2
	14	•2AR07110		REAR GUIDE C,CURSOR	2	2	2	2
	15	•2AR07120		LID A,CURSOR	2	2	2	2
⊙	16	•2BL04140		COVER CASSETTE	2	2	2	2
⊙	17	•2AR07150		GROUND PLATE,CASSETTE	2	2	2	2
	18	•2AR07160		MOUNT,CASSETTE STOPPER	2	2	2	2
	19	•2AR07180		RETAINER M4	6	6	6	6
	20	•2AR07190		SHAFT,CASSETTE PULLEY	4	4	4	4
	21	•2FG07010		LEVER A,CURSOR	2	2	2	2
	22	•2AR07610		STOPPER,TRAILING EDGE DETECTION	2	2	2	2
	23	•2AR07620		PROTECTING PLATE,CASSETTE WIRE	2	2	2	2
	24	•2AR07630		LID,TRAILING EDGE DETECTION PLATE	2	2	2	2
	25	•2AR27220		WIRE,CASSETTE UNIT	2	2	2	2
⊙	26	•3CY06090		RACK CURSOR	4	4	4	4
	27	•33907170		DETECTION PLATE,PAPER SIZE	2	2	2	2
⊙	28	•33907210		CUSHION,CASSETTE WORK PLATE	4	4	4	4
⊙	29	•2FG01020		SIZE DETECTION ASS'Y	2	2	2	2
⊙	30	•34907150		PULLEY,CASSETTE	4	4	4	4
⊙	31	•60907170		CUSHION,CASSETTE R	4	4	4	4
⊙	32	•3CY06100		GEAR 20,CURSOR	2	2	2	2
	33	•66007120		SPRING,CURSOR C	2	2	2	2
⊙	34	•66106080		SPRING,PAD	2	2	2	2
⊙	35	•66107100		PAD,CASSETTE	2	2	2	2
	36	•77906210		CASSETTE STOPPER	2	2	2	2
	37	•2BC07860		TERMINAL,PAPER SIZE DETECTION	2	2	2	2
⊙	38	•2BL04160	5MVX843CH003	HANDLE CASSETTE	2	2	2	2
	39	•2AR07011		CASSETTE	2	2	2	2

SP	Ref.No.	Part.No.	Alternative.	Description	Quantity			
					110V	120V	230V	240V
⊙	40	•2BL06470	5MVS446VE001	PLATE SIZE C	2		2	2
⊙	40	•2BL06910	5MVS446VE002	PLATE SIZE IN		2		
	41	•2BL06980		MOUNT CUSHION	4	4	4	4
	42	•2BL05260		LABEL CASSETTE SIZE	2	2	2	2
	43	•2BJ68190		STOPPER PAPER SP	2	2	2	2
⊙	44	2BL04310		PLATE NUMBER	1	1	1	1
⊙	44	2BL04370		PLATE NUMBER 2	1	1	1	1

• Parts with "•" are component parts or sub-assemblies of the assembly appearing immediately above them.
• Parts with "⊙"" indicates the spare parts.

• Parts with "• •" are component parts or sub-assembly with "•" appearing immediately above them.

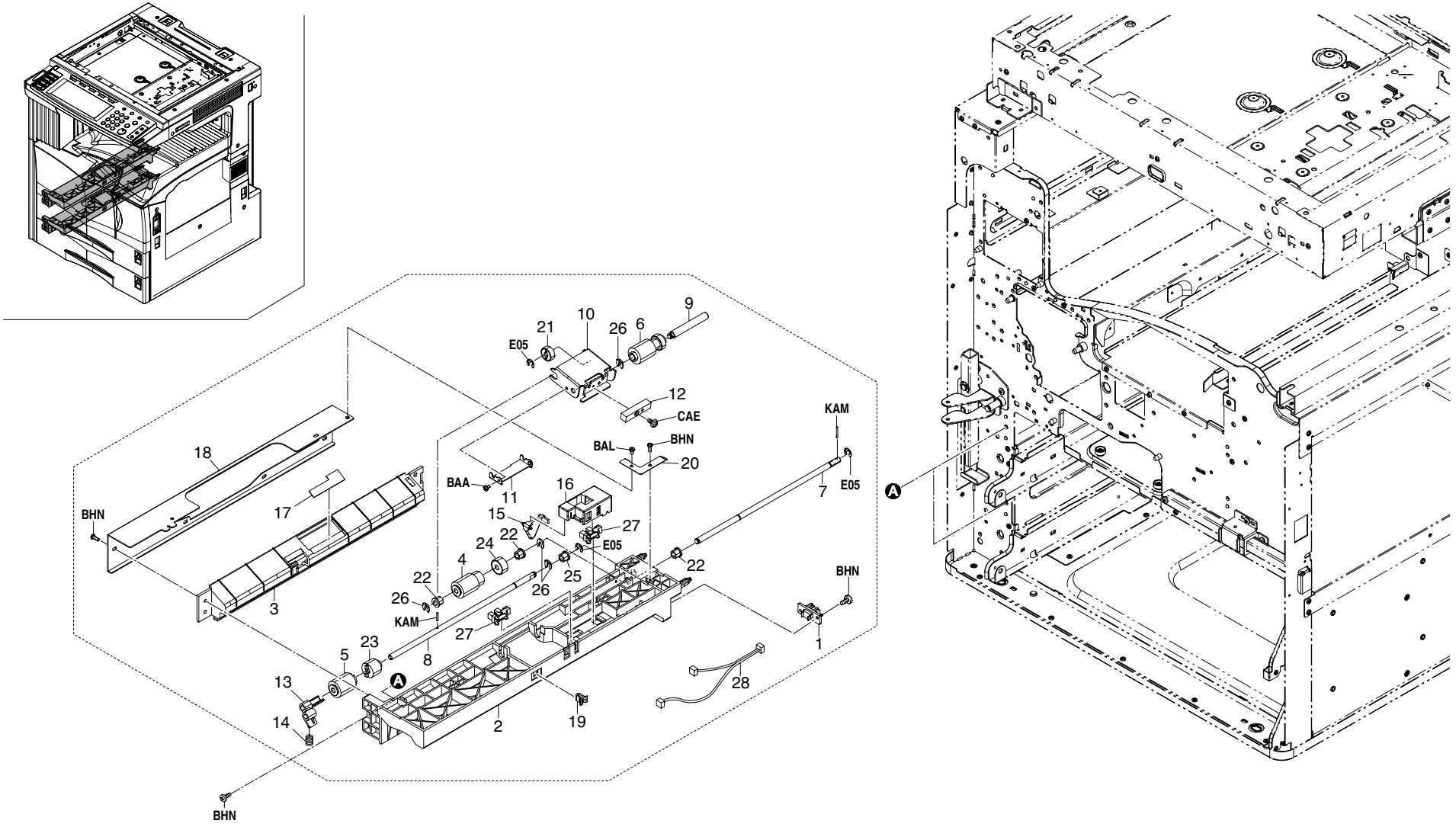
1
2
3
4
5
6
7
8
9
10
11
12
13
14
15
16
17
18
19
20
21
22
23
24
25
26
27
28
A
BAA
BAL
BHN
CAE
E05
KAM

FIG. 4 PAPER FEED-IN SECTION I

SP	Ref.No.	Part.No.	Alternative.	Description	Quantity			
					110V	120V	230V	240V
⊙		2BJ00020		PAPER FEED ASSY(CHN)	2	2	2	2
⊙	1	•J0463080		PLUG,QR/P15-8S-C(HIROSE)	2	2	2	2
	2	•2AR07200		UPPER HOUSING,PAPER FEED	2	2	2	2
	3	•2AR07210		LOWER HOUSING,PAPER FEED	2	2	2	2
⊙	4	•2AR07220		PULLEY,PAPER FEED	2	2	2	2
⊙	5	•2AR07230		PULLEY,SEPARATION	2	2	2	2
⊙	6	•2BJ06010		PULLEY FEED A	2	2	2	2
	7	•2AR07250		SHAFT,PAPER FEED	2	2	2	2
	8	•2AR07260		SHAFT,SEPARATION	2	2	2	2
	9	•2AR07270		SHAFT,LEADING FEED	2	2	2	2
	10	•2BL07900		PLATE LEADING FEED	2	2	2	2
	11	•2BL07910		SUPPORT PLATE FEED	2	2	2	2
	12	•2AR07300		WEIGHT,LEADING FEED PULLEY	2	2	2	2
	13	•2AR07310		LEVER,SEPARATION PULLEY RELEASE	2	2	2	2
⊙	14	•2BL07990		SPRING SEPARATION	2	2	2	2
	15	•2AR07640		ACTUATOR,PAPER EMPTY	2	2	2	2
	16	•2AR07650		HOLDER,ACTUATOR	2	2	2	2
	17	•2AR07660		GUIDE FILM,SEPARATION PULLEY	2	2	2	2
	18	•2AR07670		REINFORCEMENT,PRIMARY PAPER FEED	2	2	2	2
	19	•2AR07690		STOPPER,SUPPORT PLATE	2	2	2	2
	20	•2AR07790		GROUND PLATE,PRIMARY PAPER FEED	2	2	2	2
⊙	21	•34922420		GEAR 15	2	2	2	2
⊙	22	•29806810		BUSHING,6 REGISTRATION	6	6	6	6
⊙	23	•33906070		TORQUE LIMITER,PAPER FEED	2	2	2	2
⊙	24	•33906160		GEAR 16,PAPER FEED	2	2	2	2
⊙	25	•34806040		LOWER BUSHING,PAPER FEED	2	2	2	2
⊙	26	•2A806250	5MVX111DN003	RING STOPPER	8	8	8	8
⊙	27	•35327400		SWITCH,FEED	4	4	4	4
	28	•2AR27430		WIRE,PRIMARY PAPER FEED UNIT	2	2	2	2

• Parts with "•" are component parts or sub-assemblies of the assembly appearing immediately above them.
• Parts with "⊙"" indicates the spare parts.

• Parts with "• •" are component parts or sub-assembly with "•" appearing immediately above them.

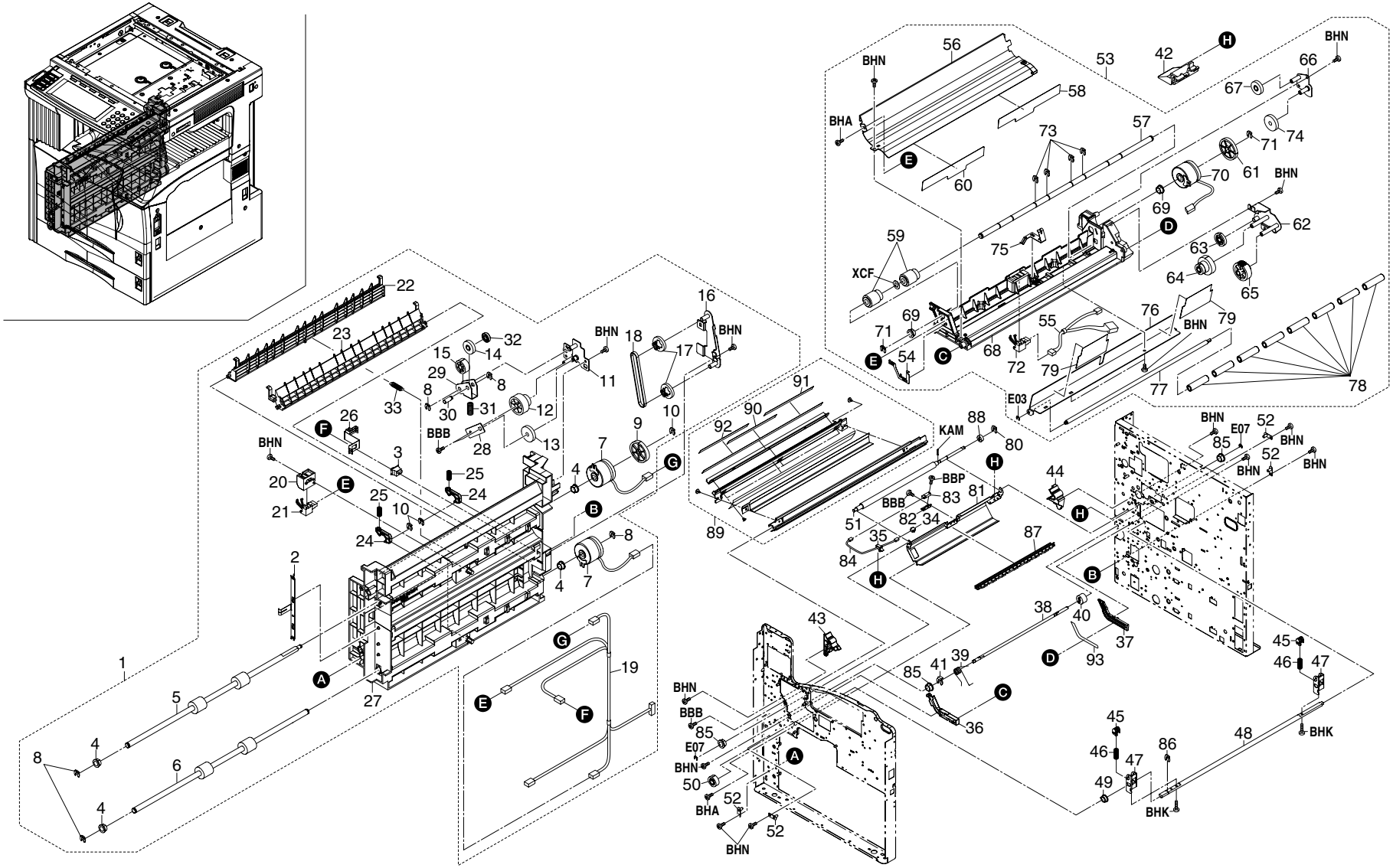
BHN
BHA
BBB
BBP
KAM
XCF
E03
E07
BHK

FIG. 5 PAPER FEED-IN SECTION II

SP	Ref.No.	Part.No.	Alternative.	Description	Quantity			
					110V	120V	230V	240V
⊙	1	2FG93080		PARTS,VERTICAL FEED ASS'Y,SP	1	1	1	1
	2	•2BL06220		EARTH VERTICAL FEED	1	1	1	1
⊙	3	•35927420		SWITCH,SIZE	1	1	1	1
⊙	4	•67322230		BUSHING 8	4	4	4	4
⊙	5	•2BL06080		ROLLER B FEED	1	1	1	1
⊙	6	•2BL06090		ROLLER C FEED	1	1	1	1
⊙	7	•2FG27160		CLUTCH FEED	2	2	2	2
⊙	8	•2BC06980		STOPPER 5	5	5	5	5
⊙	9	•2BL06170		GEAR Z42 FEED	1	1	1	1
⊙	10	•2A806250	5MVX111DN003	RING STOPPER	3	3	3	3
	11	•2FG06020		MOUNT FEED DRIVE A	1	1	1	1
⊙	12	•2FG06040		GEAR Z21-Z36 FEED	1	1	1	1
⊙	13	•36222250		GEAR 30,IDLE	1	1	1	1
⊙	14	•2AL06110		GEAR 25	1	1	1	1
⊙	15	•2BL06380		GEAR Z25 JOINT	1	1	1	1
	16	•2BL06130		MOUNT C FEED DRIVE	1	1	1	1
⊙	17	•2BL06180		GEAR Z28-P18 FEED	2	2	2	2
⊙	18	•2BL06320		BELT CONVEYING	1	1	1	1
	19	•2BL27190		WIRE CONVEYING	1	1	1	1
	20	•2BL06450		HOLDER FEED SWITCH	2	2	2	2
⊙	21	•2BL27410		SWITCH CONVEYING	2	2	2	2
	22	•2BL06110		GUIDE VERTICAL FEED	1	1	1	1
	23	•2BL06330		GUIDE B FEED	1	1	1	1
⊙	24	•2BL06490	5MVX421DN003	LOCK COVER R	2	2	2	2
	25	•2BL06460		SPRING LEFT COVER	2	2	2	2
	26	•2BL06940		EARTH PUSH SWITCH	1	1	1	1
	27	•2FG06010		FRAME VERTICAL FEED A	1	1	1	1
	28	•2FG06030		MOUNT FEED DRIVE B	1	1	1	1
	29	•2FG06050		JOINT FEED DRIVE	1	1	1	1
	30	•2FG06060		SHAFT FEED JOINT	1	1	1	1
	31	•2FG06070		SPRING FEED JOINT	1	1	1	1
	32	•2FG06120		COLLAR FEED JOINT	1	1	1	1
	33	•2FG06130		SPRING GUIDE FEED	1	1	1	1
	34	J5016030		CASE,BU03P-TR-PC-H(JST)	1	1	1	1
	35	M2109330		WIRE SADDLE,YMC-10-0(KITAGAWA)	1	1	1	1
	36	2BL06051		FRONT RAIL FEED	1	1	1	1
	37	2BL06061		REAR RAIL FEED	1	1	1	1
	38	2BL04520		SHAFT LEFT COVER M	1	1	1	1
	39	2BL16230		SPRING CONV OPEN	1	1	1	1
	40	2BL06950		DUMPER LEFT COVER	1	1	1	1
⊙	41	33973300		STOPPER 7,CARTRIDGE	1	1	1	1
	42	2BL06430		COVER CONNECTOR	1	1	1	1
	43	2FG16160		GUIDE ROLLER F	1	1	1	1
	44	2FG16170		GUIDE ROLLER R	1	1	1	1
	45	2BL14240		CAM DLP	2	2	2	2
	46	2BL14410		SPRING CAM	2	2	2	2
	47	2BL14140		MOUNT CAM	2	2	2	2
	48	2BL14230		SHAFT CAM	1	1	1	1
	49	2BM17920	5MVM122DB003	BUSH POM	1	1	1	1
⊙	50	2BL14250		GEAR 18	1	1	1	1
⊙	51	2FG06210		RIGHT ROLLER REGIST	1	1	1	1
	52	2AR02250		POSITIONING PLATE,LSU	4	4	4	4
⊙	53	2FG93062		PARTS,MIDDLE FEED ASS'Y	1	1	1	1
	54	•2BL06230		GROUND PLATE A FEED	1	1	1	1
	55	•2BL27240		WIRE FEED 1	1	1	1	1
	56	•2BL06020		GUIDE A FEED	1	1	1	1
	57	•2BL06920		SHAFT FEED A	1	1	1	1
⊙	58	•2BL06480		FILM REGIST F	1	1	1	1
⊙	59	•2BL06930		PULLEY FEED	2	2	2	2
⊙	60	•2BL06970		FILM REGIST FF	1	1	1	1
⊙	61	•2BL06360		GEAR Z42 BYPASS	1	1	1	1
	62	•2FG06160		MOUNT BYPASS FEED	1	1	1	1
⊙	63	•2BL06190		GEAR Z25 FEED	1	1	1	1
⊙	64	•2BL06160		GEAR Z35-15 FEED	1	1	1	1
⊙	65	•2BL06150		GEAR Z28 FEED	1	1	1	1
	66	•2FG06150		MOUNT MID FEED DRIVE	1	1	1	1
⊙	67	•36222250		GEAR 30,IDLE	1	1	1	1
	68	•2FG06081		HOUSING FEED A	1	1	1	1
⊙	69	•67322230		BUSHING 8	2	2	2	2
⊙	70	•2FG27180		CLUTCH REGISTRATION	1	1	1	1
⊙	71	•2BC06980		STOPPER 5	2	2	2	2
⊙	72	•2BL27410		SWITCH CONVEYING	1	1	1	1
⊙	73	•2BC06910		STOPPER 6	4	4	4	4
⊙	74	•2AL06110		GEAR 25	1	1	1	1
	75	•2FG06170		GROUND PLATE GUIDE A	1	1	1	1
	76	•2FG06090		GUIDE MIDDLE FEED	1	1	1	1
	77	•2FG06100		SHAFT MIDDLE FEED	1	1	1	1
	78	•2FG06110		PULLEY MIDDLE FEED	8	8	8	8
	79	•2FG06200		FILM MIDDLE FEED	2	2	2	2
⊙	80	2BC06910		STOPPER 6	1	1	1	1

• Parts with "•" are component parts or sub-assemblies of the assembly appearing immediately above them.
• Parts with "⊙" indicates the spare parts.

• Parts with "• •" are component parts or sub-assembly with "•" appearing immediately above them.

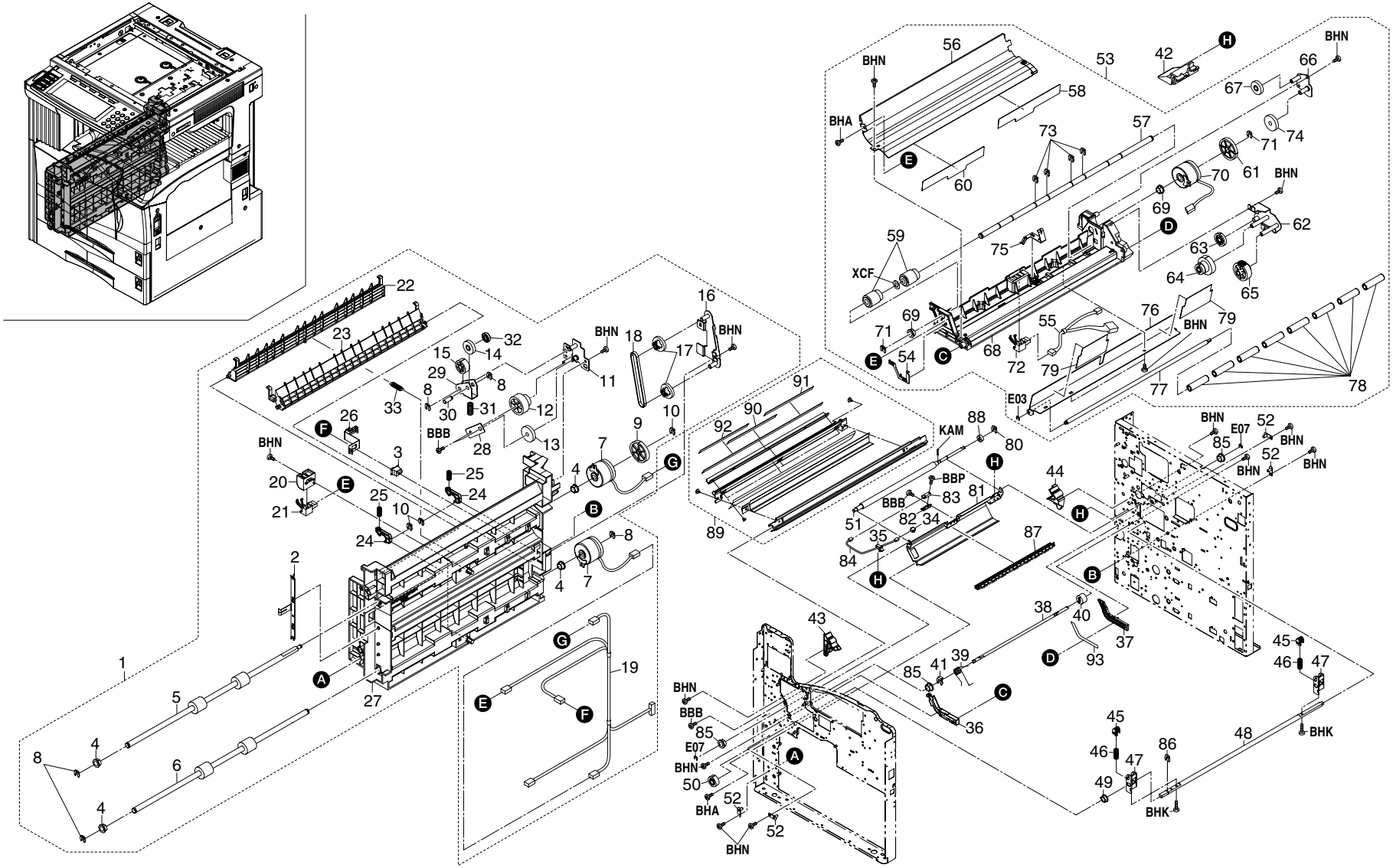
BHN
BHA
BBB
BBP
KAM
XCF
E03
E07
BHK

FIG. 5 PAPER FEED-IN SECTION II

SP	Ref.No.	Part.No.	Alternative.	Description	Quantity			
					110V	120V	230V	240V
	81	2BL06260		FRONT GUIDE REGIST	1	1	1	1
	82	2BL06440		MOUNT REGIST SWITCH	1	1	1	1
⊙	83	2FG27110		SWITCH REGISTRATION	1	1	1	1
	84	2BL27170		WIRE REGISTRATION	1	1	1	1
⊙	85	67322230		BUSHING 8	3	3	3	3
⊙	86	2BC06980		STOPPER 5	1	1	1	1
⊙	87	2BL93450		PARTS,REGISTRATION	1	1	1	1
⊙	88	36722860		GEAR 18	1	1	1	1
⊙	89	2FG93110		PARTS,GUIDE TRANSFER ASS'Y	1	1	1	1
	90	•2FG05100		LABEL DRUM CAUTION A		1		
	91	•2FG05080		LABEL DRUM CAUTION E1	1		1	1
	92	•2FG05090		LABEL DRUM CAUTION E2			1	1
⊙	93	2FG06220		FILM MIDDLE FEED RAIL R	1	1	1	1

• Parts with "•" are component parts or sub-assemblies of the assembly appearing immediately above them.
• Parts with "⊙"" indicates the spare parts.

• Parts with "• •" are component parts or sub-assembly with "•" appearing immediately above them.

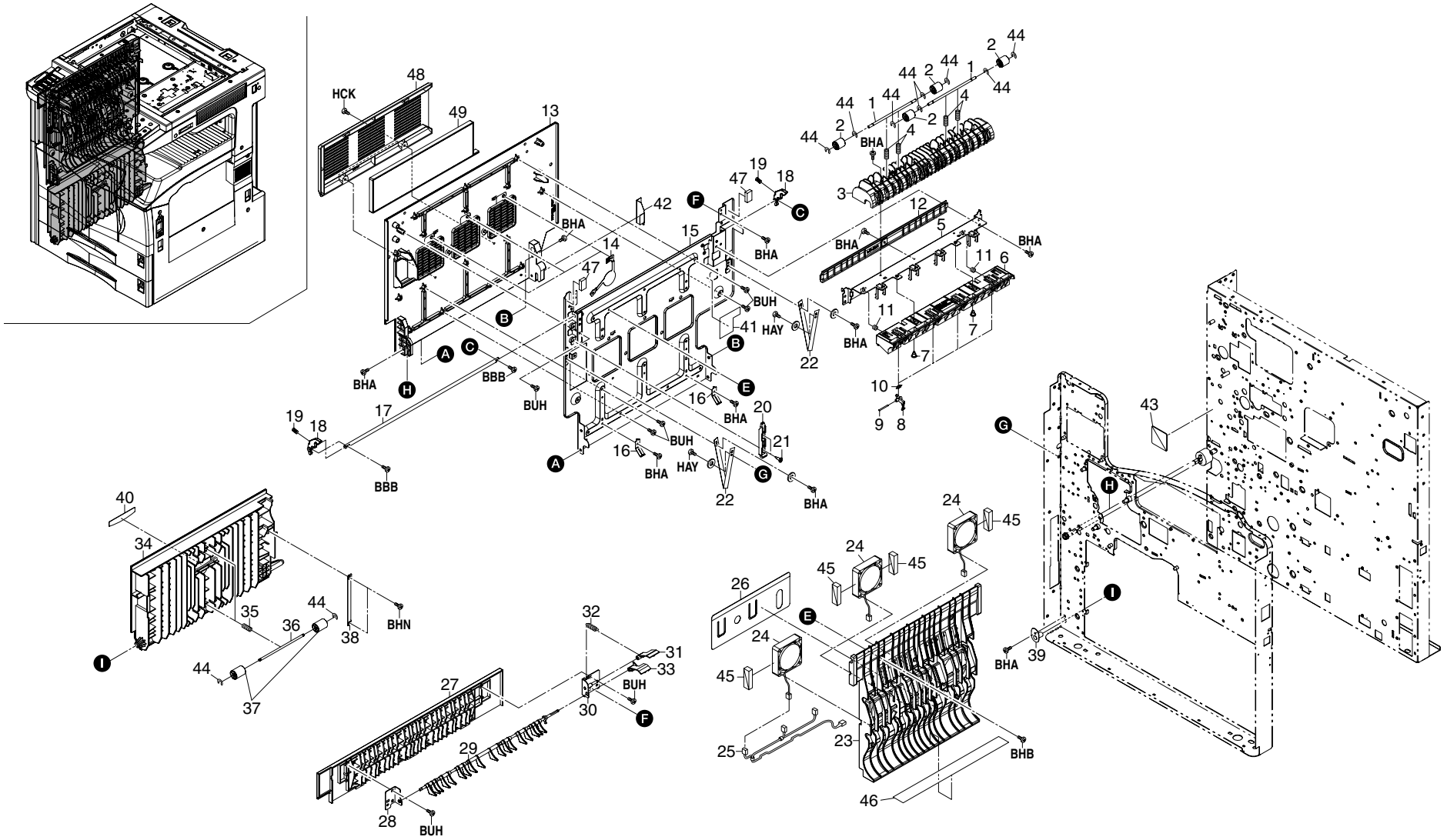
HCK
48
49
13
42
14
47
15
19
18
47
BHA
BUH
HAY
BBB
BHN
BHB
16
17
20
21
22
41
12
5
11
6
7
10
9
8
2
44
1
4
3
43
39
40
34
35
36
38
37
32
31
33
30
27
29
28
26
24
45
25
23
46

FIG. 6 PAPER FEED-IN SECTION III

SP	Ref.No.	Part.No.	Alternative.	Description	Quantity			
					110V	120V	230V	240V
⊙	1	2BL21361		SHAFT CHANGE PULLEY	2	2	2	2
⊙	2	2BL21330		PULLEY FEED SHIFT	4	4	4	4
	3	2BL21290		GUIDE EXIT L	1	1	1	1
	4	2BL21340		SPRING CHANGE PULLEY	4	4	4	4
	5	2FG20181		MOUNT REAR GUIDE	1	1	1	1
	6	2FG20170		REAR GUIDE FIXING	1	1	1	1
	7	34920170		FULCRUM PIN,FIXING	2	2	2	2
⊙	8	2BL20350		CLAW PRESS ROLLER	4	4	4	4
	9	2AR20510		SHAFT,PRESSURE ROLLER SEPARATION CLAW	4	4	4	4
⊙	10	2FG20370		SPRING PRESS ROLLER	4	4	4	4
	11	65009050		SPRING,DEVELOPING ROCK	2	2	2	2
	12	2BL21410		GUIDE FEED SHIFT L	1	1	1	1
⊙	13	2BL04511	302BL04511	LEFT COVER MIDDLE	1	1	1	1
	14	2BL23110		GROUND PLATE LEFT FAN	3	3	3	3
	15	2BL04621	302BL04621	PLATE LEFT COVER M	1	1	1	1
	16	2BL04700		GROUND PLATE LEFT B	2	2	2	2
	17	2BL04540		SHAFT L COVER LOCK M	1	1	1	1
⊙	18	2BL04550		LEVER L COVER LOCK M	2	2	2	2
	19	2BL04560		SPRING L COVER LOCK	2	2	2	2
	20	2BL04600		LEVER COVER RELEASE	1	1	1	1
	21	73912281		PIN,ORIGINAL HOLDER	2	2	2	2
	22	2BL04680		STRAP COVER	2	2	2	2
	23	2BL21320		GUIDE LEFT COVER M	1	1	1	1
⊙	24	2FG27080		FAN MOTOR 4	3	3	3	3
	25	2BL27300		WIRE CONVEYING FAN	1	1	1	1
	26	2BL21460		FILM WIRE PROTECT	1	1	1	1
⊙	27	2BJ04510		COVER EXIT L	1	1	1	1
	28	2BJ04520		FRONT PLATE EXIT L	1	1	1	1
	29	2BJ21011		GUIDE CHANGE UP	1	1	1	1
	30	2BJ04530		REAR PLATE EXIT L	1	1	1	1
⊙	31	2BJ21021		LEVER GUIDE CHANGE U	1	1	1	1
	32	2BJ21030		SPRING CHANGE UP	1	1	1	1
⊙	33	2BJ21040		LEVER CHANGE UP B	1	1	1	1
⊙	34	2BL06100		LEFT COVER FEED	1	1	1	1
	35	2BL06340		SPRING FEED	2	2	2	2
⊙	36	2BL06211		SHAFT FEED PULLEY	2	2	2	2
⊙	37	2BL16080		PULLEY FEED	4	4	4	4
	38	2BL06960		STRAP RELEASE	1	1	1	1
	39	2AR07540		RETAINING PIN,VERTICAL CONVEYING	1	1	1	1
⊙	40	2BL05250		LABEL LEFT COVER A	1	1	1	1
	41	2BL05110		LABEL HIGH TEMP	1	1	1	1
	42	2BL21500		FILM WIRE PROTECT B	1	1	1	1
⊙	43	2BL05271		LABEL DRUM CAUTION	1	1	1	1
⊙	44	2BL16290		CUT WASHER 3	12	12	12	12
⊙	45	2BL23170		SPONGE LEFT FAN	4	4	4	4
	46	2BL21490		GUIDE FILM DU	1	1	1	1
	47	2AC26310		SHIELD 10X8X20,GASKET	2	2	2	2
	48	2FG23020	302FG23020	MOUNT OZONE FILTER A			1	
⊙	49	2FG23030	302FG23030	FILTER OZONE A			1	

• Parts with "•" are component parts or sub-assemblies of the assembly appearing immediately above them.
• Parts with "⊙" indicates the spare parts.

• Parts with "• •" are component parts or sub-assembly with "•" appearing immediately above them.

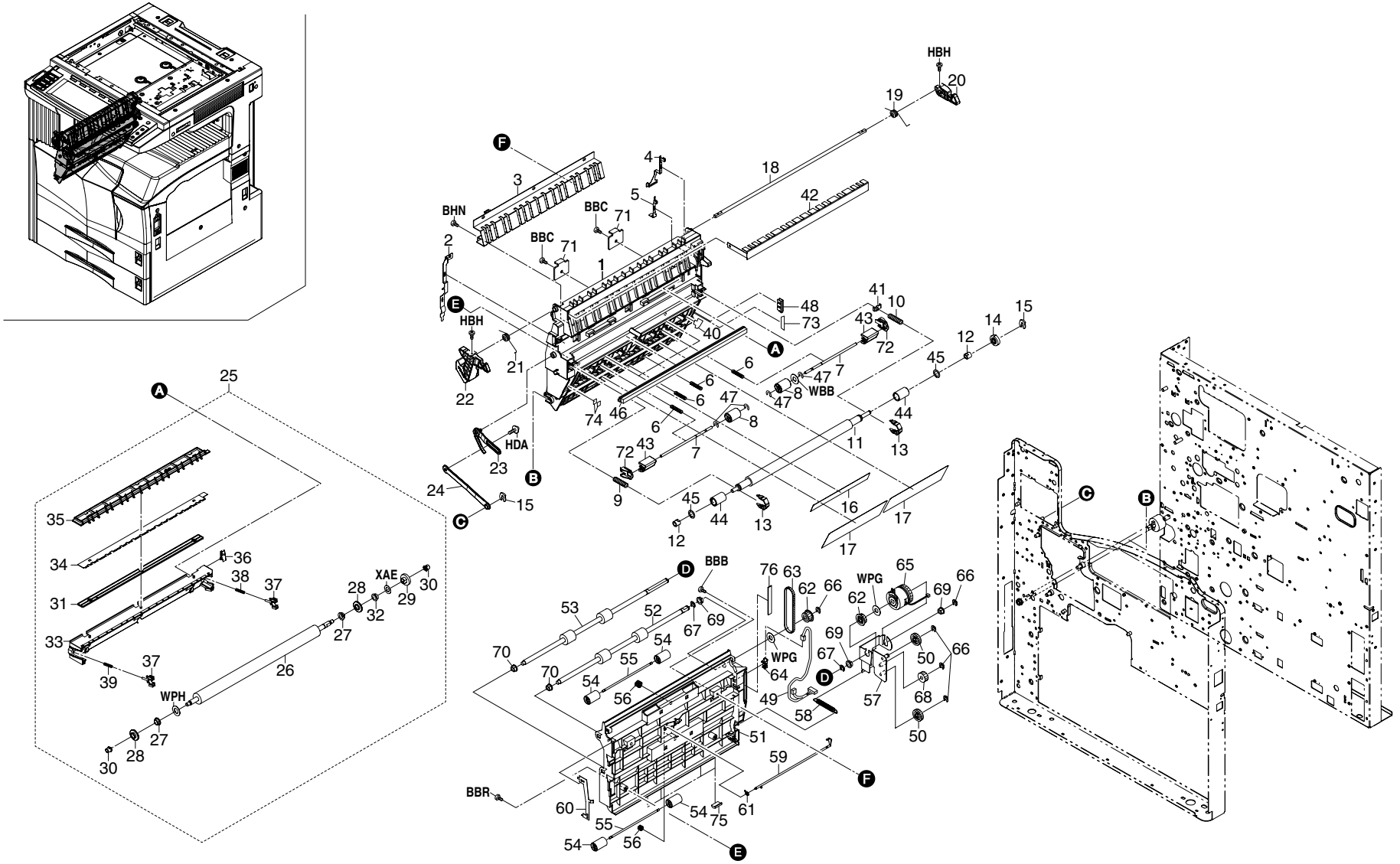
HBH
BHN
BBC
HDA
WBB
XAE
WPH
WPG
BBB
BBR

FIG. 7 PAPER CONVEYING SECTION

SP	Ref.No.	Part.No.	Alternative.	Description	Quantity			
					110V	120V	230V	240V
	1	2FG16260		BASE CONVEYING A	1	1	1	1
	2	2BL16160		PLATE TRANS UNIT GND	1	1	1	1
	3	2FG16200		PLATE PAPER GUIDE	1	1	1	1
	4	2BL16150		PLATE TRANS B	1	1	1	1
	5	2BL16170		PLATE SEPARATION B	1	1	1	1
	6	2FG16320		SPRING FEED	4	4	4	4
⊙	7	2FG16280		SHAFT FEED	2	2	2	2
⊙	8	2BL16080		PULLEY FEED	2	2	2	2
⊙	9	2FG16300		FRONT SPRING REGIST	1	1	1	1
⊙	10	2FG16310		REAR SPRING REGIST	1	1	1	1
⊙	11	2FG16021		ROLLER REGIST	1	1	1	1
⊙	12	2BL16260		BUSHING REGIST	2	2	2	2
	13	2BL16030		STOPPER BUSH	2	2	2	2
⊙	14	2BL16060		GEAR REGIST Z18	1	1	1	1
⊙	15	2A806250	5MVX111DN003	RING STOPPER	2	2	2	2
⊙	16	2BL16130		GUIDE REGIST F	2	2	2	2
	17	2BL16250		GUIDE FEED F	2	2	2	2
	18	2BL16210		SHAFT CONVEYING	1	1	1	1
	19	2BL16240		SPRING CONVEYING B	1	1	1	1
⊙	20	2BL16190		HOOK CONVEYING	1	1	1	1
	21	2BL16200		SPRING CONVEYING	1	1	1	1
⊙	22	2BL16180		HANDLE CONVEYING	1	1	1	1
	23	2BL16100		STRAP CONVEYING A	1	1	1	1
	24	2BL16110		STRAP CONVEYING B	1	1	1	1
⊙	25	2FG93091		PARTS,TRANSFER ROLLER	1	1	1	1
⊙	26	•2BL17021		ROLLER TRANSFER	1	1	1	1
⊙	27	•2BL17170		BUSHING 8	2	2	2	2
⊙	28	•2BL17040		PULLEY TRANS ROLLER	2	2	2	2
⊙	29	•2BL17090		GEAR TRANS Z25H	1	1	1	1
⊙	30	•2BL17030		COLLAR TRANS ROLLER	2	2	2	2
	31	•2FG17020		SPACER SEPARATION	1	1	1	1
⊙	32	•75718040		BUSHING,CLEANING BLADE SHAFT	1	1	1	1
	33	•2BL17010		HOUSING TRANSFER	1	1	1	1
⊙	34	•2FG17040		BRUSH SEPARATION	1	1	1	1
	35	•2FG17010		HOLDER SEPARATION A	1	1	1	1
	36	•2BL17050		PLATE TRANS UNIT	1	1	1	1
⊙	37	•2BL17060		BUSH TRANS ROLLER	2	2	2	2
⊙	38	•2FG17160		SPRING TRANS R	1	1	1	1
⊙	39	•2BL17070		SPRING TRANS F	1	1	1	1
⊙	40	2FG16340		FILM FEED SHAFT R	1	1	1	1
	41	2FG16250		SPACER REGIST	1	1	1	1
	42	2FG16270		SHEET CONVEYING	1	1	1	1
	43	2FG16290		GUIDE FEED	2	2	2	2
	44	2FG16030		PULLEY REGIST	2	2	2	2
	45	2BL07970		CUT WASHER 10	2	2	2	2
⊙	46	2BL07950		UNDER CLEANER REGIST	1	1	1	1
⊙	47	2BL16290		CUT WASHER 3	4	4	4	4
	48	2FG16010		PLATE MID FEED UNIT	1	1	1	1
	49	2BL27200		WIRE DUPLEX	1	1	1	1
⊙	50	2AL06110		GEAR 25	2	2	2	2
	51	2BL07010		FRAME DU	1	1	1	1
⊙	52	2BL07020		ROLLER DU FEED UP	1	1	1	1
⊙	53	2BL07030		ROLLER DU FEED LOW	1	1	1	1
⊙	54	2BL07040		PULLEY DU	4	4	4	4
	55	2BL07051		SHAFT DU PULLEY	2	2	2	2
	56	2BL07060		SPRING DU PULLEY	2	2	2	2
	57	2BL07070		JOINT DU	1	1	1	1
	58	2BL07080		SPRING DU JOINT	1	1	1	1
⊙	59	2BL07090		ACTUATOR DU	1	1	1	1
	60	2BL07110		PLATE EARTH DU	1	1	1	1
⊙	61	2BL07130		SPRING DU ACT.	1	1	1	1
⊙	62	2BL21230		PULLEY EXIT T30	2	2	2	2
⊙	63	2BL21240		BELT EXIT P2M212	1	1	1	1
⊙	64	2C927210		SENSOR 248NL1	1	1	1	1
⊙	65	2FG27160		CLUTCH FEED	1	1	1	1
⊙	66	2BC06980		STOPPER 5	5	5	5	5
⊙	67	2BC06910		STOPPER 6	2	2	2	2
⊙	68	66506630		GEAR 20,IDLE	1	1	1	1
⊙	69	67322230		BUSHING 8	3	3	3	3
⊙	70	73210450		BUSH, 6	2	2	2	2
	71	2BL07120		PLATE NUT DU	2	2	2	2
	72	2FG16330		HOLDER SHAFT	2	2	2	2
⊙	73	2FG16360		FILM PLATE MID	1	1	1	1
	74	2FG16350		FILM PLATE TRANS	2	2	2	2
	75	2BL07150		GUIDE RIB DU	4	4	4	4
	76	2BL07140		FILM WIRE DU	1	1	1	1

• Parts with "•" are component parts or sub-assemblies of the assembly appearing immediately above them.
• Parts with "⊙" indicates the spare parts.

• Parts with "• •" are component parts or sub-assembly with "•" appearing immediately above them.

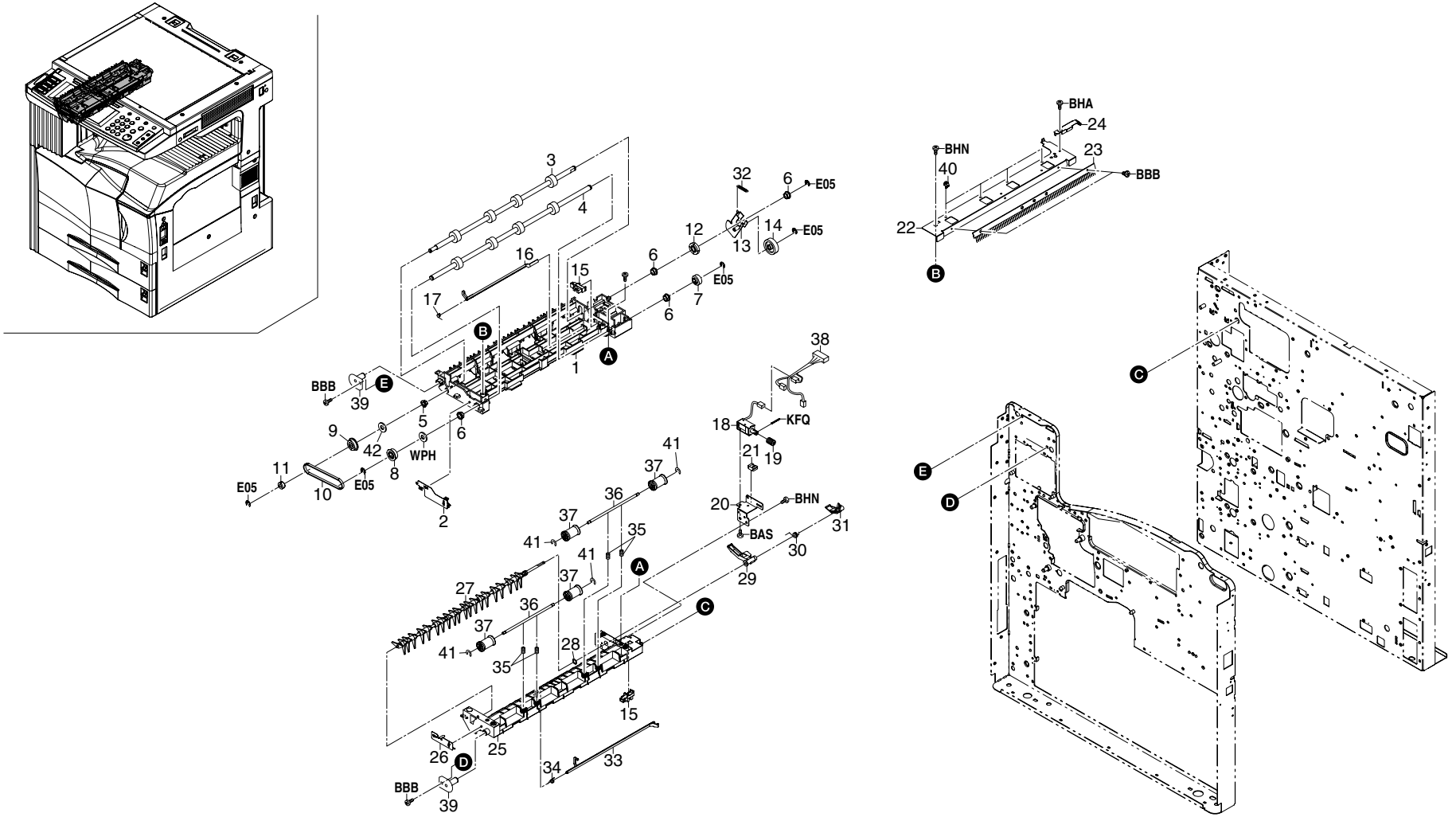
BHA
24
BHN
23
40
BBB
22
B
C
E
D
3
4
32
6
E05
12
14
13
E05
16
6
15
E05
17
7
6
B
A
1
38
BBB
E
39
18
KFQ
5
6
9
42
WPH
21
19
41
11
37
8
E05
E05
10
36
20
BHN
2
37
41
35
BAS
31
41
30
A
37
29
27
36
C
37
41
28
35
15
26
D
25
34
33
BBB
39

FIG. 8 PAPER EXIT SECTION

SP	Ref.No.	Part.No.	Alternative.	Description	Quantity			
					110V	120V	230V	240V
⊙		2BJ93110		PARTS,EXIT UNIT SP (J)	1			
⊙		2BJ93100		PARTS,EXIT UNIT,SP		1	1	1
	1	•2BL21040		FRAME EXIT UP	1	1	1	1
	2	•2BL21170		PLATE EARTH EXIT F	1	1	1	1
⊙	3	•2BL21030		ROLLER FEED SHIFT	1	1	1	1
⊙	4	•2BJ21050		ROLLER EJECT J	1			
⊙	4	•2BL21020		ROLLER EXIT		1	1	1
⊙	5	•73210450		BUSH, 6	1	1	1	1
⊙	6	•67322230		BUSHING 8	4	4	4	4
⊙	7	•2BL21430		GEAR EXIT Z20	1	1	1	1
⊙	8	•2BL21230		PULLEY EXIT T30	1	1	1	1
⊙	9	•2BL21211		PULLEY ONEWAY T30	1	1	1	1
⊙	10	•2BL21240		BELT EXIT P2M212	1	1	1	1
	11	•2FG22120	302FG22120	COLLAR BELT DRIVE	1	1	1	1
⊙	12	•2BL21220		GEAR EXIT Z19	1	1	1	1
	13	•2BL21200		JOINT EXIT	1	1	1	1
⊙	14	•2BL21390		GEAR EXIT JOINT Z26S	1	1	1	1
⊙	15	•35327400		SWITCH,FEED	2	2	2	2
⊙	16	•2BL21130		ACTUATOR EXIT L	1	1	1	1
	17	•2BL21260		SPRING ACTUATOR L	1	1	1	1
⊙	18	•3AZ21890		SOLENOID,FEED SHIFT	1	1	1	1
⊙	19	•2BL21440		SPRING EXIT CHANGE	1	1	1	1
	20	•2BL21190		BKT SOLENOID	1	1	1	1
	21	•M2104350		EDGING,EDS-0607M(KITAGAWA)	1	1	1	1
	22	•2BL21160		BKT DISCHARGER	1	1	1	1
⊙	23	•34821100		STATIC ELIMINATOR,EJECT	1	1	1	1
	24	•2BL21180		PLATE EARTH EXIT R	1	1	1	1
	25	•2BL21010		FRAME EXIT	1	1	1	1
	26	•2BL21470		PLATE EARTH CHANGE	1	1	1	1
⊙	27	•2BL21080		GUIDE EXIT CHANGE	1	1	1	1
⊙	28	•2BL21510		CUT WASHER 6	1	1	1	1
	29	•2BL21370		LEVER GUIDE CHANGE B	1	1	1	1
	30	•2BL21270		SPRING FEED SHIFT	1	1	1	1
	31	•2BL21100		LEVER GUIDE CHANGE	1	1	1	1
	32	•2BL21400		SPRING EXIT JOINT	1	1	1	1
⊙	33	•2BL21120		ACTUATOR EXIT R	1	1	1	1
	34	•2BL21250		SPRING ACTUATOR R	1	1	1	1
	35	•2BL21070		SPRING EXIT PULLEY	4	4	4	4
⊙	36	•2BL21060		SHAFT EXIT PULLEY	2	2	2	2
	37	•2BL21450		PULLEY EXIT B	4			
	37	•2BL21520		PULLEY EXIT C		4	4	4
	38	•2BJ27160		WIRE EJECT(C)	1	1	1	1
	39	•2BL21420		PIN EXIT	2	2	2	2
	40	•M2105740		MINIATURE CLAMP,UAMS-05S-2	4	4	4	4
⊙	41	•2BL16290		CUT WASHER 3	4	4	4	4
⊙	42	•C2891120		POLYESTER SLIDER WASHER 6.2X12X0.25T	1	1	1	1

• Parts with "•" are component parts or sub-assemblies of the assembly appearing immediately above them.
• Parts with "⊙" indicates the spare parts.

• Parts with "• •" are component parts or sub-assembly with "•" appearing immediately above them.

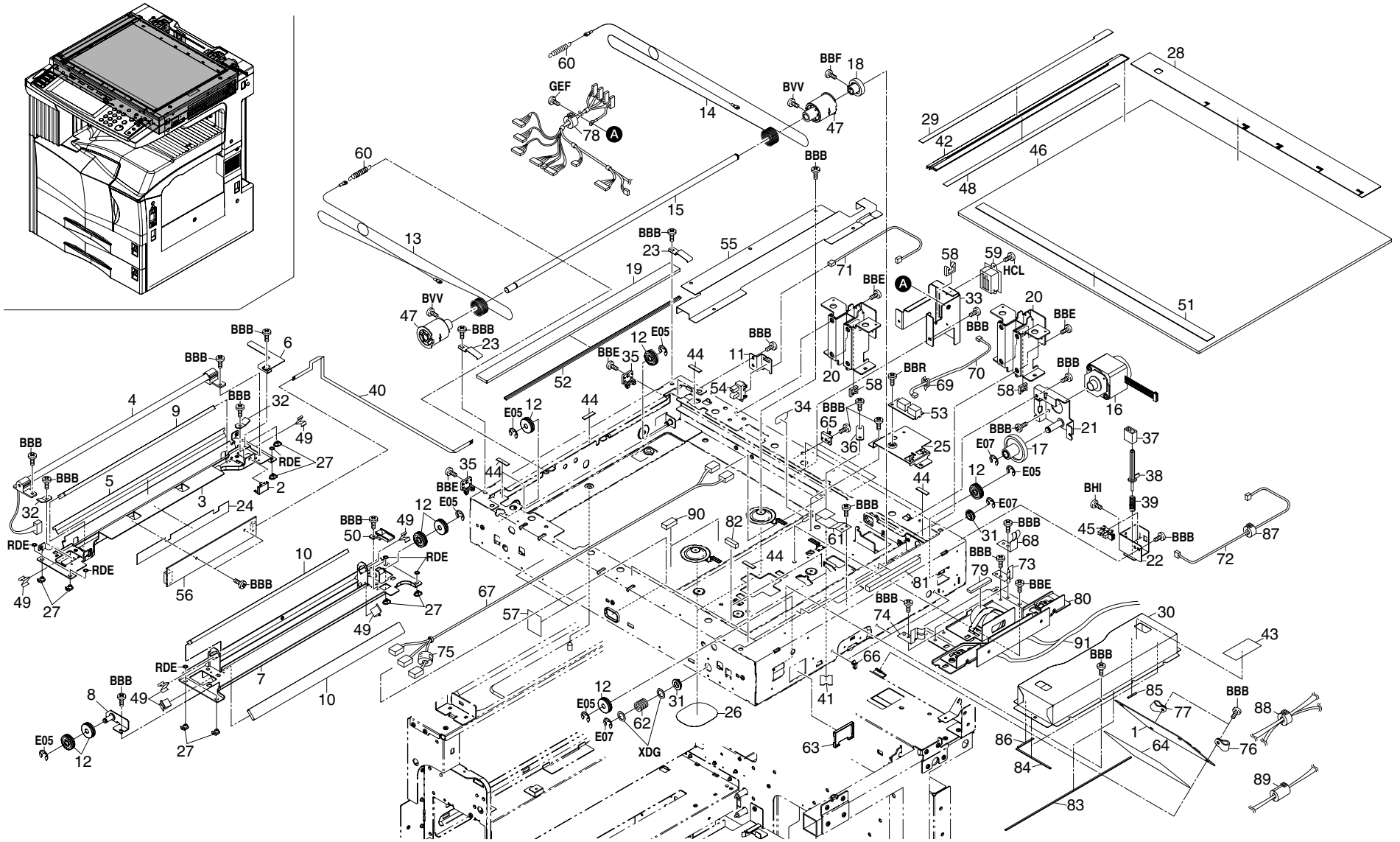
60
GEF
78
A
14
BBF
18
BVV
47
28
29
42
46
48
51
BBB
15
13
23
55
19
71
58
59
HCL
BBE
33
20
BBR
69
70
16
21
37
38
39
BHI
45
22
87
72
BVV
47
BBB
23
6
4
9
32
49
RDE
27
2
5
3
24
40
52
12
E05
35
44
11
54
34
65
36
53
25
17
E07
31
68
73
79
80
74
81
61
82
90
57
67
10
7
8
50
56
75
91
30
43
85
77
88
76
1
64
86
84
83
89
62
XDG
63
41
66
26
BBE

FIG. 9 OPTICAL SECTION

2FG/2FF/2FD-1

SP	Ref.No.	Part.No.	Alternative.	Description	Quantity			
					110V	120V	230V	240V
⊙	1	2FG01030		SCANNER DRIVE ASS'Y	1	1	1	1
	2	2AV12080		GUIDE FFC1	1	1	1	1
	3	2AV12091		MIRROR FRAME A	1	1	1	1
⊙	4	2AV12100		LAMP,SCANNER	1	1	1	1
	5	2AV12110		REFLECTOR,SCANNER	1	1	1	1
	6	2AV12121		LIGHT SHIELD,PI	1	1	1	1
	7	2AV12130		MIRROR FRAME B	1	1	1	1
	8	2AV12140		ADJUSTING PLATE B,MIRROR FRAME	1	1	1	1
⊙	9	2AV12150		MIRROR A	1	1	1	1
⊙	10	2AV12160		MIRROR B	2	2	2	2
	11	2AV12170		MOUNT,SCANNER PI	1	1	1	1
	12	2AV12180		PULLY,SCANNER	8	8	8	8
⊙	13	2AV12190		FRONT WIRE,SCANNER	1	1	1	1
⊙	14	2AV12200		REAR WIRE,SCANNER	1	1	1	1
	15	2AV12210		SHAFT,SCANNER DRIVE	1	1	1	1
⊙	16	2AV12221		MOTOR,SCANNER	1	1	1	1
⊙	17	2AV12230		GEAR 44/16	1	1	1	1
⊙	18	2AV12240		GEAR 26	1	1	1	1
⊙	19	2FG12020		CONTACT GLASS ADF	1	1	1	1
	20	2AV12260		MOUNT BASE,DF HINGE	2	2	2	2
	21	2AV12270		MOUNT,SCANNER MOTOR	1	1	1	1
⊙	22	2FG12050		MOUNT RELEASE SWITCH	1	1	1	1
	23	2AV12300		HOLDER,ADF CONTACT GLASS	2	2	2	2
	24	2AV12320		FILM A,MIRROR FRAME	1	1	1	1
	25	2FG12010		MOUNT ORIGINAL DETECTION	1	1	1	1
	26	2AV12430		LOWER SEAL,SCANNER	2	2	2	2
⊙	27	2AV12450		SLIDER,SCANNER	8	8	8	8
⊙	28	2AV12460		REAR ORIGINAL SIZE INDICATOR(METRIC)	1		1	1
⊙	28	2AV12470		REAR ORIGINAL SIZE INDICATOR(INCH)		1		
⊙	29	2AV12481		LABEL,ORIGINAL SIZE INDICATOR(METRIC)	1		1	1
⊙	29	2AV12491		LABEL,ORIGINAL SIZE INDICATOR(INCH)		1		
	30	2AV12520		COVER,ISU	1	1	1	1
⊙	31	72914480		REAR BUSHING,DEVELOPING ROLLER (B)	2	2	2	2
	32	2AV12350		STOPPER,WIRE	2	2	2	2
	33	2BJ26180		MOUNT DF CONNECTOR	1	1	1	1
⊙	34	3AL08590		UPPER SHEET B,CONVEYING PULLEY	1	1	1	1
	35	18512340		GUIDE,SCANNER WIRE	2	2	2	2
	36	2AC12300		HOLDER FFC	1	1	1	1
⊙	37	2FG12060		GUIDE RELEASE SWITCH	1	1	1	1
⊙	38	2C912640		SHAFT RELEASE SWITCH	1	1	1	1
⊙	39	2C912650		SPRING RELEASE SWITCH	1	1	1	1
	40	2FG27100		WIRE INVERTER	1	1	1	1
	41	2AR12200		FILM,FFC	1	1	1	1
⊙	42	2A305070		LEFT ORIGINAL SIZE INDICATOR	1	1	1	1
⊙	43	2A105180		LABEL,CAUTION CONTACT GLASS	1	1	1	1
⊙	44	29812291		CUSHION,CONTACT GLASS	9	9	9	9
⊙	45	2C927210		SENSOR 248NL1	1	1	1	1
⊙	46	35912010		CONTACT GLASS	1	1	1	1
⊙	47	35912060		PULLEY,SCANNER DRUM	2	2	2	2
	48	2BC12130		STANDARD PLATE,SHADING	1	1	1	1
	49	2BC12190		SPRING,MIRROR HOLDER	6	6	6	6
	50	35912360		GUIDE FFC2	1	1	1	1
⊙	51	35912490		FRONT ORIGINAL SIZE INDICATOR	1	1	1	1
⊙	52	35912531		SPONGE,ORIGINAL SIZE INDICATOR	1	1	1	1
⊙	53	2C927090		SENSOR ORIGINAL	1	1	1	1
⊙	54	72127100		PI SWITCH,OPTICAL SECTION	1	1	1	1
	55	2AV12310		COVER,OPERATION UNIT WIRE	1	1	1	1
⊙	56	2AV28080		INVERTER PCB	1	1	1	1
	57	2BJ12080		FRONT FILM SCANNER	2	2	2	2
	58	M2104220		EDGING,EDS-1717U	3	3	3	3
	59	J0388460		RECEPTACLE,52918-4615(MOLEX)	1	1	1	1
	60	2AV12500		SPRING,SCANNER TENSION	2	2	2	2
	61	2BJ12040		GROUND PLATE A SCANNER	1	1	1	1
	62	34918200		SPRING,THRUST	1	1	1	1
⊙	63	2FG04020		COVER TOTAL COUNTER	1	1	1	1
	64	2BJ27330		SHEET SCANNER DRIVE	1	1	1	1
	65	2BJ12030		HOLDER SCANNER PCB	2	2	2	2
	66	M2109330		WIRE SADDLE,YMC-10-0(KITAGAWA)	3	3	3	3
	67	2FG27340		WIRE OPERATION(C)	1	1	1	1
	68	2BJ12050		GROUND PLATE B SCANNER	2	2	2	2
	69	M2105740		MINIATURE CLAMP,UAMS-05S-2	1	1	1	1
	70	2FG27350		WIRE ORIGINAL SENSOR	1	1	1	1
	71	2AR27520		WIRE,SCANNER SWITCH	1	1	1	1
	72	2BJ27170		WIRE RELEASE SW	1	1	1	1
	73	2BJ12070		GROUND PLATE D SCANNER	1	1	1	1
	74	2BJ12060		GROUND PLATE C SCANNER	1	1	1	1
	75	2FG27510		CORE ATFC-201010	1	1	1	1
	76	M7005010		CLAMP,EMT-3N(TAKEUCHI)	1	1	1	1
	77	M7005020		CLAMP,EMT-6N(TAKEUCHI)	1	1	1	1
	78	2AV27440		CORE 15-26X13	1	1	1	1

• Parts with "•" are component parts or sub-assemblies of the assembly appearing immediately above them.
• Parts with "⊙" indicates the spare parts.

• Parts with "• •" are component parts or sub-assembly with "•" appearing immediately above them.

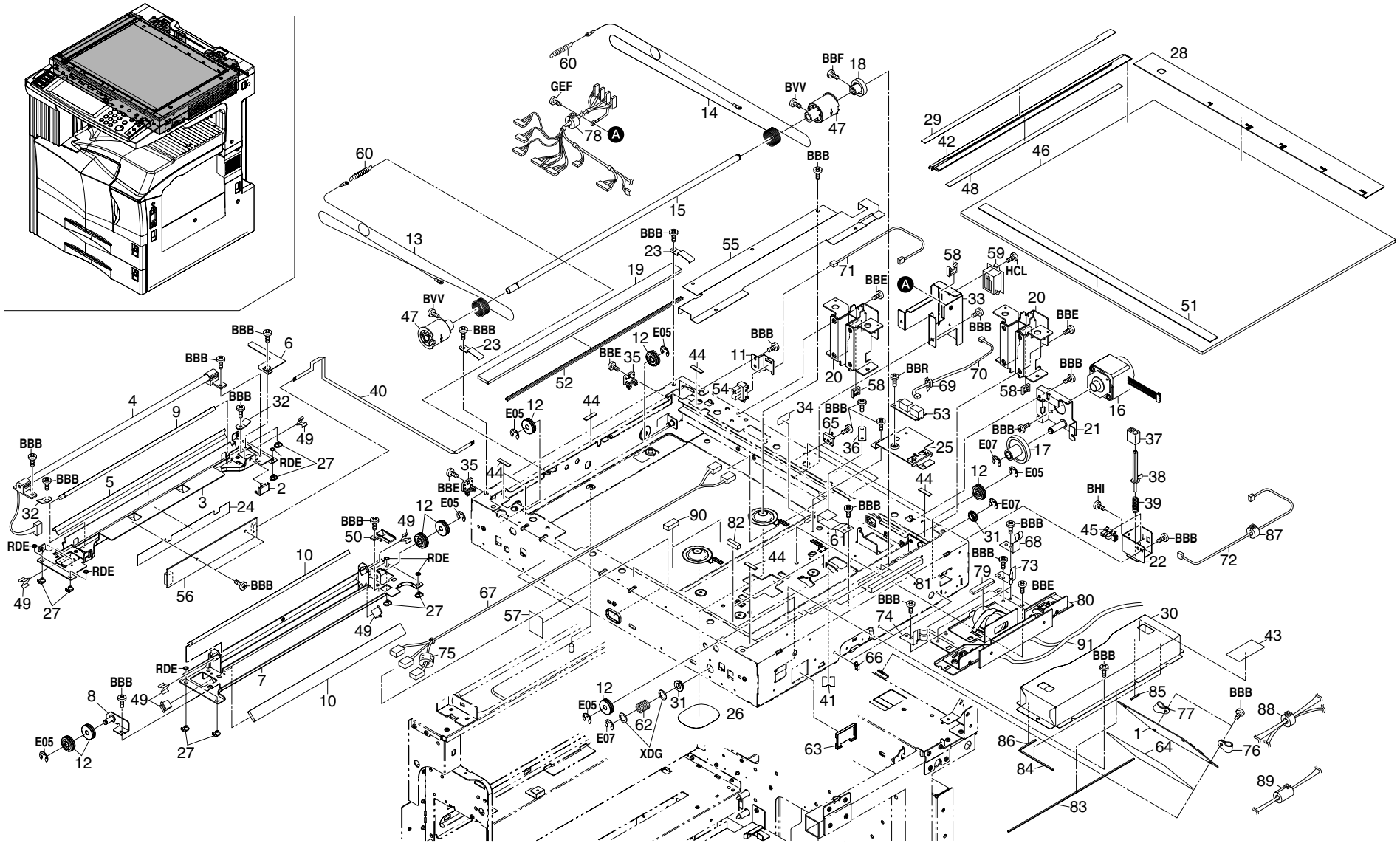
60
GEF
78
A
14
BBF
18
BVV
47
BBB
15
13
60
BVV
47
BBB
23
19
55
BBB
23
BBE
35
12
E05
44
11
BBB
52
54
40
BBB
6
BBB
4
9
BBB
32
49
RDE
27
2
BBB
5
3
24
32
RDE
RDE
49
27
56
BBB
10
BBB
50
49
12
E05
RDE
27
49
67
57
75
RDE
7
10
BBB
8
49
E05
12
27
12
E05
62
E07
XDG
31
26
63
41
BBB
90
82
44
61
BBB
31
68
BBB
73
79
81
BBE
80
BBB
74
66
91
BBB
30
43
85
77
BBB
88
1
64
76
86
84
83
89
BBB
87
72
BHI
39
45
BBB
22
37
38
BBB
21
E07
17
E05
12
44
BBB
65
34
36
25
53
BBR
69
70
58
20
BBE
A
58
59
HCL
33
20
BBE
BBB
58
16
BBB
51
29
42
46
48
28

FIG. 9 OPTICAL SECTION

SP	Ref.No.	Part.No.	Alternative.	Description	Quantity			
					110V	120V	230V	240V
	79	2FG27560		GASKET CCD A	1	1	1	1
⊙	80	2FG93160		PARTS,ASS'Y ISU,SP	1	1	1	1
	81	2FG27570		GASKET CCD B	2	2	2	2
	82	2FG27580		GASKET CCD C	2	2	2	2
	83	2FG27600		GASKET LID CCD A	1	1	1	1
	84	2FG27610		GASKET LID CCD B	2	2	2	2
	85	2FG27620		GASKET LID CCD C	1	1	1	1
	86	2FG27630		GASKET LID CCD D	1	1	1	1
	87	2FG27640		CORE ATFC-16-8-16	1	1	1	1
	88	2A627940		CORE 10-20X10	1	1	1	1
	89	M70C0010		FERRITE CORE,SFT-59SN(TAKEUCHI)	1	1	1	1
	90	2FG27540		GASKET MULTIPORT B	2	2	2	2
	91	2BJ27040		WIRE CCD PCB	1	1	1	1

• Parts with "•" are component parts or sub-assemblies of the assembly appearing immediately above them.
• Parts with "⊙"" indicates the spare parts.

• Parts with "• •" are component parts or sub-assembly with "•" appearing immediately above them.

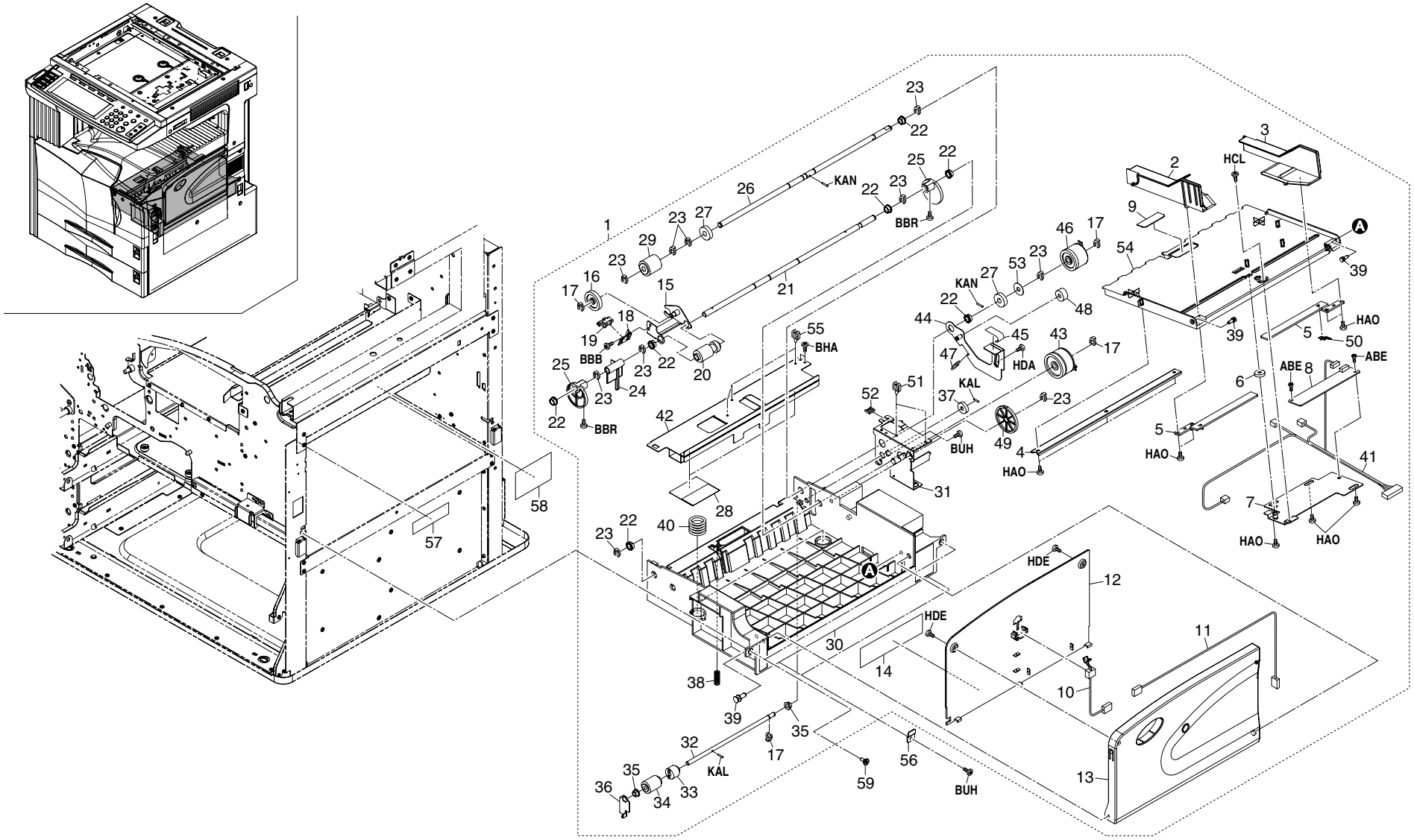
1
2
3
4
5
6
7
8
9
10
11
12
13
14
15
16
17
18
19
20
21
22
23
24
25
26
27
28
29
30
31
32
33
34
35
36
37
38
39
40
41
42
43
44
45
46
47
48
49
50
51
52
53
54
55
56
57
58
59
HCL
HAO
ABE
KAN
BBR
BBB
BHA
HDA
KAL
BUH
HDE

FIG. 10 BYPASS UNIT

SP	Ref.No.	Part.No.	Alternative.	Description	Quantity			
					110V	120V	230V	240V
⊙	1	2BL93432		BYPASS UNIT(C),SP	1		1	1
⊙	1	2BL93442		BYPASS UNIT(I),SP		1		
	2	•2BL06660		FRONT CURSOR BYPASS	1	1	1	1
	3	•2BL06670		REAR CURSOR BYPASS	1	1	1	1
	4	•2BL06650		STAY LIFTPLATE	1	1	1	1
⊙	5	•33907100		RACK,CASSETTE	2	2	2	2
⊙	6	•65914120		GEAR 18,IDLE DEVELOPING	1	1	1	1
	7	•3A206461		MOUNT,BYPASS PCB	1	1	1	1
⊙	8	•2FG01020		SIZE DETECTION ASS'Y	1	1	1	1
	9	•34806490		FRICTION PLATE,BYPASS LEADING FEED	1	1	1	1
⊙	10	•2CJ06260		SWITCH,BYPASS SIZE DETECTION	1	1	1	1
	11	•2BL27210		WIRE BYPASS TRAY	1	1	1	1
⊙	12	•2BL06610		TABLE BYPASS	1	1	1	1
⊙	13	•2BL06600		COVER BYPASSTRAY	1	1	1	1
⊙	14	•2BL05010		LABEL BYPASSSIZE(C)	1		1	1
⊙	14	•2BL05060		LABEL BYPASSSIZE(I)		1		
	15	•3A206130		JOINT,BYPASS PICKUP	1	1	1	1
⊙	16	•72321350		GEAR 30, FD EJECT IDLE	1	1	1	1
⊙	17	•2BC06980		STOPPER 5	4	4	4	4
	18	•3A206210		MOUNT,BYPASS PE SWITCH	1	1	1	1
⊙	19	•2C927210		SENSOR 248NL1	1	1	1	1
⊙	20	•2BJ06010		PULLEY FEED A	1	1	1	1
	21	•2BL06760		SHAFT BYPASSCAM	1	1	1	1
⊙	22	•67322230		BUSHING 8	7	7	7	7
⊙	23	•2BC06910		STOPPER 6	10	10	10	10
⊙	24	•3A206100		ARM,BYPASS PE	1	1	1	1
⊙	25	•2BL06680		CAM BYPASS	2	2	2	2
	26	•2BL06770		SHAFT BYPASS	1	1	1	1
⊙	27	•45729416	29415100	GEAR,TONER ROLLER	2	2	2	2
	28	•2BL06880		FILM BYPASS	2	2	2	2
⊙	29	•61706770		UPPER PULLEY,BYPASS	1	1	1	1
	30	•2BL06511		BASE BYPASSUNIT(1)	1	1	1	1
	31	•2BL06690		MOUNT BYPASSDRIVE	1	1	1	1
	32	•2BL06750		SHAFT RETARD	1	1	1	1
⊙	33	•33906430		TORQUE LIMITER,BYPASS	1	1	1	1
⊙	34	•2AR07230		PULLEY,SEPARATION	1	1	1	1
⊙	35	•73210450		BUSH, 6	2	2	2	2
	36	•3A206170		HOLDER,RETARD	1	1	1	1
⊙	37	•66006810		GEAR,16 BYPASS PULLEY	1	1	1	1
	38	•2BL06860		SPRING RETARD	1	1	1	1
⊙	39	•66007310		PIN,CASSETTE WORK PLATE	3	3	3	3
	40	•2BL07860		SPRING BYPASS	2	2	2	2
	41	•2BL27150		WIRE BYPASS UNIT	1	1	1	1
	42	•2BL06530		COVER BYPASSUNIT	1	1	1	1
⊙	43	•2FG27170		CLUTCH FEED B	1	1	1	1
	44	•2BL06850		JOINT RETARD	1	1	1	1
	45	•2BL05040		LABEL RETARD	1	1	1	1
⊙	46	•2FG27160		CLUTCH FEED	1	1	1	1
	47	•2BL06870		SPRING JOINTRETARD	1	1	1	1
⊙	48	•33906160		GEAR 16,PAPER FEED	1	1	1	1
⊙	49	•2BL06720		GEAR 55/15	1	1	1	1
	50	•33907110		TERMINAL,PAPER SIZE PCB	1	1	1	1
	51	•M2105740		MINIATURE CLAMP,UAMS-05S-2	2	2	2	2
	52	•M2104210		EDGING,EDS-2	1	1	1	1
	53	•2BL06990		STOPPER GEAR 8-25	1	1	1	1
	54	•2BL06642		LIFTPLATE BYPASS	1	1	1	1
	55	•M2105210		MINI CLAMP,UAMS-02WL-0(KITAGAWA)	3	3	3	3
	56	2BL06890		PLATE BYPASS HOLD	2	2	2	2
	57	3A205010		LABEL,CAUTION GEAR	1	1	1	1
	58	2BL05100		LABEL BYPASS JAM R	1	1	1	1
	59	2BL04410		PIN COVER	2	2	2	2

• Parts with "•" are component parts or sub-assemblies of the assembly appearing immediately above them.
• Parts with "⊙" indicates the spare parts.

• Parts with "• •" are component parts or sub-assembly with "•" appearing immediately above them.

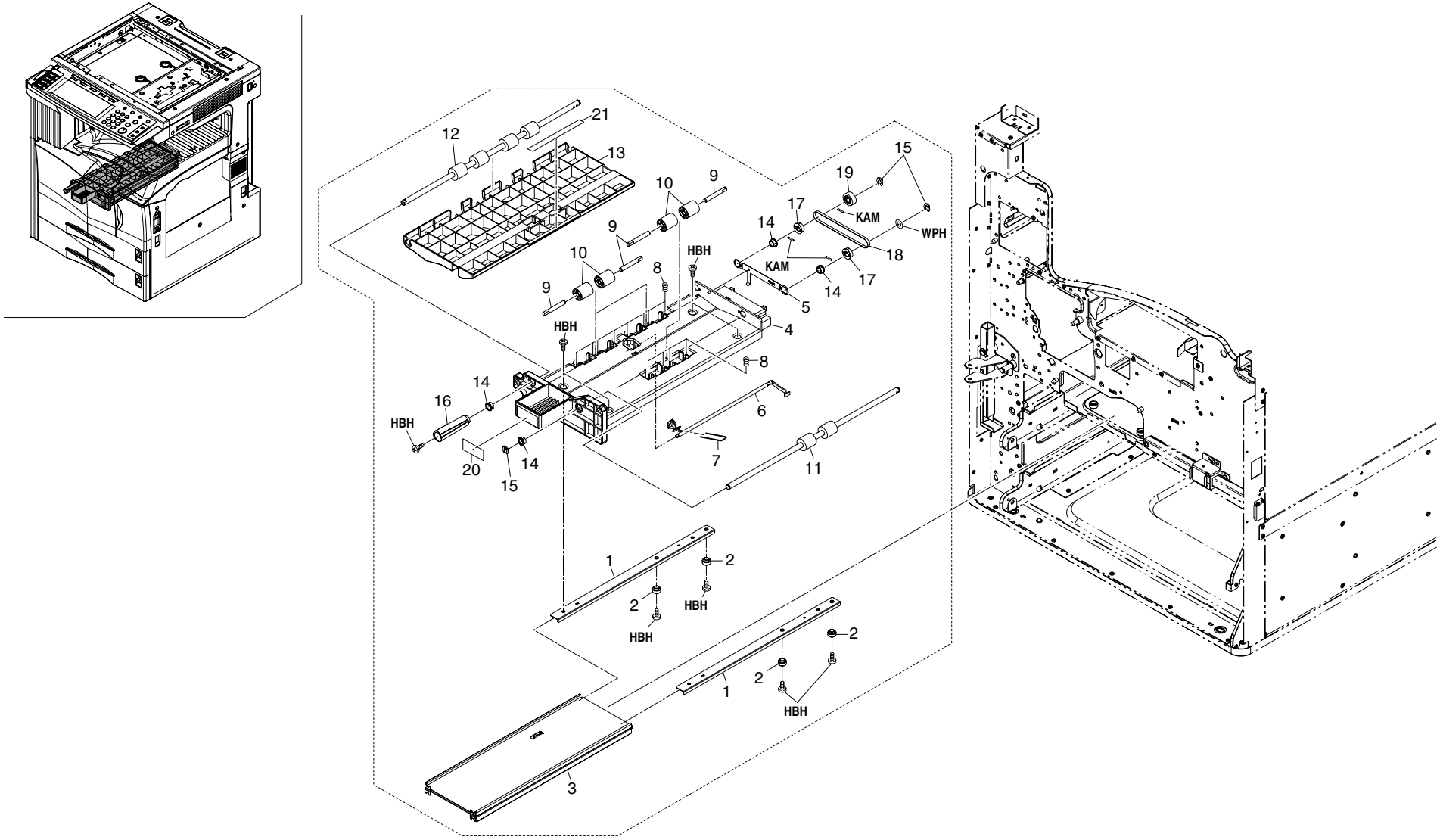
21
12
13
10
9
15
19
17
KAM
WPH
14
18
HBH
8
KAM
17
14
5
4
6
16
20
15
7
11
1
2
3

FIG. 11 BYPASS FEED UNIT

SP	Ref.No.	Part.No.	Alternative.	Description	Quantity			
					110V	120V	230V	240V
⊙		2BL93390		PARTS,BYPASS FEED UNIT	1	1	1	1
	1	2BL06570		MOUNT RAIL	2	2	2	2
	2	2BL06590		PULLEY RAIL	4	4	4	4
	3	2BL06580		RAIL BYPASS	1	1	1	1
	4	2BL06500		BASE BYPASSFEED(1)	1	1	1	1
	5	2BL06790		GROUNDPLATE BYPASS	1	1	1	1
⊙	6	2BL06730		ACTUATOR BYPASSFEED	1	1	1	1
⊙	7	2BL06800		SPRING BYPASS	1	1	1	1
	8	2BL06780		SPRING BYPASSFEED	12	12	12	12
	9	2BL06740		SHAFT BYPASSFEED	6	6	6	6
⊙	10	33906660		RIGHT PULLEY,FEED	6	6	6	6
⊙	11	2BL06560		ROLLER4 BYPASSFEED	1	1	1	1
⊙	12	2BL06540		ROLLER2 BYPASSFEED	1	1	1	1
	13	2BL06520		UPPERGUIDE BYPASS	1	1	1	1
⊙	14	67322230		BUSHING 8	4	4	4	4
⊙	15	2BC06910		STOPPER 6	3	3	3	3
	16	2BL06830		DIAL BYPASSFEED	1	1	1	1
⊙	17	2BL06820		PULLEY25 BYPASSFEED	2	2	2	2
⊙	18	2BL06810		BELT BYPASSFEED	1	1	1	1
⊙	19	36722860		GEAR 18	1	1	1	1
	20	2BL05020		FRONT LABEL BYPASS	1	1	1	1
	21	2BL05030		UPPER LABEL BYPASS	1	1	1	1

• Parts with "•" are component parts or sub-assemblies of the assembly appearing immediately above them.
• Parts with "⊙"" indicates the spare parts.

• Parts with "• •" are component parts or sub-assembly with "•" appearing immediately above them.

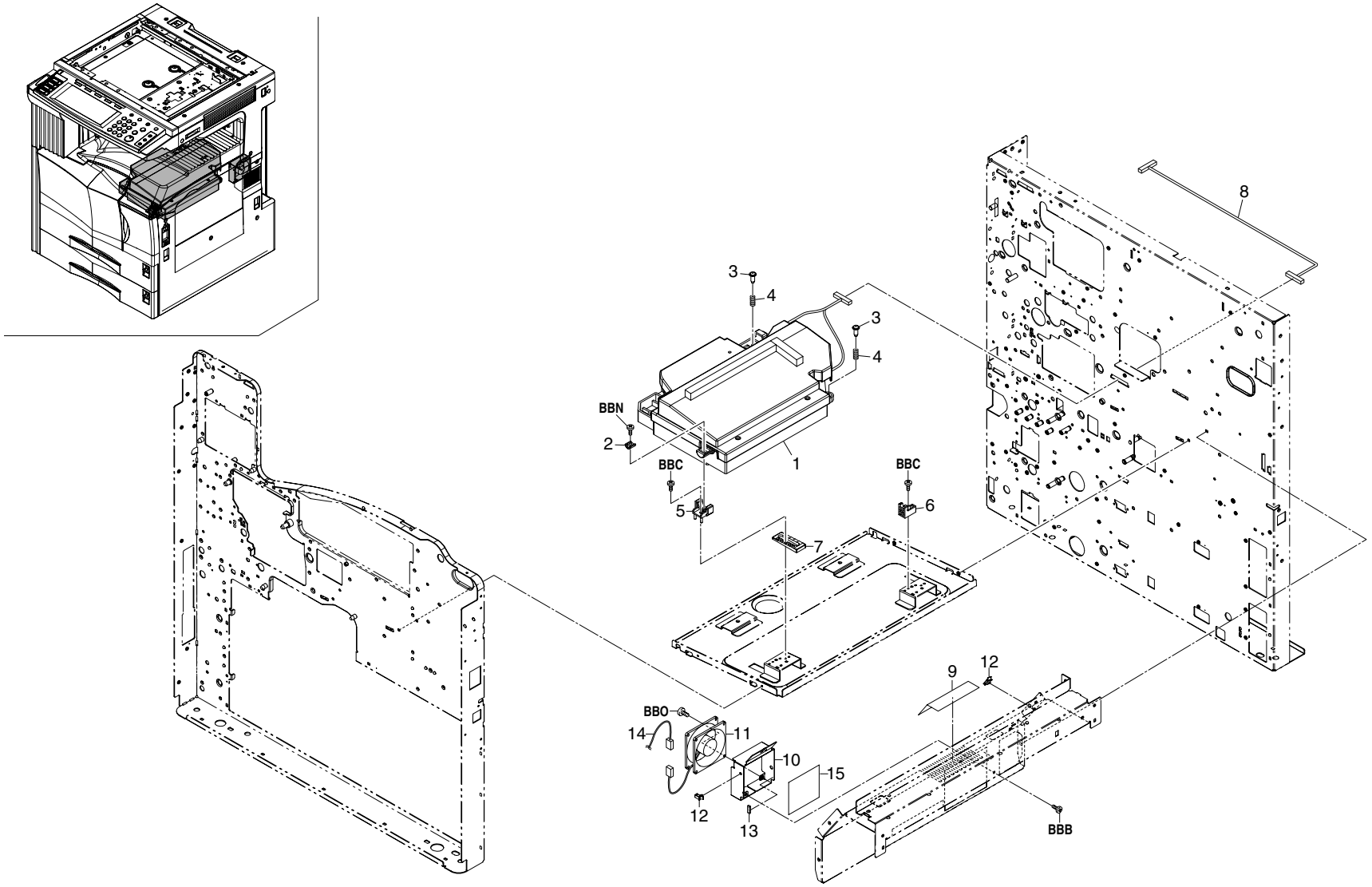
3
4
3
4
BBN
2
BBC
1
BBC
5
6
7
8
9
12
BBO
14
11
10
15
12
13
BBB

FIG. 12 LASER SCANNER UNIT

SP	Ref.No.	Part.No.	Alternative.	Description	Quantity			
					110V	120V	230V	240V
⊙	1	2BL93141		LK-700	1	1	1	1
	2	2BL13120		FRONT MOUNT HOUSING	1	1	1	1
	3	76610320		PIN TENSION PULLEY	2	2	2	2
	4	2BL13290		SPRING FIX LSU	2	2	2	2
	5	2BL13070		FRONT ADJUSTING LSU	1	1	1	1
	6	2BL13060		REAR ADJUSTING LSU	1	1	1	1
	7	2BL13250		ADJUSTING PLT LSU	1	1	1	1
	8	2BJ27200		WIRE LSU(C)	1	1	1	1
	9	2BL23090		FILTER DUST SHIELD	1	1	1	1
	10	2BL02230		MOUNT FAN	1	1	1	1
⊙	11	2BL27700		FAN COOLING(60-25)	1	1	1	1
	12	M2109330		WIRE SADDLE,YMC-10-0(KITAGAWA)	2	2	2	2
	13	2BL02240		SPONGE FAN	1	1	1	1
	14	2BL27330		WIRE DLP FAN	1	1	1	1
	15	2BL23160		FILTER DUST SHIELD B	1	1	1	1

• Parts with "•" are component parts or sub-assemblies of the assembly appearing immediately above them.
• Parts with "⊙"" indicates the spare parts.

• Parts with "• •" are component parts or sub-assembly with "•" appearing immediately above them.

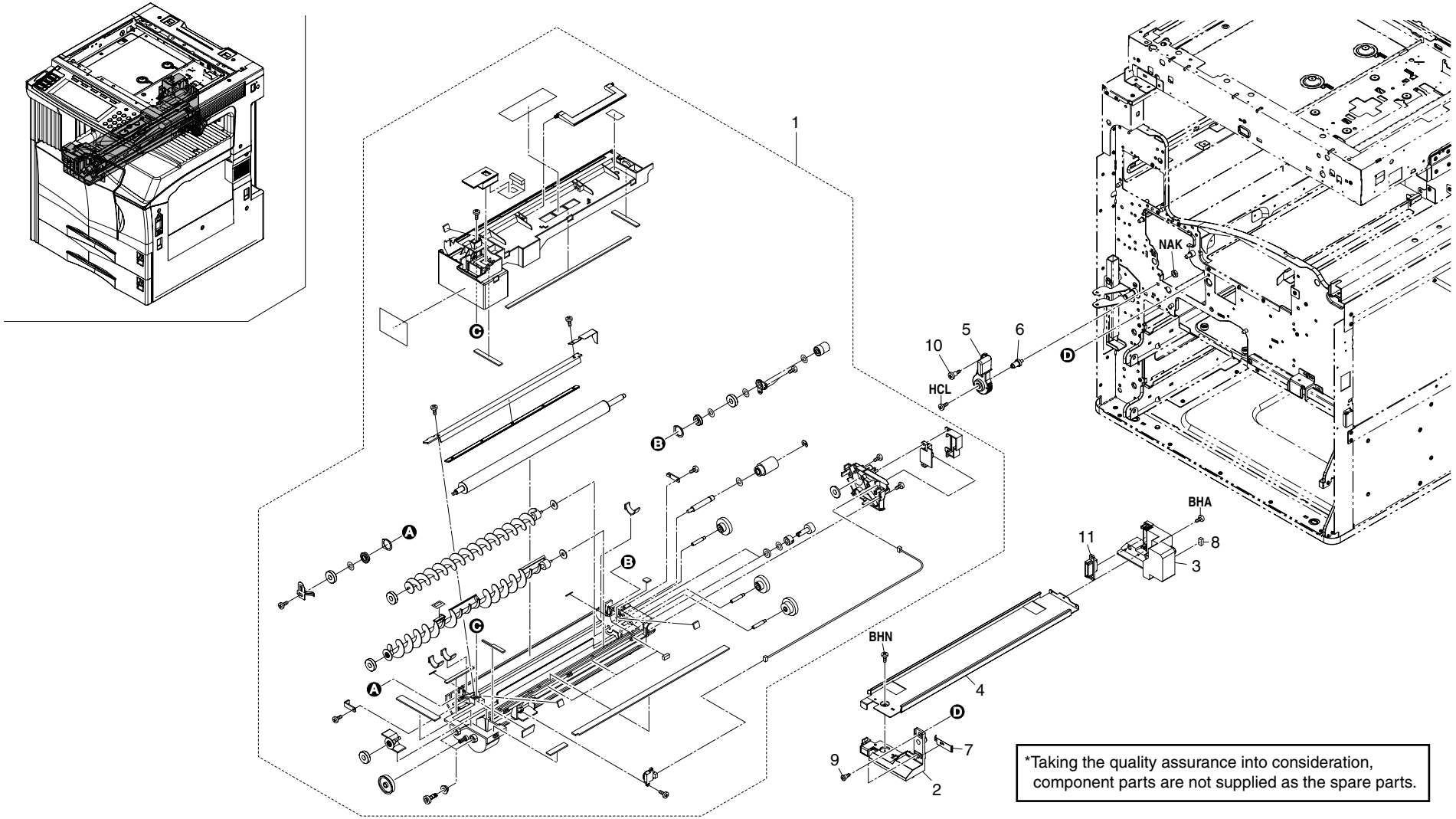
1
NAK
10
5
6
HCL
BHA
11
8
3
BHN
4
7
9
2
*Taking the quality assurance into consideration, component parts are not supplied as the spare parts.

FIG. 13 DEVELOPING SECTION

SP	Ref.No.	Part.No.	Alternative.	Description	Quantity			
					110V	120V	230V	240V
⊙	1	2BJ93010		PARTS,DEVELOPER ASS'Y	1	1	1	1
	2	2BL14180		FRONT ARM RAIL	1	1	1	1
	3	2BL14190		REAR ARM RAIL	1	1	1	1
	4	2BL14200		RAIL DLP	1	1	1	1
	5	2BL14210		LEVER DLP	1	1	1	1
	6	2BL14220		PIN LEVER DLP	1	1	1	1
	7	2BL14350		GROUND PLATE RAIL	1	1	1	1
	8	2BL14480		SEAL WIRE	1	1	1	1
	9	2BL14660	5MMT243SZ004	STUD SCREW S	2	2	2	2
	10	36006140		PIN,JAM REMOVEMENT DIAL	1	1	1	1
	11	J7340100		RECEPTACLE,9715S-10A(IRS)	1	1	1	1

• Parts with "•" are component parts or sub-assemblies of the assembly appearing immediately above them.
• Parts with "⊙"" indicates the spare parts.

• Parts with "• •" are component parts or sub-assembly with "•" appearing immediately above them.