NM-BC25BLACK

SPECIFICATIONS

*Please note: The inch sizes stated are just an indication, combined with the weight and VESA sizes. The maximum weight and VESA size are absolute restrictions for the products and should not be exceeded.





NM-BC25BLACK

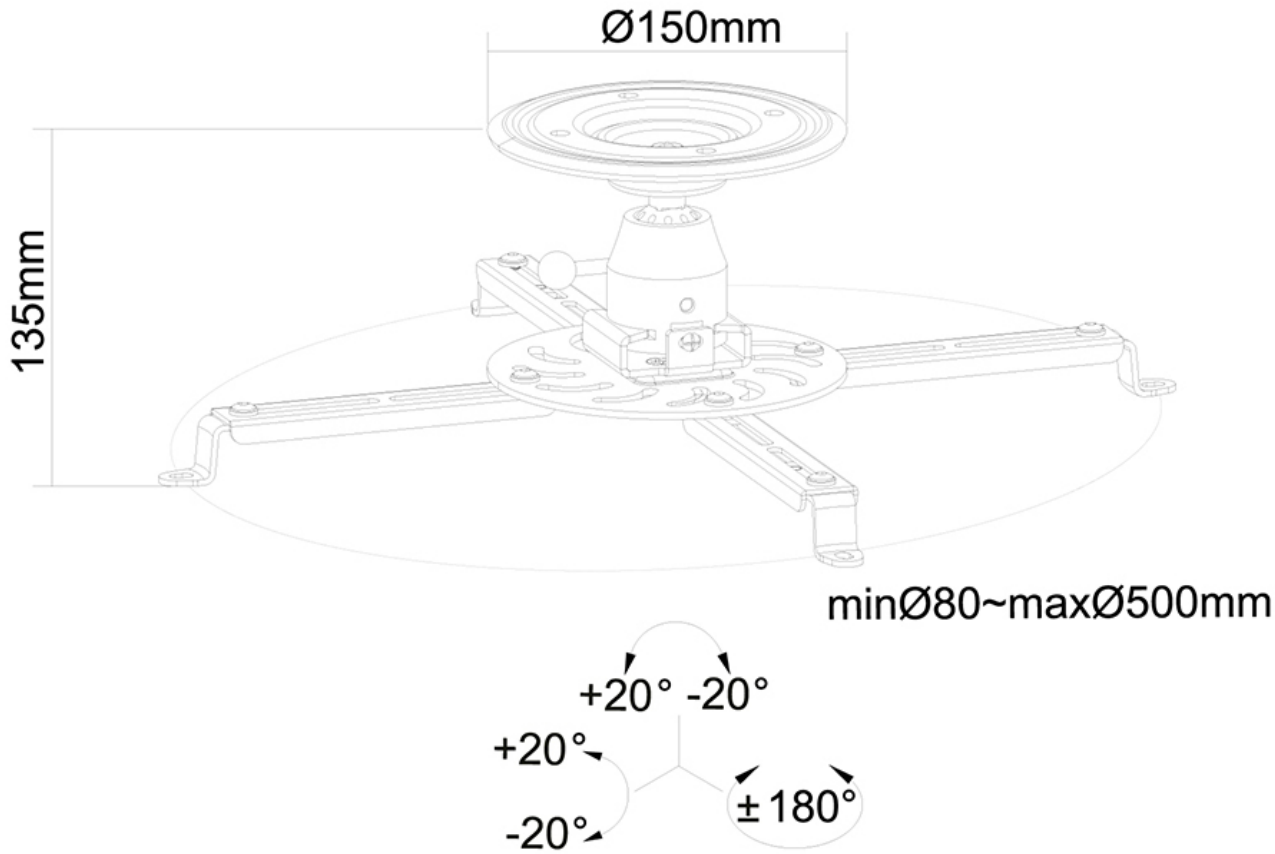

Neomounts