SHARP

PN-H701
Professional 70” 4K Ultra HD Display



VISUAL QUALITY ON A GRAND SCALE

No one likes to compromise /This is Why our 4K Ultra HD display is the ideal choice if you want outstanding style and precision.

You only get one chance to make a real impact /This is Why we created a stylishly ultra thin and light 70” 4K Ultra HD display.

The PN-H701 is 70-inch-class 4K Ultra HD (3,480 x 2,160 resolution) monitor that offers the perfect combination of an exceptionally slim and stylish design and crystal clear pictures.

Brilliant Image Quality

Featuring Sharp’s state of the art UV²A LCD panel technology, the PN-H701 is an outstanding communication platform. With its huge screen size and super-high-resolution image quality it can showcase all manner of content, from detailed text to beautifully textured graphics.

On-screen content is rendered in superbly detailed ultra high definition. With movies and still images displayed at up to 4K Ultra HD, which is 4x the resolution of 1080p full HD, there is no pixilation. Instead you get to see subtle textures and much finer details with crisp image rendition even at close range.

So whether in a retail, office, conference, or public setting it delivers all the detail, depth, and clarity needed to make an unforgettable impact on any audience.

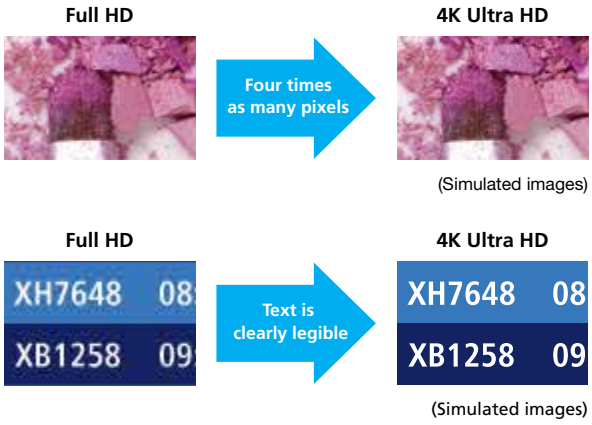

MORE DETAIL, MORE IMPACT

Clearly Brighter Colours

The PN-H701’s features an effective anti-glare screen coating whilst still allowing for crisp and vivid colours to shine through. It’s sophisticated appearance and ergonomic design make it the perfect lifestyle monitor for boardroom appeal within corporate environments.

4K Upscaling and Offset Function

The PN-H701 is equipped with an advanced upscaling engine that can transform standard full HD source content into 4K images – in real-time. When full HD content is expanded to 4K, an offset function works to minimise blurriness and pixilation, making images much smoother than with standard upscaling.

4K Transfer at 60 fps via Single Cable

The PN-H701 supports the features defined in HDMI™ 2.0, which enable 4K Ultra HD 60p video signals to be transmitted conveniently over a single cable. The monitor features four HDMI 2.0 inputs that enable easy switching between multiple sources.

KEEP YOUR DATA SAFE

USB Media Player*1



The PN-H701 can play slideshows of promotional or informational content without the need for a PC. A built-in USB media player allows playback of 4K Ultra HD photos*2, full HD videos, and music stored on a connected USB memory device*3. For added security, it has a USB flash drive cover, so your data storage device is physically protected from being accidentally removed or stolen. Still images can also be saved to the display’s internal memory and played from there, without using USB media, and the media player can be set to play images automatically.

Choice of Installation Mode

The PN-H701 offers a choice of landscape or portrait installation, so you can select the best mode for your display content and usage. While portrait installation offers the look and impact of a poster, landscape installation is ideal for showing wide images.

*1 Supported media formats: JPEG for photos; MP4, M2TS, 3GP, and MOV for videos; and WAV, WMA, M4A, and MP3 for music.
*2 Supports input of photos with resolution equivalent to 8K (such photos are displayed at 4K).
*3 USB storage device sold separately.

A picture speaks a thousand words /This is Why we help you deliver the right message to the right people in the right way.

24/7 Operation
The PN-H701 is designed for around-the-clock use in demanding professional environments and delivers a sharp, clear picture even after long hours of continuous operation*4. Designed for very low power consumption, a built in temperature function monitors and regulates the displays brightness in accordance to its inner temperature level guarantying long-term durability, while preventing it from any damage.

LAN/RS-232C Control
Thanks to its LAN/RS-232C interface, the PN-H701 can be easily controlled and monitored centrally via a PC. You can remotely turn the monitor on or off, switch its input, or adjust the screen and settings.

SIMPLE, CENTRALISED CONTROL

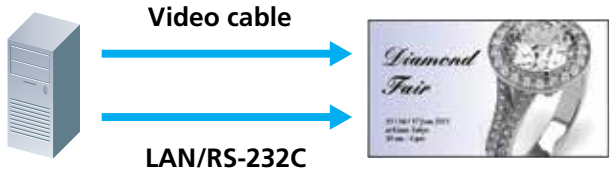

Stylish Design
The PN-H701 features an ultra slim 9mm (side); yet robust aluminium bezel. Its impressively sleek and elegant look makes it perfect for use anywhere – from the most sophisticated boardroom to really tough retail environments.

Ultra Thin and Lightweight
With its edge-lit LED backlighting, the PN-H701 has an extremely slimline and lightweight profile that makes it very easy to install and manage. It measures just 69 mm at its thickest point and weighs only 37 kg. So it can be attractively wall mounted, in either portrait or landscape mode, to create a real impact in offices, public spaces, stores, and other commercial areas.

Built-In Speakers
Powerful built speakers avoid the need for external speakers and keep the PN-H701 stylishly streamlined. The speakers emit sound from both sides of the screen, making them ideal for conveying audio information

*4 Image persistence may occur when the same static image is continuously displayed for extended periods of time. Image persistence can be gradually removed by displaying a video or moving graphics.



GALLERIES AND MUSEUMS



UPSCALE RETAIL STORES



CAD DESIGN REVIEW

Specifications

Model		PN-H701
Installation		Landscape / Portrait
LCD Panel		70-inch-class (69 1/2-inch [176.6 cm] diagonal) TFT LCD
	Max. Resolution	3,840 x 2,160 pixels
	Max. Display Colours (approx.)	16.77 million colours
	Pixel Pitch (H x V)	0.401 x 0.401 mm
	Max. Brightness (average)*1*2	440 cd/m²
	Contrast Ratio*2	3000 : 1
	Viewing Angle (H/V)	176°/176° (CR 10)
	Active Screen Area (W x H)	1,538.9 x 865.6 mm (60 9/16" x 34 1/16")
	Response Time	6 ms (grey to grey, avg.)
	Backlight	LED, edge lit
Computer Input	**Video**	HDMI , Analogue RGB
	Synchronisation**	Horizontal/vertical separate (TTL: positive/negative)
	Plug & Play	VESA DDC2B
Input Terminals*3		HDMI x 4: (HDCP1.4 compatible: HDMI 1 – HDMI 3), (HDCP2.2 compatible: HDMI 4), (ARC compatible: HDMI 1), (MHL compatible: HDMI 4), Mini D-sub 15-pin x 1, RS-232C x 1*4*5, USB x 1 (photo, video, music)*6, 3.5 mm-diameter mini stereo jack x 1
Output Terminals*3		Digital audio output (optical) x 1, 3.5 mm-diameter mini stereo jack x 1
Input/Output Terminals*3		LAN: 10Base-T/100BASE-TX x 1
Built-in Speakers		10 W + 10 W
Mounting		VESA (4 points), 400 mm (15 3/4") pitch, M6 screw
Power Supply		100V–240V AC, 50/60 Hz
Power Consumption		270 W
Environmental Conditions	**Operating Temperature**	0°C to 40°C
	Operating Humidity	20% to 80% RH (no condensation)
Dimensions*7 **(W x D x H)** (approx.) (display only)		1,559 x 69 x 894 mm (61 3/8" x 2 11/16" x 35 3/16")
Weight (approx.) (display only)		37 kg
Main Accessories		Remote control unit x 1, cable clamps x 4, cable clamps (insertion type) x 2, power cord x 1, R-6 battery (AA size) x 2, CD-ROM x 1, setup manual x 1, power cord clamp x 1, power cord clamp screw x 1, USB flash drive cover x 1, USB flash drive cover screw x 1, horizontal sticker (logo) x 1, vertical sticker (operation panel) x 1, RS-232C conversion cable (3.5 mm-diameter mini stereo jack) x 1, USB extension cable x 1

Dimensions

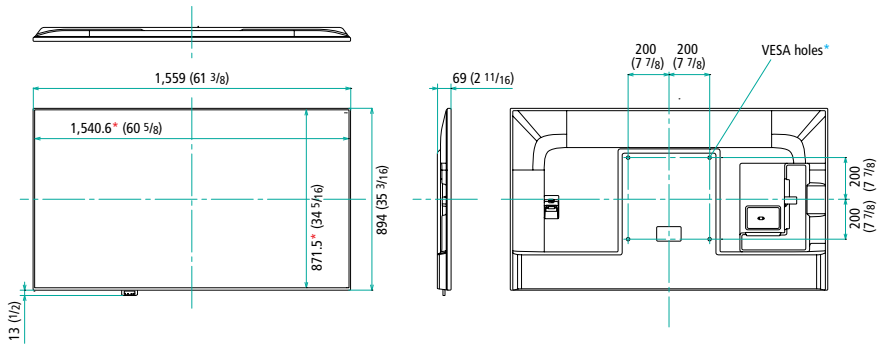

Units: mm (inch)
* Screen dimensions
* To use the VESA-standard mounting bracket, use M6 screws that are 8 to 10 mm plus the thickness of the bracket.

Input/Output Terminals

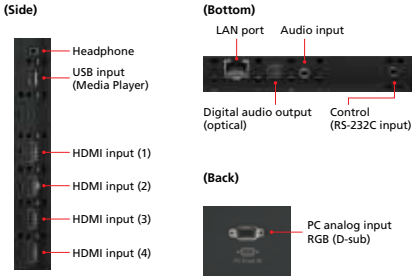

Options (Sharp Digital Signage Software)

- **PN-SS01** SHARP Digital Signage Software (Stand-Alone Version)
- **PN-SS02** SHARP Digital Signage Software (Network Version)
- **PN-SS05** SHARP Digital Signage Software (Pro Version)
- **PN-SW05** SHARP Digital Signage Software (Pro Web Server Version)
- **PN-SV01** SHARP Digital Signage Software (Viewer Version)

Notes

*1 Brightness depends on input mode and other picture settings. Brightness level will decrease slightly over the lifetime of the product. Due to the physical limitations of the equipment, it is not possible to maintain a precisely constant level of brightness. *2 When installing the monitor in the portrait orientation, and the internal temperature of the monitor rises excessively, the brightness of the backlight automatically decreases in order to prevent a further temperature rise. *3 Use a commercially available connection cable for PC and other video connections. *4 Requires the bundled RS-232C conversion cable. *5 Only for command control. *6 Supported media formats: JPEG for photos; MP4, M2TS, 3GP, and MOV for videos; and WAV, WMA, M4A, and MP3 for music. Note: USB storage device sold separately. ** Sync-on green and composite sync are not supported.

HDMI, the HDMI logo, and High-Definition Multimedia Interface are trademarks or registered trademarks of HDMI Licensing, LLC in the United States and other countries. MHL, the MHL logo, and Mobile High-Definition Link are trademarks or registered trademarks of MHL, LLC in the United States and other countries. All other brand names and product names may be trademarks or registered trademarks of their respective owners. All trademarks acknowledged.
E&OE. Sharp Corporation March 2015. Ref: 15943 PN-H701.

This is Why

www.sharp.eu

SHARP

SHARP ELECTRONICS (EUROPE) GMBH
VISUAL SOLUTIONS DIVISION
FREISINGER STR. 9
85716 UNTERSCHLEISSHEIM
GERMANY

EMAIL: Europe-visualsolutions@sharp.eu

MHL Mobile High-Definition Link
HDMI HIGH-DEFINITION MULTIMEDIA INTERFACE