PHILIPS

Wall light

myGarden

Cottage

black

LED

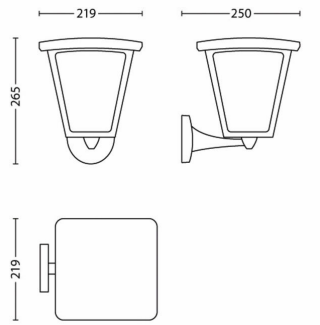

15480/30/16



Enjoy a beautiful garden with light

The updated gas lamp design of this Philips myGarden Cottage LED wall light in black will give your outdoor space classic style with a contemporary touch. High-quality Philips LEDs ensure plenty of warm white light all night long.

Sustainable light solutions

- Energy saving
- High quality LED light
- Long operating life of up to 15 years
- Warm white light
- Philips offers a 5-year warranty on the LED module and driver

Designed for your garden

- IP44 - weatherproof

Highlights

Energy saving



This Philips energy-saving lamp conserves energy compared with traditional light sources, helping you to save money on your electricity bills and do your bit for the environment.

High quality LED light



The LED technology integrated into this Philips lamp is a unique solution developed by Philips. It turns on instantly, enables an optimal light output and brings out vivid colours in your home.

Long operating life



A light source you can trust. The integrated LEDs used in this Philips LED lamp will last up to 15,000 hours (which equals 15 years on the basis of an average use of 3 hours/day with at least 13,000 on/off switching cycles). It feels so good to think that you won't have to worry about maintenance or light bulb replacement while having the perfect light ambience in your home.

Warm white light

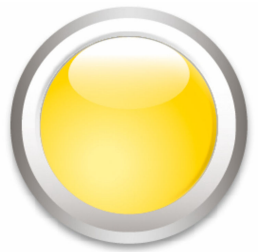

Light can have different colour temperatures, indicated in units called Kelvin (K). Lamps with a low Kelvin value produce a warm, more cosy light, while those with a higher Kelvin value produce a cool, more energising light. This Philips lamp offers warm white light for a cosy atmosphere.

5-year warranty on LED system



On top of the standard 2-year warranty for this lamp, Philips offers a 5-year warranty on the LED system, meaning the LED module and the driver in this lamp.

IP44 - weatherproof



This Philips outdoor light is especially designed for humid outdoor environments. It was tested rigorously to ensure its water resistance. The IP level is described by two figures: the first one refers to the protection level against dust, the second against water. This outdoor light is designed with IP44: it is protected against splashing water. This product is most commonly used and ideal for general outdoor use.

Specifications

Design and finishing

- Colour: black
- Material: aluminium

Extra feature/accessory incl.

- 5 year warranty on the LED module: Yes
- LED integrated: Yes

Miscellaneous
- Especially designed for: Garden and Patio
- Style: Heritage
- Type: Wall light
- EyeComfort: No

Power consumption
- Energy Efficiency Label: Built in LED

Product dimensions and weight
- Height: 26.5 cm
- Length: 21.9 cm
- Net weight: 1.200 kg
- Width: 25 cm

Service
- Warranty: 2 year(s)

Technical specifications
- Lifetime up to: 25,000 h
- Light source equivalent to traditional bulb of: 42 W
- Total lumen output fixture: 430 lm
- Bulb technology: 230 V
- Light colour: warm white
- Mains power: 50-60 Hz
- Fixture dimmable: No
- LED: Yes
- Built-in LED: Yes
- Energy class included light source: Built-in LED
- Number of bulbs: 1
- Wattage bulb included: 4.5 W
- IP code: IP44
- Class of protection: I - earthed
- Light source replaceable: No

Packaging dimensions and weight
- EAN/UPC - product: 8718696122501
- Net weight: 1.200 kg
- Gross weight: 1.557 kg
- Height: 283.000 mm
- Length: 228.000 mm
- Width: 253.000 mm
- Material number (12NC): 915004566401

Issue date: 2020-12-11
Version: 0.514

© 2020 Signify Holding. All rights reserved. Signify does not give any representation or warranty as to the accuracy or completeness of the information included herein and shall not be liable for any action in reliance thereon. The information presented in this document is not intended as any commercial offer and does not form part of any quotation or contract, unless otherwise agreed by Signify. Philips and the Philips Shield Emblem are registered trademarks of Koninklijke Philips N.V.

www.lighting.philips.com