BUFFALO™

35020641-01

# BS-GU2005

## Hardware Manual

## Package Contents

The package contains the items shown below. If any items are missing, please contact the dealer where you purchased this product.
The appearance of this product may vary from the illustration.

• Switch (main unit)..... 1

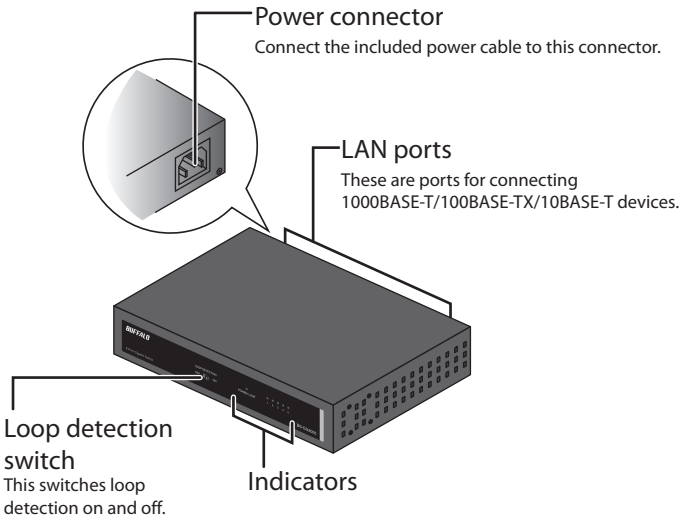


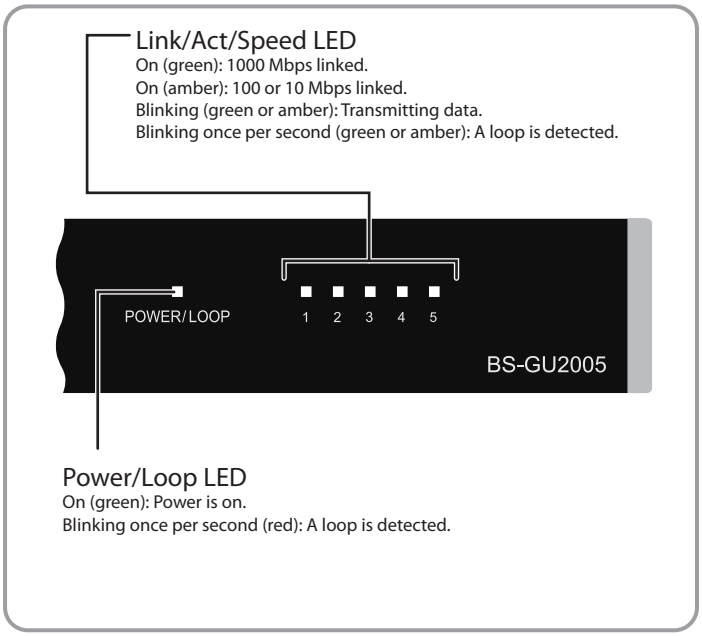


• Power cable..... 1
• Rubber feet..... 4
• Serial number stickers..... 2
• Hardware manual (this document)..... 1
• Warranty..... 1

Only use the cables and accessories that are included in the package. Don't use other accessories or cables unless specifically instructed to in the documentation.

## Installation

### Precautions for Installation

- Do not install the device in an unstable location such as on an unsteady table or an inclined surface.
- Do not place another hub or object that generates heat on this unit.
- Please route all cables properly to prevent people from tripping over them.
- Ensure the air vents on the product are not blocked by other equipment or walls.
- Only use the power cable included with the product. Using other power cables may result in damage or fire.

### Floor or Shelf Mounting

Attach the supplied rubber feet to the bottom corners of the unit before use.

### Mounting to a Metal Surface

To mount to a metal surface, such as the side of a steel desk, use the "BS-MGK-A Magnet Kit" (sold separately). Attach the supplied rubber feet to the bottom corners of the unit before using the magnet kit.

Caution: Do not put floppy discs, magnetic cards, or other magnetic storage media near magnets. Doing so may delete or corrupt data.
Note: If the switch is secured by the magnet kit alone, it should be no more than 75 cm (29.5 in) from the floor.

### Mounting to a Wall

To mount the unit directly to the wall, use 2 screws (not included) with the dimensions shown below. Install the screws 78 mm (3.07 in) apart and slide the mounting holes on the base of the switch over them.

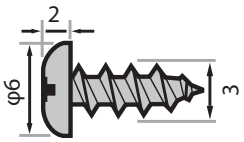


## Loop Detection

This unit can detect network loops that can cause interference in the network.

### What Is a Loop?

If both ends of an Ethernet cable are connected to the same hub, or when multiple connections exist between two hubs, data may be sent in a loop around the network, wasting network capacity and never getting to its destination. This continuously circulating data may interfere with other network communication.

### Loop Detection

Off: Loops are not detected.
On: If a network loop is detected, the power/loop, and link/act/speed LEDs for the detected port blink once per second.

Notes:
- While loop detection is enabled, this switch will send a loop detection packet through the network every two seconds. If these packets disrupt your network in any way, disable loop detection.
- Loop detection cannot detect all types of loops.

### Turning Loop Detection On and Off

1. Use the switch on the front of the switch to turn loop detection on or off.
2. Disconnect power cable and reconnect it.

### When a Loop Is Detected

Reconnect your Ethernet cabling, making sure that there are no redundant connections.

# Specifications

Check Buffalo's website or the product catalog for information about the latest products or compatible models.

| | |
|---|---|
| Standards | IEEE802.3ab (1000BASE-T)<br>IEEE802.3u (100BASE-TX)<br>IEEE802.3 (10BASE-T) |
| Flow Control | IEEE802.3x (when operating at full duplex)<br>Back pressure (when operating at half duplex) |
| Ports | 5 ports (all ports support auto MDI-X) |
| Compatible Cables (*) (**) | 1000BASE-T: Enhanced category 5 or higher UTP/STP cables<br>100BASE-TX: Category 5 or higher UTP/STP cables<br>10BASE-T: Category 3 or higher UTP/STP cables |
| Connector | RJ-45 8-pin connector (shielded) |
| Power | AC 100-240 V 50-60 Hz |
| Power Consumption | Max. 2.9 W |
| External Dimensions | 180 x 102 x 30 mm; 7.09" x 4.02" x 1.18" |
| Weight | 460 g (16.23 oz.) |
| Operating Environment | Operating temperature: 0–50 ℃ (32-122 °F)<br>Operating humidity: 10–85 % (no condensation) |
| Standards | VCCI Class A, FCC/Canada IC Class A, UL |
| Transmission Speeds | 1000 Mbps (1000BASE-T)<br>100 Mbps (100BASE-TX)<br>10 Mbps (10BASE-T) |
| Switching Method | Store and forward |
| Jumbo Frames | Up to 9,216 Bytes (including 14 bytes header + 4 bytes FCS) |
| Transfer Encryption Method | 8B1Q4/4D-PAM5 (1000BASE-T)<br>4B5B/MLT-3 (100BASE-TX)<br>Manchester encoding (10BASE-T) |
| Access Method | CSMA/CD |
| Data Transfer Speed (Throughput) | 1,488,095 packets/second (1000BASE-T)<br>148,810 packets/second (100BASE-TX)<br>14,881 packets/second (10BASE-T) |
| Switched Fabric | 10 Gbps |
| MAC Address Table | About 2,000 (self-learning) |
| Buffer Memory | 128 KBytes |
| Aging Time | Approx. 300 seconds |
| Transmission Distance | Max. 100 m |
| Other | Loop detection<br>Power saving (***) |

* This unit automatically detects and adjusts for straight or crossover Ethernet cables, so either type of cable may be used.

** Site-terminated Ethernet cables are not recommended. Always use preassembled cables.

*** This function automatically recognizes the port link status and the length of Ethernet cables, then adjusts the operating power accordingly. This also adjusts the power when the data is not transmitted (the device connected to this switch should be compatible with IEEE802.3az EEE).

# Troubleshooting

If you are unable to connect to a network, check the following.

- Is the power cable connected correctly? Also, is the power cable plugged into an outlet or surge protector?
- Is the Ethernet cable connected correctly? Are any cables disconnected or broken?
- Is the link/act/speed LED on? If not, manually set the communication mode of the connected device to 100 Mbps half duplex or 10 Mbps half duplex.

This device complies with Part 15 of the FCC Rules. Operation is subject to the following two conditions: (1) this device may not cause harmful interference, and (2) this device must accept any interference received, including interference that may cause undesired operation.

This equipment has been tested and found to comply with the limits for a Class A digital device, pursuant to part 15 of the FCC Rules. These limits are designed to provide reasonable protection against harmful interference when the equipment is operated in a commercial environment. This equipment generates, uses, and can radiate radio frequency energy and, if not installed and used in accordance with the instruction manual, may cause harmful interference to radio communications. Operation of this equipment in a residential area is likely to cause harmful interference in which case the user will be required to correct the interference at his own expense.

2014.10