LANVIEW
PROFESSIONAL NETWORK SOLUTIONS

# 10.3Gb/s XFP Transceiver



# 10.3Gb/s XFP Transceiver

Small Form Factor 10Gb/s XFP transceivers are compatible with XFP MSA Specification .It is designed for use in 10G-Gigabit links up to 10km of G.652. Digital diagnostics functions are available via a 2-wire serial interface, as specified in the XFP MSA.

## Product Features

- ✓ Duplex LC connector
- ✓ Hot-pluggable XFP footprint
- ✓ 1310nm DFB laser
- ✓ RoHS compliant and Lead Free
- ✓ Up to 10km for single mode fiber
- ✓ Metal enclosure for lower EMI
- ✓ Built-in dual CDR
- ✓ +3.3V power supply and power dissipation <1.5W
- ✓ XFP MSA INF-8077I Compliant
- ✓ Compliant with IEEE 802.3ae

## Applications

- ✓ 10GBASE-LR/LW
- ✓ 10G Fibre Channel
  SONET OC-192 /SDH STM-64



## Regulatory Compliance

- ESD to the Electrical PINs: compatible with MIL-STD-883 Method 3015
- ESD to the Duplex LC Receptacle: compatible with EN 61000-4-2
- Immunity compatible with EN 61000-4-3
- EMI compatible with FCC Part 15 Class B
- Laser Eye Safety compatible with FDA 21CFR 1040.10 and 1040.11 IEC 60950, IEC 60825-1,2
- RoHS compliant with RoHS 2.0(2015/863/EU)-Amending

## Pin Descriptions

| Pin | Symbol | Name | Ref. |
|---|---|---|---|
| 1 | GND | Module Ground | |
| 2 | VEE5 | Optional-5.2 Power Supply-not required | |
| 3 | MOD_DESEL | Module De-select; When held low allows the module to respond to 2-wire serial interface. LVTTL-I | |
| 4 | /INTERRUPT | Interrupt; Indicates presence of an important condition which can be read via the 2-wire serial interface. LVTTL-O | 2 |
| 5 | TX_DIS | Transmitter Disable. Logic1 indicates laser output disabled, LVTTL-I | |
| 6 | VCC5 | +5V Power Supply | |
| 7 | GND | Module Ground | 1 |
| 8 | VCC3 | +3.3V Power Supply | |
| 9 | VCC3 | +3.3V Power Supply | |
| 10 | SCL | 2-Wire Serial Interface Clock. LVTTL-I | 2 |
| 11 | SDA | 2-Wire Serial Interface Data Line. LVTTL-I/O | 2 |
| 12 | MOD_ Abs | Indicates Module is not present. Grounded in the Module. LVTTL-O | 2 |
| 13 | MOD_NR | Module Not Ready; Indicating Module Operational Fault. Open-collector. LVTTL-O | 2 |
| 14 | RX_LOS | Loss of Signal indication. Logic 1 indicates loss of Signal. Open-collector. LVTTL-O | 2 |
| 15 | GND | Module Ground | 1 |
| 16 | GND | Module Ground | 1 |
| 17 | RD- | Receiver Inverted Data Output. CML-O | |
| 18 | RD+ | Receiver Non-Inverted Data Output. CML-O | |
| 19 | GND | Module Ground | 1 |
| 20 | VCC2 | +1.8V Power Supply (Not required). | 3 |
| 21 | P_DOWN/RST | Power down; When high, requires the module to limit power consumption to 1.5W or below. 2-Wire serial interface must be functional in the low power mode. LVTTL-I<br>Reset; The falling edge initiates a complete reset of the module including the 2-wire serial interface, equivalent to a power cycle. LVTTL-I | |

| | | | |
|---|---|---|---|
| 22 | VCC2 | +1.8V Power Supply (Not required) | 3 |
| 23 | GND | Module Ground | 1 |
| 24 | REFCLK+ | Reference Clock (Not required) | |
| 25 | REFCLK- | Reference Clock (Not required) | |
| 26 | GND | Module Ground | 1 |
| 27 | GND | Module Ground | 1 |
| 28 | TD- | Transmitter Inverted Data Input. CML-I | |
| 29 | TD+ | Transmitter Non-Inverted Data Input. CML-I | |
| 30 | GND | Module Ground | 1 |

Notes:

1.Module ground pins GND are isolated from the module case and chassis ground within the module.

2.Open collector, Should be pulled up with 4.7K-10Kohms to a voltage between 3.15V and 3.6V on the host board.

3.The pins are open within module.

## Pin-out Connector Block on Host Board

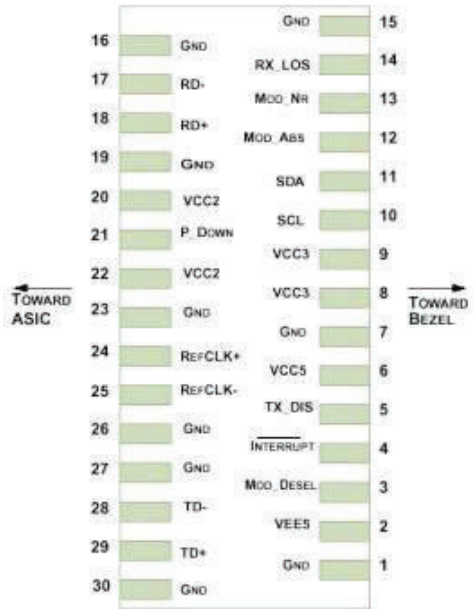


Pin-out of Connector Block on Host Board

## Recommend Circuit Schematic

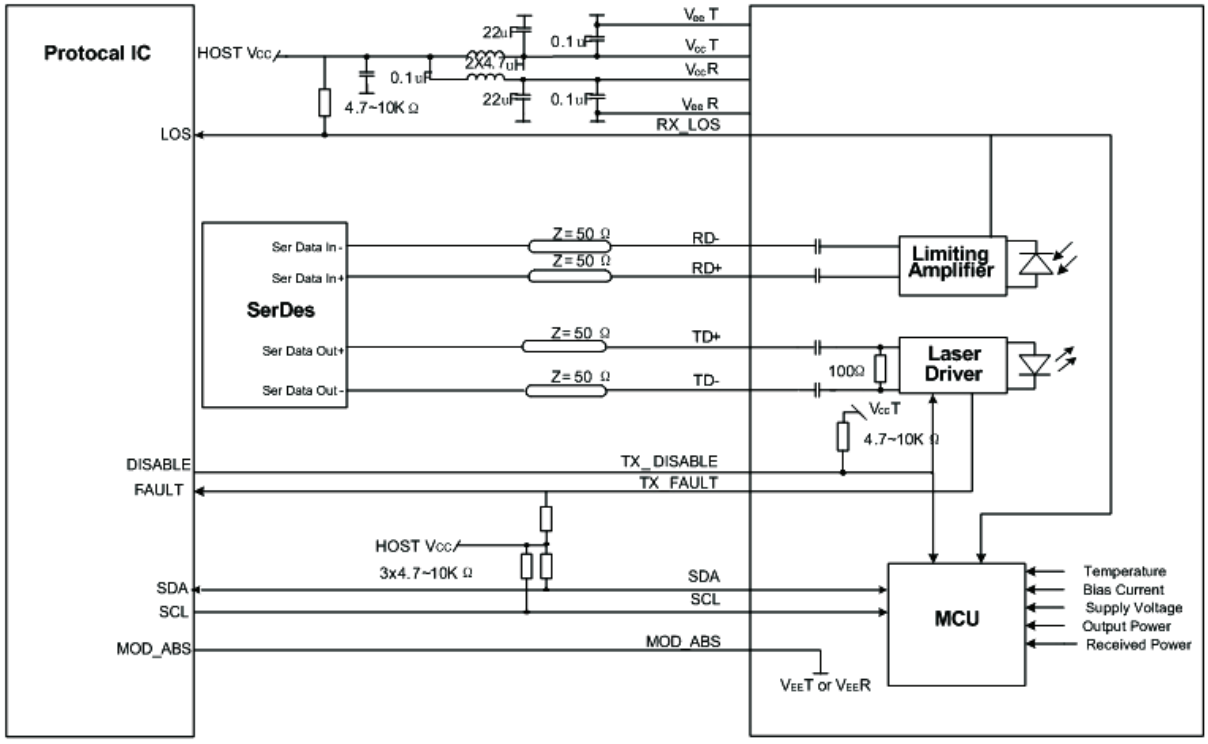


## Absolute Maximum Ratings

| Parameter | Symbol | Min | Typ | Max | Unit | Ref. |
|---|---|---|---|---|---|---|
| Maximum Supply Voltage | Vcc3 | -0.5 | | +4.0 | V | |
| Storage Temperature | TS | -40 | | +85 | ℃ | |
| Operating Humidity | RH | 0 | | 85 | % | |

## Recommended Operating Conditions

| Parameter | Symbol | Min | Typ | Max | Unit | Ref. |
|---|---|---|---|---|---|---|
| Power Supply Voltage | Vcc3 | 3.13 | 3.30 | 3.47 | V | |
| Power Supply Current | Icc3 | | | 450 | mA | |
| Case Operating Temperature | Tc | 0 | | +70 | °C | Commercial |
| | TI | -40 | | +85 | °C | Industrial |
| Bit Rate | BR | 9.95 | | 11.3 | Gbps | |
| 9/125um G.652 SMF | Lmax | | | 10 | km | |

## Electrical Characteristics

| Parameter | Symbol | Min | Typ | Max | Unit | Ref. |
|---|---|---|---|---|---|---|
| Transmitter | | | | | | |
| Input differential impedance | Rin | 80 | 100 | 120 | Ω | 1 |
| Differential data input swing | Vin, pp | 120 | | 850 | mV | |
| TX Disable-High | | Vcc – 0.8 | | Vcc | V | |
| TX Disable-Low | | Vee | | Vee+ 0.8 | V | |
| TX Fault-High | | Vcc-0.8 | | Vcc | V | |
| TX Fault-Low | | Vee | | Vee+0.8 | V | |
| Receiver | | | | | | |
| Differential data output swing | Vout, pp | 300 | | 850 | mV | 2 |
| Data output rise time | Tr | 30 | | | ps | 3 |
| Data output fall time | Tf | 30 | | | ps | 3 |
| LOS-High | | Vcc – 0.8 | | Vcc | V | |
| LOS-Low | | Vee | | Vee+0.8 | V | |

Notes:

1. AC coupled.
2. Into 100 ohm differential termination.
3. 20 – 80 %

## Optical Characteristics

| Parameter | Symbol | Min | Typ | Max | Unit | Ref. |
|---|---|---|---|---|---|---|
| Transmitter | | | | | | |
| Output Opt. Power | PO | -6 | | -1 | dBm | |
| Optical Wavelength | λ | 1260 | | 1355 | nm | |
| Side Mode Suppression Ratio | SMSR | 30 | | | dB | |
| Spectral Width (-20dB) | Δλ | | | 1 | nm | |
| Optical Extinction Ratio | ER | 6 | | | dB | |
| Average Launch power of OFF TX | Poff | | | -40 | dBm | |
| Receiver | | | | | | |
| RX Sensitivity @10.3Gb/s | SENS | | | -14.4 | dBm | 1,2 |
| Receiver Overload | | 0.5 | | | dBm | |
| Optical Center Wavelength | λC | 1260 | | 1610 | nm | |
| LOS De-Assert | LOSD | | | -15 | dBm | |
| LOS Assert | LOSA | -30 | | | dBm | |
| LOS Hysteresis | | 0.5 | | | dB | |

Notes:
1.Measured with conformance signals defined in FC-PI-2 Rev. 10.0 specifications.
2.Measured with PRBS $2^{31}$-1 at $10^{-12}$ BER.

## Mechanical Specifications

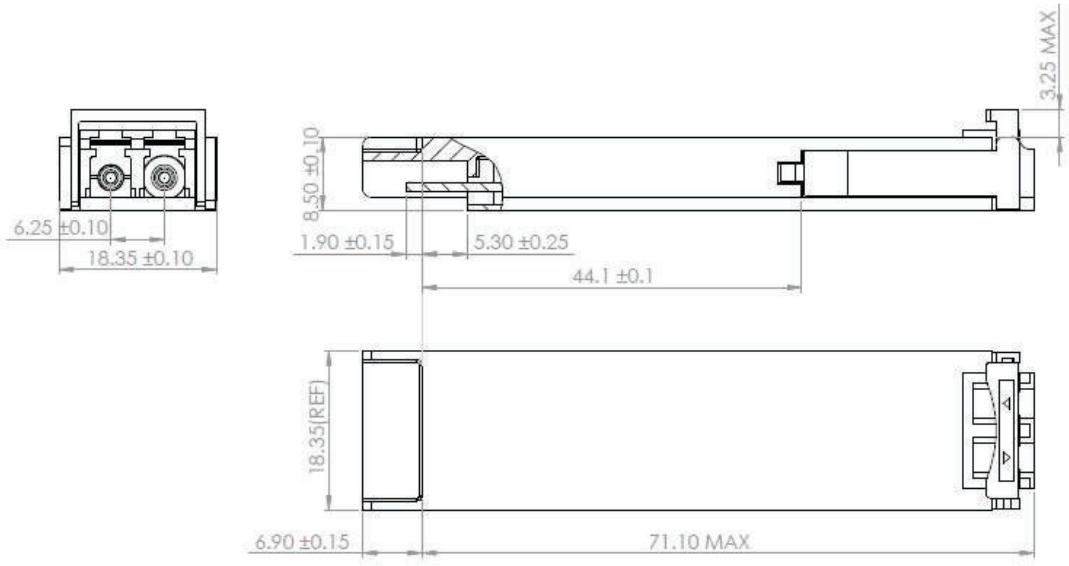

## EEPROM Information

• EEPROM memory map specific data field description is as below:

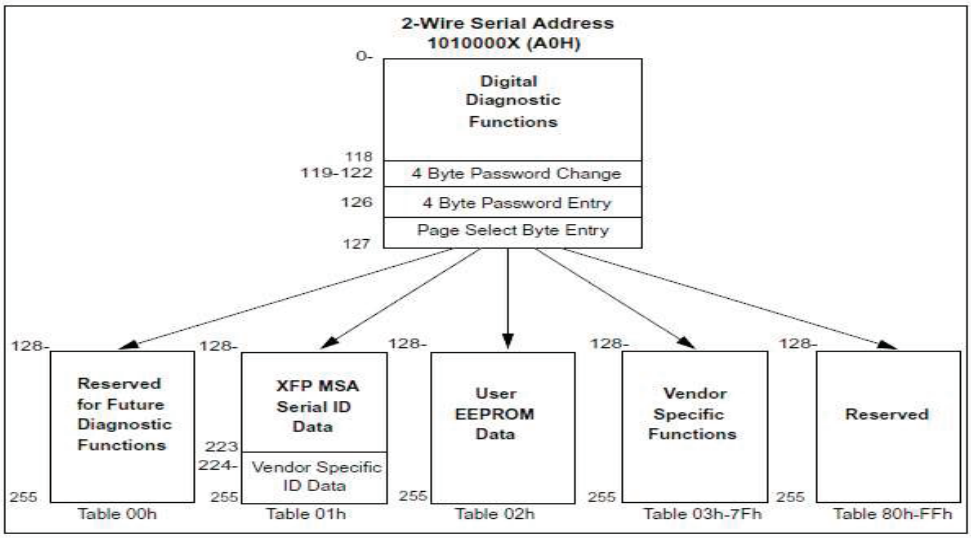


## Digital Diagnostic Monitoring Interface

Five transceiver parameter values are monitored. The following table defines the monitored parameter's accuracy.

| Parameter | Range | Accuracy | Calibration |
|---|---|---|---|
| Temperature | 0 to +70°C (C)<br>-40 to +85°C (I) | ±3°C | Internal |
| Voltage | 2.97 to 3.63V | ±3% | Internal |
| Bias Current | 0 to 100mA | ±10% | Internal |
| TX Power | -6 to -1dBm | ±3dB | Internal |
| RX Power | -14.4 to 0.5dBm | ±3dB | Internal |