LANVIEW
PROFESSIONAL NETWORK SOLUTIONS

10.3Gb/s XFP Transceiver



10.3Gb/s XFP Transceiver

Small Form Factor 10Gb/s XFP transceivers are compatible with XFP MSA Specification. They comply with SONET OC-192 IR-2,OC-192 IR-3,SDH STM S-64.2b, STM S-64.3b as well as with 10G Ethernet 10G BASE-ER/EW per IEEE802.3ae and 40km 10G Fibre Channel applications.

Product Features

- ✓ Supports 9.95 to 11.3Gb/s
- ✓ Duplex LC connector
- ✓ Hot-pluggable XFP footprint
- ✓ Cooled 1550nm EML laser
- ✓ RoHS compliant and Lead Free
- ✓ 40Km link length
- ✓ Metal enclosure for lower EMI
- ✓ Built-in dual CDR
- ✓ +5.0V and +3.3V power supply and power dissipation <2.5W
- ✓ XFP MSA INF-8077I Compliant

Applications

- ✓ SONET OC-192 IR-2/IR-3
  SDH STM S-64.2b/S-64.3b
  ITU-T G.709
- ✓ 10GBASE-ER/EW
  10GBASE-ER/EW + FEC
- ✓ 10G Fibre Channel
  10G Fibre Channel + FEC



Regulatory Compliance

- ESD to the Electrical PINs: compatible with MIL-STD-883 Method 3015
- ESD to the Duplex LC Receptacle: compatible with IEC 61000-4-2
- Immunity compatible with IEC 61000-4-3
- EMI compatible with FCC Part 15 Class B EN55022 Class B (CISPR 22B) VCCI Class B
- Laser Eye Safety compatible with FDA 21CFR 1040.10 and 1040.11 EN60950, EN (IEC) 60825-1,2
- RoHS compliant with RoHS 2 (2011/65/EU)

Pin Descriptions

Pin	Symbol	Name	Ref.
1	GND	Module Ground	
2	VEE5	Optional-5.2 Power Supply-not required	
3	MOD_DESEL	Module De-select; When held low allows the module to respond to 2-wire serial interface. LVTTL-I	
4	/INTERRUPT	Interrupt; Indicates presence of an important condition which can be read via the 2-wire serial interface. LVTTL-O	2
5	TX_DIS	Transmitter Disable. Logic1 indicates laser output disabled, LVTTL-I	
6	VCC5	+5V Power Supply	
7	GND	Module Ground	1
8	VCC3	+3.3V Power Supply	
9	VCC3	+3.3V Power Supply	
10	SCL	2-Wire Serial Interface Clock. LVTTL-I	2
11	SDA	2-Wire Serial Interface Data Line. LVTTL-I/O	2
12	MOD_ Abs	Indicates Module is not present. Grounded in the Module. LVTTL-O	2
13	MOD_NR	Module Not Ready; Indicating Module Operational Fault. Open-collector. LVTTL-O	2
14	RX_LOS	Loss of Signal indication. Logic 1 indicates loss of Signal. Open-collector. LVTTL-O	2
15	GND	Module Ground	1
16	GND	Module Ground	1
17	RD-	Receiver Inverted Data Output. CML-O	
18	RD+	Receiver Non-Inverted Data Output. CML-O	
19	GND	Module Ground	1
20	VCC2	+1.8V Power Supply (Not required).	3
21	P_DOWN/RST	Power down; When high, requires the module to limit power consumption to 1.5W or below. 2-Wire serial interface must be functional in the low power mode. LVTTL-I Reset; The falling edge initiates a complete reset of the module including the 2-wire serial interface, equivalent to a power cycle. LVTTL-I	

22	VCC2	+1.8V Power Supply (Not required)	3
23	GND	Module Ground	1
24	REFCLK+	Reference Clock (Not required)	
25	REFCLK-	Reference Clock (Not required)	
26	GND	Module Ground	1
27	GND	Module Ground	1
28	TD-	Transmitter Inverted Data Input. CML-I	
29	TD+	Transmitter Non-Inverted Data Input. CML-I	
30	GND	Module Ground	1

Notes:

1.Module ground pins GND are isolated from the module case and chassis ground within the module.

2.Open collector, Should be pulled up with 4.7K-10Kohms to a voltage between 3.15V and 3.6V on the host board.

3.The pins are open within module.

Pin-out Connector Block on Host Board

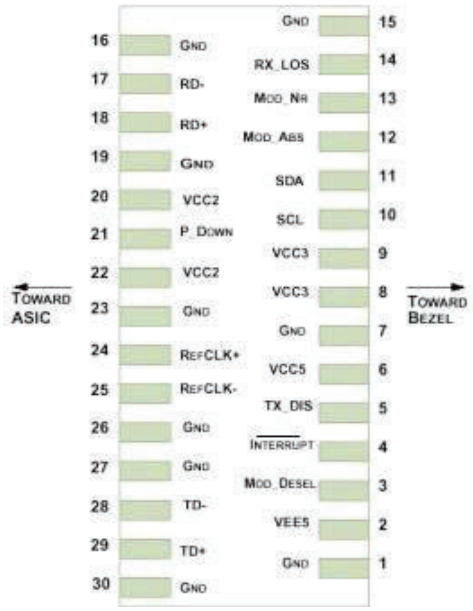

Pin-out of Connector Block on Host Board

Recommend Circuit Schematic

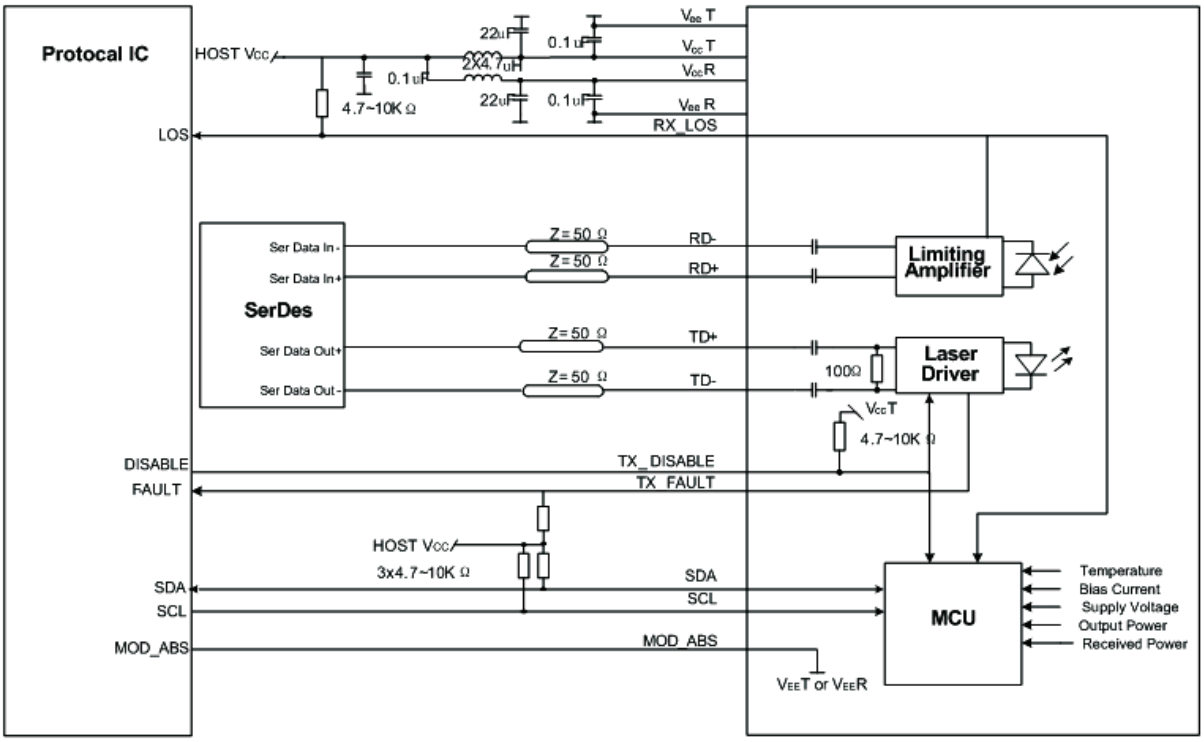

Absolute Maximum Ratings

Parameter	Symbol	Min	Typ	Max	Unit	Ref.
Maximum Supply Voltage	Vcc3	-0.5		+4.0	V	
	Vcc5	-0.5		+6.0	V	
Storage Temperature	TS	-40		+85	°C	
Operating Humidity	RH	0		85	%	

Recommended Operating Conditions

Parameter	Symbol	Min	Typ	Max	Unit	Ref.
Power Supply Voltage	Vcc3	3.13	3.30	3.47	V	
	Vcc5	4.75	5.0	5.25	V	
Power Supply Current	Icc3			600	mA	
	Icc5			100	mA	
Case Operating Temperature	Tc	0		+70	°C	Commercial
	Te	0		+85		Extend
	TI	-40		+85		Industrial
Bit Rate	Br	9.95		11.3	Gbps	
9/125um G.652 SMF	Lmax			40	km	

Electrical Characteristics (TOP=25°C, Vcc=3.3Volts)

Parameter	Symbol	Min	Typ	Max	Unit	Ref.
Transmitter						
Input differential impedance	Rin	80	100	120	Ω	1
Differential data input swing	Vin, pp	120		850	mV	
TX Disable-High		Vcc – 0.8		Vcc	V	
TX Disable-Low		Vee		Vee+ 0.8	V	
TX Fault-High		Vcc-0.8		Vcc	V	
TX Fault-Low		Vee		Vee+0.8	V	
Receiver						
Differential data output swing	Vout, pp	300		850	mV	2
Data output rise time	Tr	30			ps	3
Data output fall time	Tf	30			ps	3
LOS-High		Vcc – 0.8		Vcc	V	
LOS-Low		Vee		Vee+0.8	V	

Notes:
1. AC coupled.
2. Into 100 ohm differential termination.
3. 20 – 80 %

Optical Characteristics (TOP=25°C, Vcc=3.3 Volts)

Parameter	Symbol	Min	Typ	Max	Unit	Ref.
Transmitter						
Output Opt. Power	PO	-1		4	dBm	
Optical Wavelength	λ	1530		1565	nm	
Side-Mode Suppression Ratio	SMSR	30			dB	
RMS Spectral Width(-20dB)	σ			1	nm	
Optical Extinction Ratio	ER	8.2		-	dB	
SONET Tx Jitter Generation(peak-to-peak)	Txj			0.1	UI	3
Tx jitter Generation(RMS)	Txjrms			0.01	UI	4
Path penalty at 800ps/nm@9.95Gb/s				2	dB	
Relative Intensity Noise	RIN			-128	dB/Hz	
Receiver						
RX Sensitivity @10.3Gb/s	SENS			-16	dBm	1,2
Receiver Overload		-1			dBm	
Optical Center Wavelength	λC	1260		1600	nm	
LOS De-Assert	LOSD			-20	dBm	
LOS Assert	LOSA	-34			dBm	
LOS Hysteresis		0.5			dB	

Notes:
1.Measured with conformance signals defined in FC-PI-2 Rev. 10.0 specifications.
2.Measured with PRBS 2^{31}-1 at 10^{-12} BER.
3.Measured with a host jitter of 50 mUI peak-to-peak per Telcordia GR-253
4.Measured with a host jitter of 7 mUI RMS.

Mechanical Specifications

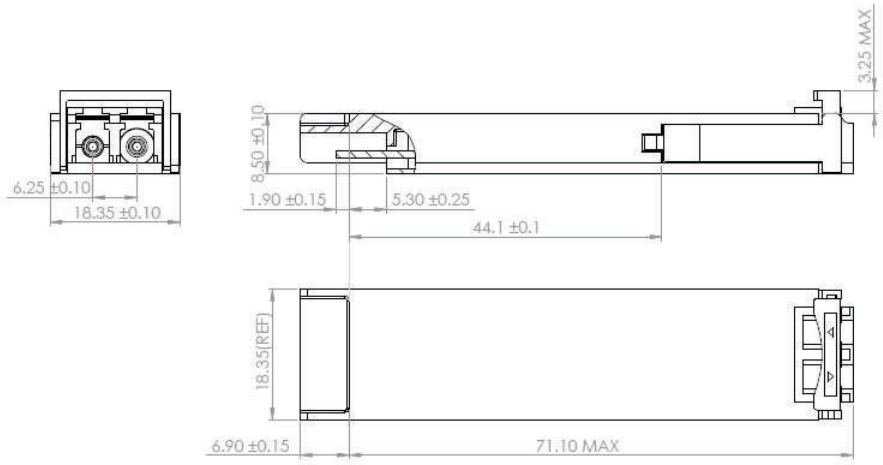

EEPROM Information

• EEPROM memory map specific data field description is as below:

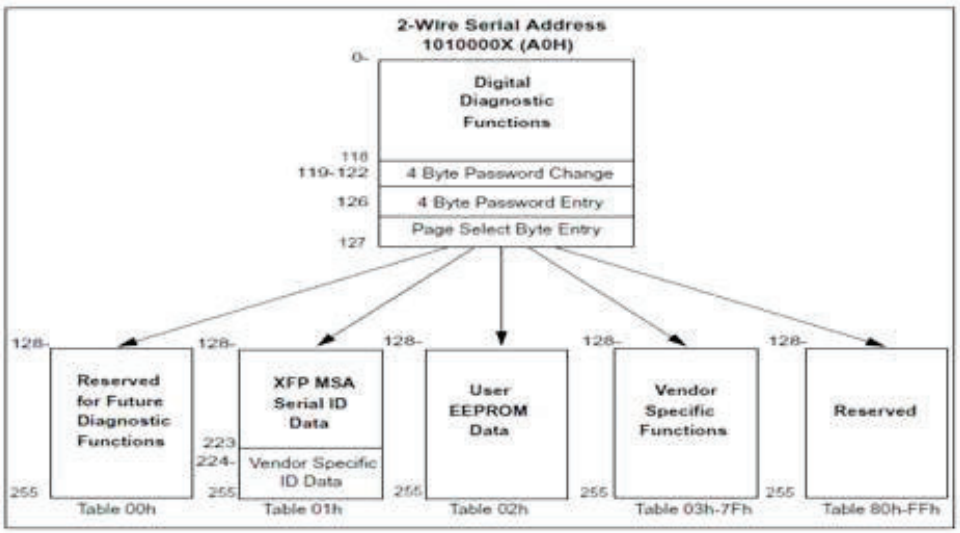

Digital Diagnostic Monitoring Interface

Parameter	Range	Accuracy	Calibration
Temperature	0 to +70°C (C) 0 to +85°C (E) -40 to +85°C (I)	±3°C	Internal
Voltage	2.97 to 3.63V	±3%	Internal
Bias Current	0 to 100mA	±10%	Internal
TX Power	-1 to 4dBm	±3dB	Internal
RX Power	-16 to -1dBm	±3dB	Internal

Five transceiver parameter values are monitored. The following table defines the monitored parameter's accuracy.