ACM 928/BA

12NC: 859991007510

GTIN (EAN) code: 8003437830976

SENSING THE DIFFERENCE

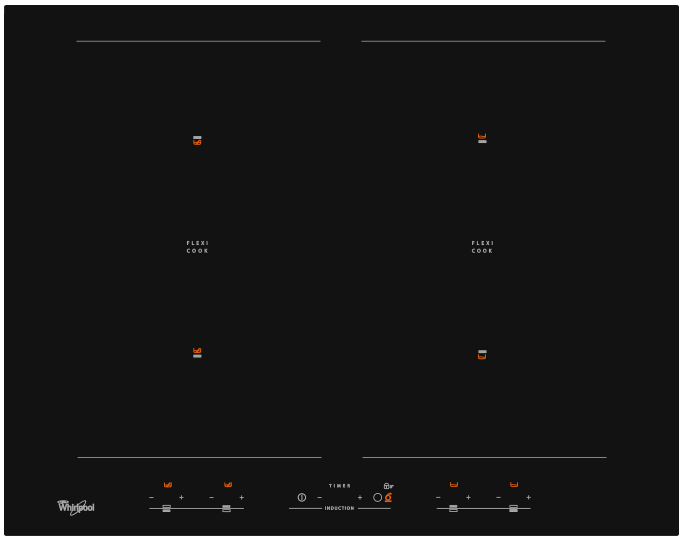

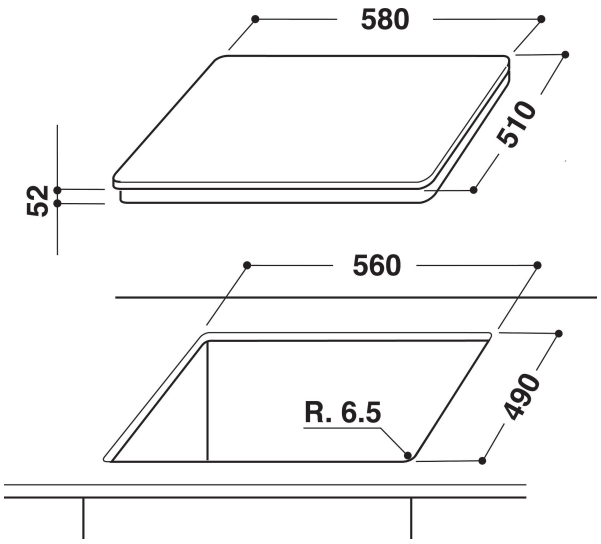

- 6TH Sense Technology
- 4 induction cooking zones
- Double flexi zone
- Residual heat indicator
- Child lock
- On/Off Switch
- Simmering function
- Melting function
- 60 cm hob
- Timer
- Touch control for each cooking zone (Ulysse)
- Black Glass Hob
- 4 Boosters
- 4 Plate on Indicator
- Total power declared: 7.2 kW
- Power on indicator
- Supply cord included

Whirlpool induction glass-ceramic hob - ACM 928/BA

4 induction rings. flexiCook zone technology, allowing you to combine multiple burners into a single cooking zone, for larger pots and pans. 6th SENSE technology, that allows you to automatically set the optimum temperature and power for simmering, melting or boiling, at the touch of a button. This Whirlpool induction glass-ceramic Hob features: An elegant technology, that heats the pan, not the hob, reducing energy dispersion and providing perfect cooking results. Electric power supply.

Power management
Outstanding energy efficiency. With the Power Management function, you set the hob's power level, to avoid the risk of overloading the power supply in your home.

Booster
Enjoy super fast boiling times with the Booster cooking zone.

Direct Access
Intuitive design. The Direct Access front controls provide stunning, intuitive control over all of your hob's functions.

6TH SENSE
Enjoy ideal cooking results. 6TH SENSE automatically sets the ideal temperature and power for simmering, melting, or boiling, at the touch of a button.

Flexible Cooking
Automatic power settings. Select the cooking function on your touch display and your hob will automatically adjust the power level accordingly.

Melting
Perfect low-heat cooking. The Melting function allows you to cook at very low temperatures, providing you with the ideal solution for melting chocolate, butter or for cooking light, delicate sauces.

FlexiCook
Flexibility and performance. FlexiCook provides flexible cooking space for pots and pans of any size.

Induction technology
Faster, energy-efficient cooking. Induction technology heats the pan, not the hob, reducing energy dispersion by 10%, and providing perfect cooking results.

Simmering
Superb simmering. The Simmering function allows you to obtain the perfect results for your slow-cooking recipes, and prevents your food from toughening.

ACM 928/BA

12NC: 859991007510

GTIN (EAN) code: 8003437830976

Whirlpool
SENSING THE DIFFERENCE

MAIN FEATURES

Product group	Hob
Construction type	Built-in
Type of control	Electronic
Type of control settings	-
Number of gas burners	0
Number of electric cooking zones	4
Number of electric plates	0
Number of radiant plates	0
Number of halogen plates	0
Number of induction plates	4
Number of electric warming zones	0
Location of control panel	Front
Basic surface material	Glass
Main colour of product	Black
Electrical connection rating (W)	7200
Gas connection rating (W)	0
Current (A)	31,3
Voltage (V)	230
Frequency (Hz)	50/60
Length of Electrical Supply Cord (cm)	120
Plug type	No
Gas connection	N/A
Width of the product	580
Height of the product	56
Depth of the product	510
Minimum niche height	30
Minimum niche width	560
Niche depth	490
Net weight (kg)	10.5
Automatic programmes	No

TECHNICAL FEATURES

Power on indicator	Yes
Number of indicators	4
Type of regulation	Stepless energy regulated
Type of lid	Without
Residual heat indicator	Separate
Main on/off switch	Yes
Safety device	-
Timer	Yes

PERFORMANCES

Energy input	Electric