BUFFALO™

35020554-01

BS-GU2016

User Manual

Package Contents

The package contains the items shown below. If any items are missing, please contact the dealer where you purchased the BS-GU2016.

The appearance of the BS-GU2016 may vary from the illustration.

- Switch (main unit) 1
- Power cable (AC 100-240 V) 1
- Power cable retainer band 1
- Rubber feet 4
- Mounting brackets 2
- Screws for mounting brackets 8
- Serial number stickers 2
- User manual (this document) 1
- Warranty 1

Layout

Loop prevention switch

This switches loop prevention on and off.

Power connector

Connect the included power cable to this connector.

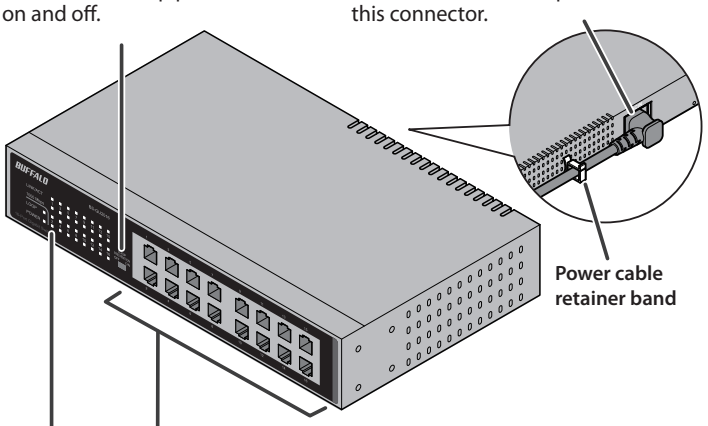

LAN ports

These are ports for connecting 1000BASE-T/100BASE-TX/10BASE-T devices.

Indicators

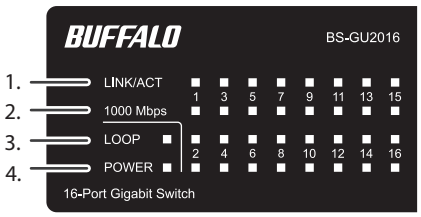

1. Link/Act (Green)
   - On: Link established
   - Blinking: Data transfer
     If a loop is blocked, the LED for the blocked port blinks once per second.
   - Off: Link not established
2. 1000 Mbps (Green)
   - On: 1000 Mbps link
   - Blinking: If a loop is blocked, the LED for the blocked port blinks once per second.
   - Off: 100 Mbps or 10 Mbps link, no link
3. Loop (Red)
   - Blinking: Loop blocked (blinks once per second)
   - Off: Normal
4. Power (Green)
   - On: Power on
   - Off: Power off

Installation

Precautions for Installation

- Do not install the device in an unstable location such as on an unsteady table or an inclined surface.
- Do not place another hub or object that generates heat on this unit.
- Please route all cables properly to prevent people from tripping over them.
- Ensure the air vents on the product are not blocked by other equipment or walls.
- Only use the power cable included with the product. Using other power cables may result in damage or fire.

Floor or Shelf Mounting

Attach the supplied rubber feet to the bottom corners of the unit before use.

Mounting to a Metal Surface

To mount to a metal surface, such as the side of a steel desk, use the "BS-MGK-A Magnet Kit" (sold separately). Attach the supplied rubber feet to the bottom corners of the unit before using the magnet kit.

Caution: Do not put floppy discs, magnetic cards, or other magnetic storage media near magnets. Doing so may delete or corrupt data.

Note: If the switch is secured by the magnet alone, it should be no more than 75 cm (29.5 in) from the floor.

Mounting to a Wall

The BS-GU2016 can be mounted to a wall using the supplied mounting brackets or the mounting holes on the bottom.

To mount the unit with the mounting brackets, install as shown in the figure below.

To mount the unit directly to the wall, use 2 screws (not included) with the dimensions shown below. Install the screws 85 mm (3.3 in) apart and slide the mounting holes on the base of the BS-GU2016 over them.

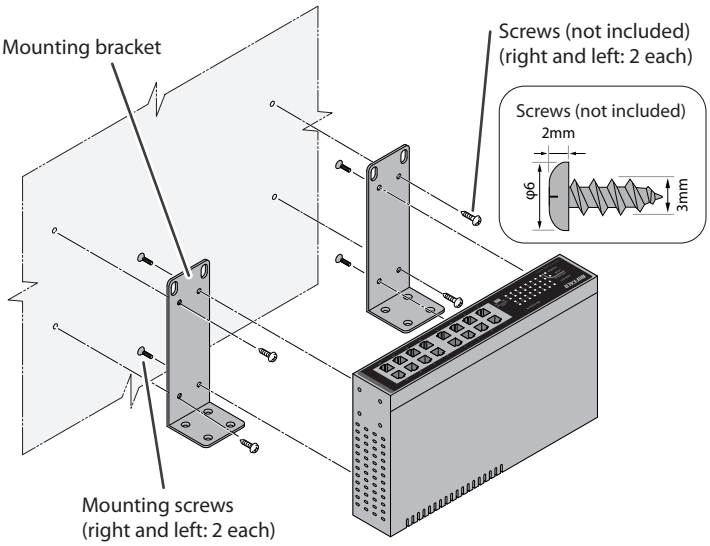

Installing on 19-inch Rack

Install as shown in the figure below by using the supplied mounting brackets.

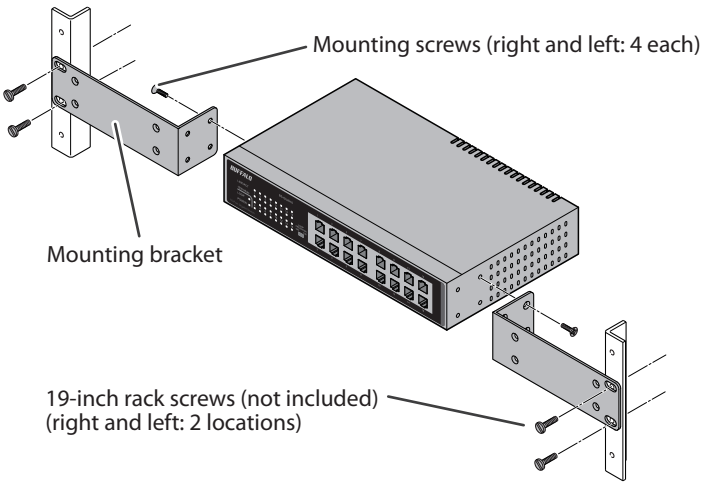

Loop Prevention

This unit can detect and prevent network loops that can cause interference in the network.

What Is a Loop?

If both ends of an Ethernet cable are connected to the same hub, or when multiple connections exist between two hubs, data may be sent in a loop around the network, wasting network capacity and never getting to its destination. This continuously circulating data may interfere with other network communication.

Loop Prevention

- Off: Loops are not blocked.
- On: If a network loop is detected, the port is blocked until the loop is fixed. Also, the loop, link/act, and 1000 Mbps LEDs for the blocked port blink once per second.

Notes:

- While loop prevention is enabled, the BS-GU2016 will send a loop detection packet through the network every two seconds. If these packets disrupt your network in any way, disable loop prevention.
- Loop prevention cannot detect or block all types of loops.

Turning Loop Prevention On and Off

Use the switch on the front of the BS-GU2016 to turn loop prevention on or off.

When a Loop Is Detected

Reconnect your Ethernet cabling, making sure that there are no redundant connections.

Troubleshooting

If you are unable to connect to a network, check the following.

- Is the power cable connected correctly? Also, is the power cable plugged into an outlet or surge protector?
- Is the Ethernet cable connected correctly? Are any cables disconnected or broken?
- Is the link/act LED on? If not, manually set the communication mode of the connected device to 100 Mbps half duplex or 10 Mbps half duplex.

Specifications

Check Buffalo's website (www.buffalotech.com) or the product catalog for information about the latest products or compatible models.

Standards	IEEE 802.3ab (1000BASE-T) IEEE 802.3u (100BASE-TX) IEEE 802.3 (10BASE-T)
Flow Control	IEEE802.3x (when operating at full duplex) Back pressure (when operating at half duplex)
Ports	16 (all ports support Auto MDI-X)
Compatible Cables (*) (**)	1000BASE-T: Enhanced category 5 or higher UTP/STP cables 100BASE-TX: Category 5 or higher UTP/STP cables 10BASE-T: Category 3 or higher UTP/STP cables
Connector	RJ-45 8-pin connector (shielded)
Power	AC 100-240 V 50-60 Hz 1-0.5 A
Power Consumption	Max. 9.1 W
External Dimensions	215 x 130 x 43 mm; 8.5" x 5.1" x 1.7" (excluding protruding parts)
Weight	1.1 kg (2.43 lb.)
Operating Environment	Operating temperature: 0–50 ℃ (32-122 °F) Operating humidity: 10–85 % (no condensation)
Standards	VCCI Class A, FCC Class A, Canada IC Class A, UL
Transmission Speeds	1000 Mbps (1000BASE-T) 100 Mbps (100BASE-TX) 10 Mbps (10BASE-T)
Switching Method	Store and forward
Jumbo Frames	Up to 9,216 bytes (including 14 byte header + 4 byte FCS)
Transfer Encryption Method	8B1Q4/4D-PAM5 (1000BASE-T) 4B5B/MLT-3 (100BASE-TX) Manchester encoding (10BASE-T)
Access Method	CSMA/CD
Data Transfer Speed (Throughput)	1,488,095 packets/second (1000BASE-T) 148,810 packets/second (100BASE-TX) 14,881 packets/second (10BASE-T)
MAC Address Table	8,190 (self-learning)
Buffer Memory	512 KBytes
Aging Time	Approx. 300 seconds
Other	Loop prevention Power saving (***)

* This unit automatically detects and adjusts for straight or crossover Ethernet cables, so either type of cable may be used.

** Site-terminated Ethernet cables are not recommended. Always use preassembled cables.

***This function automatically recognizes the port link status and adjusts the operating power accordingly.

Federal Communication Commission Interference Statement

This equipment has been tested and found to comply with the limits for a Class A digital device, pursuant to part 15 of the FCC Rules. These limits are designed to provide reasonable protection against harmful interference when the equipment is operated in a commercial environment. This equipment generates, uses, and can radiate radio frequency energy and, if not installed and used in accordance with the instruction manual, may cause harmful interference to radio communications. Operation of this equipment in a residential area is likely to cause harmful interference in which case the user will be required to correct the interference at his own expense.

This device complies with Part 15 of the FCC Rules. Operation is subject to the following two conditions: (1) this device may not cause harmful interference, and (2) this device must accept any interference received, including interference that may cause undesired operation.

Unless there is no exceptional instruction in the documents of the product, users should not use other accessories (such as cables) than those included in the package.