AKR 019/IX

12NC: 857801918000

GTIN (EAN) code: 8003437214257

SENSING THE DIFFERENCE



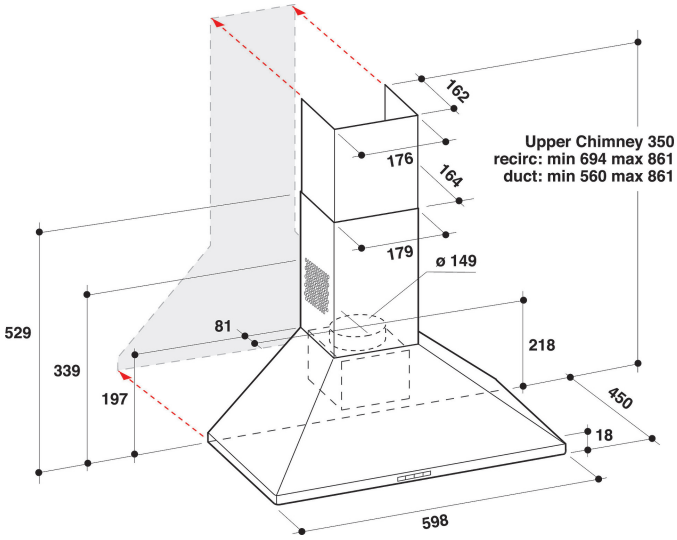

- Maximum noise level 61 dBA
- Noise Level (min. - max.): 45-61 dBA
- Air Flow (min. - max.): 185, 368 m3/h
- Maximum extraction rate: 368 (m3/h)
- Energy class E
- Extraction / Recirculation Rate 416 / 347 m3/h
- 3 speed settings
- Integrated controls
- 2 Halogen, 56 W lamps
- 1 x 120 W motor
- Mechanical Buttons
- 2 Washable aluminium filters
- Grease Filtering Efficiency Class: C
- Lighting Efficiency Class: G
- Fluid Dynamic Efficiency Class: F
- Operating Mode: Air extraction, Recirculating air
- Inox Finishing

Whirlpool wall mounted cooker hood - AKR 019/IX

This Whirlpool wall mounted Cooker Hood features: dishwasher-safe, washable aluminium grease filters. An outstanding cooker extractor fan, ensuring a fresh, grease-free cooking environment. Less than 60cm wide appliance. New design ensuring extra silent performance.

Flexible Installation
Flexible installation options. This Whirlpool Hood can be operated in either Ducted or Recirculated mode (filter needed), so you can enjoy complete freedom when designing your kitchen.

Mechanical control
Effortless control. This Whirlpool Hood includes an analogue control interface designed for simplicity and ease-of-use.

Halogen Lamps
Halogen lamps generate 3 times more light than normal lamps, so you can always see what's cooking.

3 Speeds
Versatile performance. This Whirlpool Hood offers 3 speed options, giving you complete control over the extraction rate.

Super Silent
Silent efficiency. This Whirlpool Hood is designed to operate at low noise-levels, so you can enjoy some extra peace and quiet.

Wall-mounted installation
Wall-mounted installation. This wall-mounted Whirlpool Hood is a breeze to install.

Total annual energy consumption
Ideal performance, outstanding savings. Whirlpool Hoods are designed to provide exceptional results, while reducing energy costs.

2 lights
Perfect lighting. This Whirlpool Hood features two integrated lights, providing ideal illumination, so you'll always be able to see what's cooking.

Energy class E
This is an Energy Class E appliance.

AKR 019/IX

12NC: 857801918000

GTIN (EAN) code: 8003437214257

Whirlpool
SENSING THE DIFFERENCE

MAIN FEATURES

Product group	Hood
Colour body	Inox
Material body	Stainless steel
Colour chimney	Inox
Material chimney	Stainless steel
Typology	Wall-mounted
Installation type	Wall-mounted
Type of control	Mechanical
Type of control settings	-
Decor panel options	N/A
Motor location	Integrated motor in hood body
Operating Mode	Convertible
Electrical connection rating (W)	176
Current (A)	0,8
Voltage (V)	220-240
Frequency (Hz)	50/60
Length of Electrical Supply Cord (cm)	150
Plug type	Europlug
Chimney height (mm)	259-560
Height of product, without chimney (mm)	197
Height of the product	861
Width of the product	598
Depth of the product	450
Minimum niche height	0
Minimum niche width	0
Niche depth	0
Net weight (kg)	6.7

TECHNICAL FEATURES

Type of manual control devices	Buttons
Type of automatic control devices	-
Number of motors	1
Total power of the motors (W)	120
Number of speed settings: boost option availability	3
Boost presence	No
Maximum output air extraction (m^3/h)	416
Boost position air extraction (m^3/h)	0
Maximum output recirculating air (m^3/h)	347
Boost position output recirculating (m^3/h)	0
Light Control Type	On/Off
Number of lights	2
Type of lamps used	Halogen
Total power of the lamps (W)	56
Diameter of air outlet (mm)	150
No-return airflow flap	Yes
Grease filter material	Washable aluminium
Odour filter	No

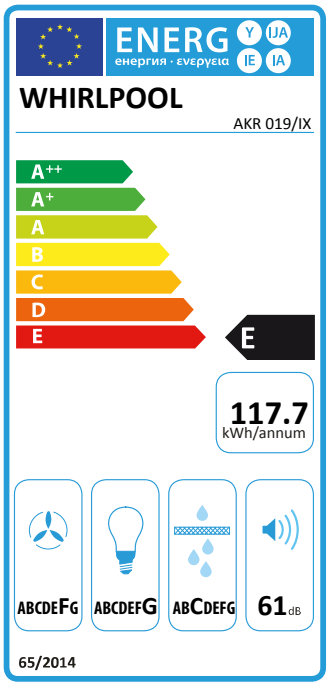

PERFORMANCES

Sound power at min. speed (2010/30/EU)	45
Sound power at max. speed (2010/30/EU)	61
Noise level with boost position (dB(A) re 1 pW)	0