Pricebook

Reference guide and pricebook

Prices effective January 1, 2015



Perfect for Oil and Gas applications,
Eaton.com/OilandGas

Eaton FERRUPS Tower UPS
Learn more at Eaton.com/FERRUPS

EATON
Powering Business Worldwide

Switch ON to Eaton.

REFERENCE GUIDE AND PRICEBOOK
Table of Contents

Introduction

Input Plug and Output Receptacle Chart 3

Ordering Information, Parts, Accessories and Current List Pricing

Eaton Power Distribution, Monitoring and Enclosures

ePDU Basic 5
ePDU Metered Input (Monitored) 7
ePDU Switched 8
ePDU Managed 9
Eaton Automatic Transfer Switches 10
Eaton HotSwap Maintenance Bypass (MBP) 11
ePDU Cables 12
Eclipse Surge Suppressors 13
Eaton S-Series Rack 14
Eaton B-Line 2 & 4 Post Racks and Accessories 18
Environmental Rack Monitor (ERM) 20
Remote Power Panel (RPP) 22
Power Distribution Rack (PDR) 26
Eaton Branch Circuit Breakers 28
Eaton Energy Management System Upgrade Kit 29
UL Listed Power Distribution Cables 30

Single-phase Products

Catalog Number Ordering Instructions for Single-phase Products 33

Single-phase (Standby)

Eaton 3S UPS (350–750 VA) 34

Single-phase (Line-interactive)

Eaton 5S UPS (550–1500 VA) 35
Eaton 5SC UPS (550–1500 VA) 36
Eaton 5P UPS Rackmount (550–3000 VA) 37
Eaton 5P UPS Tower (750–3000 VA) 39
Eaton 5PX UPS Rack/Tower (1000–3000 VA) 40

Single-phase (Online)

Eaton EX UPS (700–3000 VA) 42
Eaton 9130 UPS Rack (700–3000 VA) 45
Eaton 9130 UPS Tower (700–3000 VA) 48
Eaton 9PX SP UPS Rack/Tower (6-10 kVA) 50
Eaton 9PX UPS Rack/Tower (5–6 kVA) 52
Eaton 9PX UPS Rack/Tower (8–11kVA) 54
Eaton 9155 UPS (8–15 kVA) 56
Eaton 9170+ UPS Rack/Tower (3–18 kVA) 59

Series FERRO

Eaton FERRUPS FE UPS 60 Hz (500–3100 VA) 64
Eaton FERRUPS UPS Rack Series (1.4 kVA–7 kVA) 66
Eaton FERRUPS UPS External Options & Accessories 67

(table of contents continued on next page)

REFERENCE GUIDE AND PRICEBOOK

Table of Contents *(continued)*

Ordering Information, Parts, Accessories and Current List Pricing *(continued)*

Three-phase (Double-conversion)

Eaton BladeUPS (12–60 kW) 69
Eaton 9355 UPS (10–15 kVA) 77
Eaton 9355 UPS (20–30 kVA) 80
Eaton Emergency Lighting UPS (10–30 kVA) 83
Eaton 93E UPS (20–60 kVA) 84
Eaton 93PM UPS (20–50 kW) 90
Eaton 9390IT UPS (40–160 kVA) 93

Additional Products

Ultra-isolator Noise Suppressors 97
Power Conditioners 98
Metering Products 102
Software Products 123
Connectivity Products 124
Surge Protection Products – PSPD Series 127
Surge Protection Products – PSPV Series 131
Surge Protection Devices 132

Services

Single-phase Service Plans Overview 134
Single-phase Service Plans 135
Three-phase Service Plans Overview 141
Time and Material Service Rate Schedule 142

RMA Policy and Product Warranties

Sales Returned Merchandise Authorization (RMA) Policy 143
Product Warranty Statements 144

Notes: Due to continuing product improvement programs, all specifications and prices are subject to change without notice.

With the exception of batteries, any UPS parts or parts kit pricing that is included in this reference guide is based on a concurrent purchase of a new unit(s). Pricing for parts or parts kits purchases made separately from a concurrent unit purchase must be obtained from the Eaton Customer Support Center at 800.356.5737.

RECEPTACLE CHART

Input Plug and Output Receptacle Chart

5-15R 	**5-15P** 	**5-20R** 	**5-20P** 
L5-20R 	**L5-20P** 	**L5-30R** 	**L5-30P** 
6-15R 	**6-15P** 	**L6-20R** 	**L6-20P** 
L6-30R 	**L6-30P** 	**L14-30R** 	**L14-30P** 
IEC-320-C13 (female) 	**IEC-320-C14 (male)** 	**IEC-320-C19 (female)** 	**IEC-320-C20 (male)** 
IEC-309, 16A 	**IEC-309, 32A** 		

R indicates receptacle
P indicates plug
L indicates locking plug or receptacle

EATON POWER DISTRIBUTION, MONITORING AND ENCLOSURES

Eaton ePDU Catalog Numbering System

Eaton Generation 1 (G1) model numbering: Eaton's smart part numbers help our customers understand our numbering system. Follow the example below to see what the letters and numbers mean within our ePDU catalog numbers.

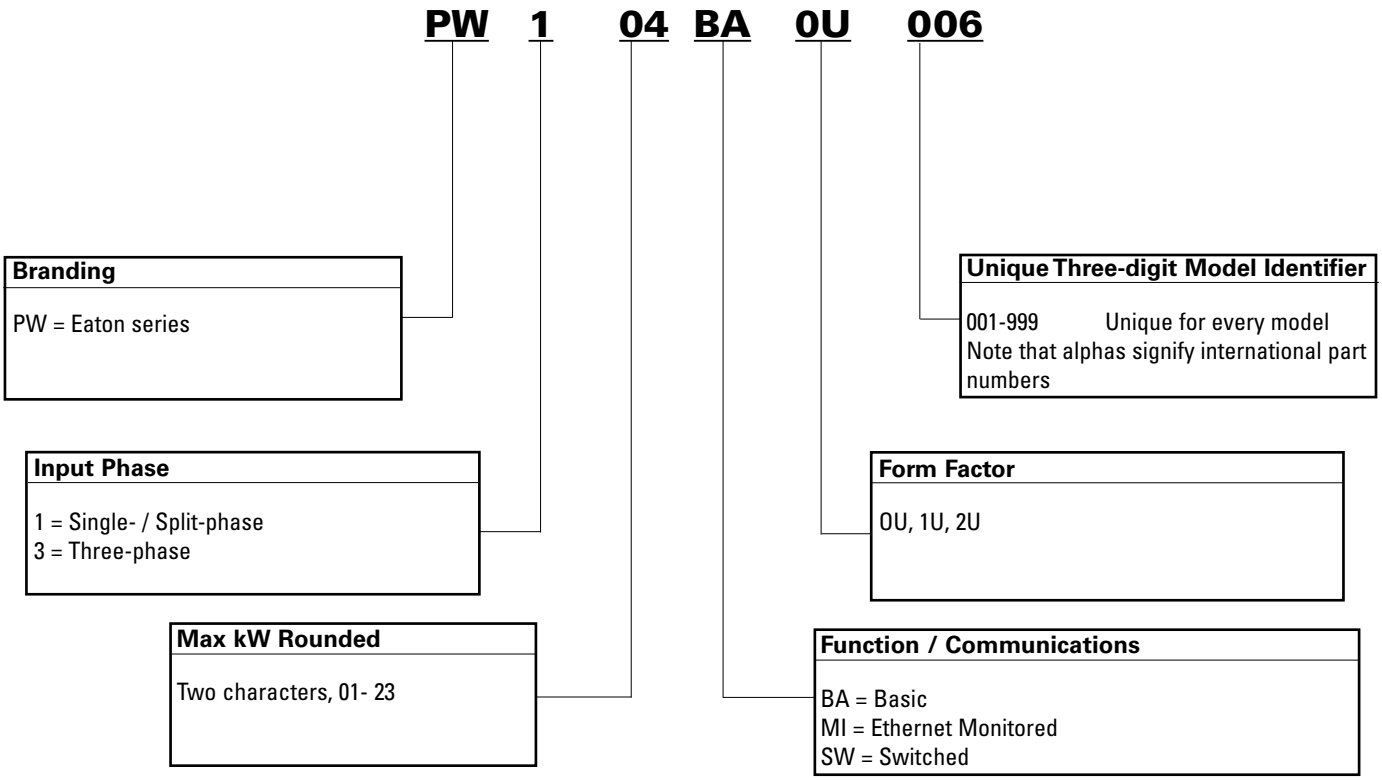

Eaton Generation 2 (G2) model numbering:

ePBZ
BZ = Basic

eMA
MA = Managed

eAM
AM = Advanced Monitored

Eaton Generation 3 (G3) model numbering:

EBA
BA = Basic

EMI
MI= Metered Input

EATON POWER DISTRIBUTION, MONITORING AND ENCLOSURES
Basic ePDUs

Basic ePDUs are designed for reliable and cost-effective power distribution.



- Available in horizontal and vertical design
- Clearly labeled circuits simplify load balancing
- Cost effective solutions to meet Basic needs

New G3 models feature IEC grip outlets and color-coded outlet sections as well as high-operating temperatures (up to 140F).

Basic ePDUs

Catalog Number	Max. kW	Function	Cord Length (ft)	Input Plug	Output Receptacles	Dimensions (H x W x D, inches)	List Price
Horizontal Mount Models							
ePBZ78	2.88	BA	15	L5-30P	(20) 5-20R	1.7 x 17.0 x 3.5	$259
ePBZ79	4.99	BA	15	L6-30P	(16) C13, (4) C19	1.7 x 17.0 x 5.1	$259
ePBZ82	1.92	BA	15	L5-20P/5-20P*	(12) 5-20R	1.7 x 17.3 x 2.3	$148
ePBZ83	1.44	BA	15	5-15P	(12) 5-15R	1.7 x 17.3 x 2.3	$99
ePBZ84	2.88	BA	10	L5-30P	(10) 5-20R	1.7 x 17.0 x 3.5	$226
ePBZ85	1.92	BA	10	5-20P	(12) 5-20R	1.7 x 17.3 x 2.3	$119
ePBZ86	1.44	BA	10	5-15P	(12) 5-15R	1.7 x 17.3 x 2.3	$99
ePBZ88	3.33	BA	6	C20	(10) C13, (2) C19	1.7 x 19.0 x 2.4	$129
ePBZ91	4.99	BA	10	L6-30P	(10) C13	1.7 x 17.0 x 3.5	$209
ePBZ94	4.99	BA	6	L6-30P	(6) C19	1.7 x 19.0 x 2.4	$229
ePBZ95	3.33	BA	6	L6-20P	(12) C13, (1) C19	1.7 x 19.0 x 2.4	$129
ePBZ99	1.92	BA	6	L5-20P	(12) 5-20R	1.7 x 19.0 x 2.4	$119
EFLXI3000R-PDU1UIEC	3.33	BA	3	C20	(12) C13, (1) C19	1.7 x 17.3 x 2.4	$157
EFLXL1500R-PDU1U	1.44	BA	3	5-15P	(12) 5-15R	1.7 x 17.3 x 2.4	$94
EFLXL2000R-PDU1U	1.92	BA	3	5-20P	(12) 5-20R	1.7 x 17.3 x 2.4	$104
EFLXL2000R-PDU1UL	1.92	BA	3	5-20P	(5) L5-20R	1.7 x 17.3 x 2.4	$136
PW101BA1U140	1.44	BA	9	5-15P	(12) 5-15R	1.7 x 19.0 x 7.0	$253
PW102BA1U158	1.92	BA	9	5-20P	(12) 5-20R	1.7 x 19.0 x 7.0	$256
PW102BA1U159	1.92	BA	9	L5-20P	(12) 5-20R	1.7 x 19.0 x 7.0	$266
PW103BA1U190	2.88	BA	9	L5-30P	(12) 5-20R	1.7 x 19.0 x 7.0	$279
PW103BA1U191	3.33	BA	9	L6-20P	(12) C13	1.7 x 19.0 x 7.0	$335
PW103BA1U405	3.33	BA	9	C20	(16) C13	1.7 x 19.0 x 7.0	$241
PW103BA1U406	4.99	BA	9	L6-30P	(16) C13	1.7 x 19.0 x 7.0	$418
PW105BA1U163	4.99	BA	9	L6-30P	(12) C13	1.7 x 19.0 x 7.0	$387
PW105BA1U192	4.99	BA	9	L6-30 P	(8) C13, (4) C19	1.7 x 19.0 x 7.0	$414
PW105BA1U404	4.99	BA	9	L14-30P	(12) 5-15R	1.7 x 19.0 x 7.0	$469
PW105BA2U420	4.99	BA	9	L6-30P	(4) L6-20R	3.4 x 19.0 x 6.0	$579
PW105BA2U422	4.99	BA	9	L14-30P	(4) L6-20R	3.4 x 19.0 x 6.0	$649
PW314BA1U193	14.40	BA	9	CS8365	(6) C19	1.7 x 17.0 x 7.0	$729
Vertical Mount Models							
ePBZ71	1.92	BA	15	5-20P/L5-20P*	(30) 5-20R	72.0 x 1.5 x 1.5	$279
EBA300-06	14.4	BA	6	CS8365	(24) C13, (4) C19, (2) L6-30P	66.5 x 2.05 x 2.1	$1,190
EBA301-10	5.76	BA	10	L15-20P	(30) C13, (6) C19	66.5 x 2.05 x 2.1	$553
EBA302-10	5.76	BA	10	L21-20P	(30) C13, (6) C19	66.5 x 2.05 x 2.1	$510
EBA303-10	8.64	BA	10	L15-30P	(30) C13, (6) C19	66.5 x 2.05 x 2.1	$808
EBA304-10	8.64	BA	10	L21-30P	(30) C13, (6) C19	66.5 x 2.05 x 2.1	$808
EBA305-06	12.48	BA	6	CS8365	(30) C13, (6) C19	66.5 x 2.05 x 2.1	$876
EBA306-06	14.4	BA	6	CS8365	(21) C13, (12) C19	66.5 x 2.05 x 2.1	$1,190
EBA307-06	17.3	BA	6	IEC60309 460P9	(21) C13, (12) C19	66.5 x 2.05 x 2.1	$1,258
EBA308-10	5.76	BA	10	L21-20P	(21) 5-20R, (6) L6-20R	66.5 x 2.05 x 2.1	$430
EBA309-10	5.76	BA	10	L21-20P	(39) 5-20R	66.5 x 2.05 x 2.1	$430
EBA310-10	8.64	BA	10	L21-30P	(30) C13, (6) C19, (1) 5-20R	66.5 x 2.05 x 2.1	$638
EBA311-10	5.76	BA	10	L15-20P	(42) C13	69.5 x 2.05 x 2.1	$553
EBA312-10	5.76	BA	10	L21-20P	(42) C13	69.5 x 2.05 x 2.1	$553
EBA313-10	8.64	BA	10	L15-30P	(42) C13	69.5 x 2.05 x 2.1	$765
EBA314-10	8.64	BA	10	L21-30P	(42) C13	69.5 x 2.05 x 2.1	$765
EBA315-10	12.48	BA	10	CS8365	(42) C13	69.5 x 2.05 x 2.1	$1,020
ePBZ72	1.92	BA	15	5-20P/L5-20P*	(18) 5-20R	48.0 x 1.5 x 1.5	$209
ePBZ73	1.44	BA	15	5-15P	(18) 5-15R	48.0 x 1.5 x 1.5	$149
ePBZ74	1.92	BA	15	5-20P/L5-20P*	(14) 5-20R	24.0 x 1.5 x 1.5	$169
ePBZ75	1.44	BA	15	5-15P	(14) 5-15R	24.0 x 1.5 x 1.5	$119
ePBZ77	1.92	BA	15	L5-20P/5-20P	(24) 5-20R	60.0 x 1.5 x 1.5	$219
ePBZ80	4.99	BA	10	L6-30P	(30) C13, (6) C19	52.9 x 1.9 x 2.1	$299

EATON POWER DISTRIBUTION, MONITORING AND ENCLOSURES

Basic ePDUs *(continued)*

Basic ePDUs *(continued)*

Catalog Number	Max. kW	Function	Cord Length (ft)	Input Plug	Output Receptacles	Dimensions (H x W x D, inches)	List Price
Basic ePDUs (continued)							
Vertical Mount Models (continued)							
ePBZ89	1.44	BA	6	C14	(16) C13	28.0 x 2.2 x 1.9	$99
ePBZ90	2.88	BA	15	L5-30P	(24) 5-20R	40.0 x 1.9 x 2.1	$269
ePBZ92	4.99	BA	6	L6-30P	(20) C13, (4) C19	42.0 x 2.2 x 1.9	$279
ePBZ93	3.33	BA	6	L6-20P	(20) C13, (4) C19	42.0 x 2.2 x 1.9	$229
ePBZ96	1.92	BA	6	L5-20P	(24) 5-20R	60.0 x 1.5 x 1.5	$199
ePBZ97	1.92	BA	6	5-20P	(24) 5-20R	60.0 x 1.5 x 1.5	$149
ePBZ98	1.44	BA	6	5-15P	(18) 5-15R	48.0 x 1.5 x 1.5	$99
PW103BA0U237	3.33	BA	9	L6-20P	(24) C13, (4) C19	66.0 x 1.9 x 2.0	$524
PW103BA0U257	2.88	BA	9	L5-30P	(24) 5-20R	66.0 x 1.9 x 2.0	$474
PW105BA0U239	4.99	BA	9	L6-30P	(24) C13, (4) C19	66.0 x 1.9 x 2.0	$536
PW105BA0U412	4.99	BA	6	L14-30P	(12) 5-15R	10.0 x 7.8 x 3.0	$349
PW105BA0U421	4.99	BA	9	L14-30P	(24) 5-20R	66.0 x 1.9 x 2.0	$599
PW309BA0U409	8.65	BA	9	L21-30P	(24) 5-20R	66.0 x 1.9 x 2.0	$879

* These units ship with an adapter allowing for 5-20P input plug.

SERVICES

For detailed information on service plans, please refer to the Single-phase Service section on page 135.

EATON POWER DISTRIBUTION, MONITORING AND ENCLOSURES
Metered Input ePDUs

Metered Input models provide input phase and branch circuit monitoring. These ePDUs feature an LED or pixel LCD display that shows current draw for branch circuit loading and phase balancing. All models offer remote monitoring over a network connection.

- Clearly labeled circuits simplify load balancing
- Local current meter display
- Remote monitoring with network connection



Metered Input ePDUs

Catalog Number	Max. kW	Function	Cord Length (ft)	Input Plug	Output Receptacles	Dimensions (H x W x D, inches)	List Price
Horizontal Mount Models							
PW101MI1U221	1.44	MI	9	5-15P	(12) 5-15R	1.7 x 17.0 x 7.0	$434
PW101MI1U403	1.44	MI	9	5-15P	(12) 5-20R	1.7 x 17.0 x 7.0	$480
PW102MI1U160	1.92	MI	9	L5-20P	(12) 5-20R	1.7 x 17.0 x 7.0	$493
PW103MI1U161	2.88	MI	9	L5-30P	(12) 5-20 R	1.7 x 17.0 x 7.0	$556
PW103MI1U162	3.33	MI	9	L6-20P	(12) C13	1.7 x 17.0 x 7.0	$516
PW105MI1U164	4.99	MI	9	L6-30P	(12) C13	1.7 x 17.0 x 7.0	$682
PW105MI1U165	4.99	MI	9	L6-30P	(6) C13, (4) C19	1.7 x 17.0 x 7.0	$629
PW105MI2U402	4.99	MI	9	L6-30P	(20) C13	3.4 x 19.0 x 7.0	$734
PW317MI2U141	17.29	MI	9	IEC30960 460P9W	(12) C19	3.4 x 19.0 x 9.5	$1,417
Vertical Models (ePDU G3)							
EMI100-10	1.44	MI	10	5-15P	(24) 5-15R	66.5 x 2.05 x 2.1	$561
EMI101-10	1.92	MI	10	5-20P/L5-20P*	(24) 5-20R	66.5 x 2.05 x 2.1	$600
EMI102-10	2.88	MI	10	L5-30P	(30) 5-20R	66.5 x 2.05 x 2.1	$667
EMI103-10	3.84	MI	10	C20 (L6-20 cord included)	(18) C13, (2) C19	35.5 x 2.05 x 2.1	$614
EMI104-10	5.76	MI	10	L6-30P	(36) C13, (6) C19	66.5 x 2.05 x 2.1	$799
EMI300-06	14.4	MI	6	CS8365	(24) C13, (4) C19, (2) L6-30R	66.5 x 2.05 x 2.1	$1,445
EMI301-10	5.76	MI	10	L15-20P	(30) C13, (6) C19	66.5 x 2.05 x 2.1	$850
EMI302-10	5.76	MI	10	L21-20P	(30) C13, (6) C19	66.5 x 2.05 x 2.1	$850
EMI303-10	8.64	MI	10	L15-30P	(30) C13, (6) C19	66.5 x 2.05 x 2.1	$1,224
EMI304-10	8.64	MI	10	L21-30P	(30) C13, (6) C19	66.5 x 2.05 x 2.1	$1,224
EMI305-06	12.48	MI	6	CS8365	(30) C13, (6) C19	66.5 x 2.05 x 2.1	$1,349
EMI308-10	5.76	MI	10	L21-20P	(21) 5-20R, (6) L6-20R	66.5 x 2.05 x 2.1	$697
EMI309-10	5.76	MI	10	L21-20P	(39) 5-20R	66.5 x 2.05 x 2.1	$697
EMI310-10	8.64	MI	10	L21-30P	(30) C13, (6) C19, (1) 5-20R	66.5 x 2.05 x 2.1	$1,243
EMI311-10	5.76	MI	10	L15-20P	(42) C13	69.5 x 2.05 x 2.1	$850
EMI312-10	5.76	MI	10	L21-20P	(42) C13	69.5 x 2.05 x 2.1	$850
EMI313-10	8.64	MI	10	L15-30P	(42) C13	69.5 x 2.05 x 2.1	$1,224
EMI314-10	8.64	MI	10	L21-30P	(42) C13	69.5 x 2.05 x 2.1	$1,224
EMI315-10	12.48	MI	10	CS8365	(42) C13	69.5 x 2.05 x 2.1	$1,475
EMI316-06	14.4	MI	6	CS8365	(9) C13, (12) C19	66.5 x 2.05 x 2.1	$1,408
EMI317-06	17.3	MI	6	IEC60309 460P9	(9) C13, (12) C19	66.5 x 2.05 x 2.1	$1,615
EMI318-10	5.76	MI	10	L21-20P	(30) C13, (6) C19, (3) 5-20R	66.5 x 2.05 x 2.1	$850

* These units ship with an adapter allowing for 5-20P input plug.

Environmental Probes

Catalog Number	Description	Price
EMP001	Environmental Monitoring Probes for AM and MA	$220

SERVICES

For detailed information on service plans, please refer to the Single-phase Service section on page 135.

EATON POWER DISTRIBUTION, MONITORING AND ENCLOSURES
Switched ePDUs

Outlet switching is included on all models and some models offer branch current monitoring. Outlet switching is ideal for remote site management to reboot outlets or turn outlets off when not being used. All vertical monitors accommodate optional environmental proves.

- Individually control outlets via Serial or Ethernet connection
- Voltage Monitoring and Current Monitoring
- Local current meter display shows current draw



Switched ePDUs

Catalog Number	Max. kW	Function	Cord Length (ft)	Input Plug	Output Receptacles	Dimensions (H x W x D, inches)	List Price
Horizontal Mount Models							
PW103SW2U413	3.33	SW	9	C20	(8) C13	1.7 x 19.0 x 9.5	$787
PW103SW2U414	3.33	SW	9	C20	(8) 5-15R	1.7 x 19.0 x 9.5	$787
PW105SW2U223	4.99	SW	9	L6-30P	(20) C13	1.7 x 19.0 x 9.5	$1,469
PW105SW2U415	4.99	SW	9	L6-30P	(20) C13, (4) C19	1.7 x 19.0 x 9.5	$1,469
Vertical Mount Models							
PW101SW0U224	1.44	SW	9	5-15P	(16) 5-15R	68.0 x 1.9 x 2.0	$1,229
PW102SW0U150	1.92	SW	9	L5-20P	(8) 5-15R	42.0 x 1.9 x 2.0	$949
PW102SW0U151	1.92	SW	9	L5-20P	(24) 5-15R	66.0 x 1.9 x 2.0	$1,399
PW103SW0U153	3.33	SW	9	L6-20P	(24) C13	66.0 x 1.9 x 2.0	$1,399
PW306SW0U155	5.76	SW	9	L21-20P	(24) 5-15R	66.0 x 1.9 x 2.0	$1,399
PW317SW0U400	17.29	SW	9	IEC 60309P 3P + PE	(18) C13, (6) C19	66.0 x 2.0 x 4.0	$2,309

Environmental Probes

Catalog Number	Description	Price
SENSOR-T1-10	Sensor with 1 Temperature Probe	$79
SENSOR-T1H1-10	Sensor with 1 Temperature Probe 1 Humidity Probe	$99
SENSOR-T2-10	Sensor with 2 Temperature Probes	$169
SENSOR-T2H1-10	Sensor with 2 Temperature Probes 1 Humidity Probe	$179

SERVICES

For detailed information on service plans, please refer to the Single-phase Service section on page 135.

EATON POWER DISTRIBUTION, MONITORING AND ENCLOSURES
Advanced Monitored and Managed ePDUs

Managed ePDUs include outlet switching and metered outlets. Switching allows you to power cycle (reboot) locked servers or turn off unused outlets. Outlet level monitoring of voltage, current, power and energy (KWH) provides necessary measurements to calculate Level 3 PUE and to run capacity /usage analytics.

- Monitor power consumption in kilowatt hours at the individual outlet level requirement
- Readings available via Ethernet connection over a network (utilizing Eaton's Intelligent Power Manager)
- Power consumption readings allow for Power Usage Effectiveness calculations



Advanced Monitored and Managed ePDUs

Catalog Number	Max. kW	Function	Cord Length (ft)	Input Plug	Output Receptacles	Dimensions (H x W x D, inches)	List Price
Vertical Mount Models							
eMA006	5.8	MA	10	L21-20P	(21) C13, (3) C19	60.0 x 2.2 x 2.6	$1,300
eMA011	8.6	MA	10	L21-30P	(21) C13, (3) C19	68.0 x 2.2 x 2.6	$1,570
eMA012	3.3	MA	10	C20 (L6-20 cord included)	(20) C13, (4) C19	60.0 x 2.2 x 2.6	$1,020
eMA013	11.5	MA	10	IEC309 16A	(12) C13, (12) C19	68.0 x 2.2 x 2.6	$1,720
eMA014	17.3	MA	10	IEC309 32A	(12) C13, (12) C19	72.4 x 2.2 x 2.6	$2,160

Advanced Monitored–Outlet level monitoring of voltage, current, power and energy (KWH).Provides necessary measurements to calculate Level 3 PUE and to run capacity /usage analytics. Advanced local display and color coded silk screen.

Vertical Mount Models							
eAM001	5.8	AM	10	L6-30P	(20) C13, (4) C19	68.0 x 2.2 x 2.6	$1,030
eAM002	5.8	AM	10	L21-20P	(21) C13, (3) C19	60.0 x 2.2 x 2.6	$1,030
eAM003	12.6	AM	10	CS8365	(21) C13, (3) C19	68.0 x 2.2 x 2.6	$1,420
eAM004	8.6	AM	10	L21-30P	(21) C13, (3) C19	68.0 x 2.2 x 2.6	$1,420
eAM005	17.3	AM	10	IEC60309 460P9	(12) C13, (12) C19	72.4 x 2.2 x 2.6	$2,240
eAM008	3.3	AM	10	C20 (L6-20 cord included)	(20) C13, (4) C19	60.0 x 2.2 x 2.6	$920

Environmental Probes

Catalog Number	Description	Price
EMP001	Environmental Monitoring Probes for AM and MA units	$220

Accessories

Catalog Number	Description	Price
KBLT01	Plug Restraint Cable Tray for AM and MA units	$83

SERVICES

For detailed information on service plans, please refer to the Single-phase Service section on page 135.

EATON POWER DISTRIBUTION, MONITORING AND ENCLOSURES

Eaton Automatic Transfer Switches

eATS (Automatic Transfer Switch) and STS (Source Transfer Switch) ePDUs—Designed for switching non-phase synchronized AC power sources, the automatic transfer switch ePDUs' intelligent circuitry monitors both inputs, providing a fast switch transfer from primary to secondary source power critical equipment without interruption. These ePDUs assure the highest level of redundancy to mission-critical applications.

- 1U configurations available
- Custom designs upon request

eATS (Automatic Transfer Switch) and STS (Source Transfer Switch) ePDUs

Catalog Number	Max. kW	Function	Cord Length (ft)	Input Plug	Output Receptacles	Dimensions (H x W x D, inches)	List Price
Horizontal Mount Models							
PULSTS1400R-1U	1.44	AT	6	(2) 5-15P	(6) 5-15R	1.7 x 19.0 x 9.8	$300
PULSTS16AMPR-1U	3.33	AT	-	(2) C20	(6) C13, (1) C19	1.7 x 16.9 x 9.8	$310
PWATSL520004	1.92	AT	9	(2) L5-20P	(8) 5-20R	1.7 x 19.0 x 7.0	$734
PWATSL530005	2.88	AT	9	(2) L5-30P	(8) 5-20R	1.7 x 19.0 x 7.0	$787
PWATSL530007	2.88	AT	9	(2) L5-30P	(1) L5-30R	1.7 x 19.0 x 7.0	$787
PWATSL630006	4.99	AT	9	(2) L6-30P	(12) C13	1.7 x 19.0 x 7.0	$839
PWATSL630008	4.99	AT	9	(2) L6-30P	(1) L6-30R	1.7 x 19.0 x 7.0	$787
PWATSS515002	1.44	AT	9	(2) 5-15P	(8) 5-15R	1.7 x 19.0 x 7.0	$629
PWATSS520003	1.92	AT	9	(2) 5-20P	(8) 5-20 R	1.7 x 19.0 x 7.0	$682
PWATSSC20001	3.33	AT	-	(2) C20	(8) C13, (1) C19	1.7 x 19.0 x 7.0	$629

EATON POWER DISTRIBUTION, MONITORING AND ENCLOSURES

Eaton HotSwap Maintenance Bypass (MBP)

HotSwap MBP—Facilitating hot-swappable UPS replacement from the rack—the HotSwap MBP is also ideal when exchanging a faulty unit or upgrading to a new UPS. The HotSwap MBP offers receptacles in 5-15R and 5-20R.



- Gain additional receptacles on UPSs
- Provide service continuity during battery replacement, UPS maintenance or upgrade
- Ease installation with flexible mounting options (rear panel, the top, on the left or on the right of the UPS (depending on the UPS model)
- Accommodate most space constraints with minimal depth 1U form factor

HOTSWAP MBP

Catalog Number	Max. kW	Function	Cord Length	Input Connection	Output Receptacles (Quantity)	Dimensions (H x W x D, inches)	List Price
EHBPL1500R-PDU1U	1.44	BA	3'	5-15P	(6) 5-15R	2.1 x 3.8 x 17.3	$242
EHBPL2000R-PDU1U	1.92	BA	3'	5-20P	(6) 5-15R	2.1 x 3.8 x 17.3	$289
EHBPL3000R-PDU1U	2.88	BA	3'	L5-30P	(5) 5-20R	2.1 x 3.8 x 17.3	$420

HotSwap MBP	UPS model (North American only)
15	Eaton Evolution Rack UPS, 650–1550 VA
	Eaton 5PX Rack/Tower UPS, 1000-1500 VA
	Eaton 9130 Rack UPS, 700–1500 VA
	Eaton EX Rack UPS, 1000–1500 VA
20	Eaton Evolution Rack/Tower UPS, 2000 VA
	Eaton 5PX Rack/Tower UPS, 2200 VA
	Eaton 9130 Rack UPS, 2000 VA
	Eaton EX Rack/Tower UPS, 2200 VA
30	Eaton 5PX Rack/Tower UPS, 3000 VA
	Eaton 9130 Rack UPS, 2500–3000 VA
	Eaton EX Rack/Tower UPS, 3000 VA



EATON POWER DISTRIBUTION, MONITORING AND ENCLOSURES

ePDU Cables

- **Adapters** to enable equipment with disparate input/output receptacles to work together
- **Jumpers** to connect two pieces of equipment without cluttering up the cable arrangement
- **Splitters** to add extra equipment to a UPS or PDU without using up more outlets

All Eaton power cables are tested and certified for use with Eaton products, such as ePDUs, rack power modules (RPMs) and UPSs—proven to deliver the reliability and service life needed for the most rigorous data center applications.

- Choose from adapters, jumpers and splitters for any rack power distribution application
- Select from a broad range of input/output connectors
- Streamline cabling in Enclosures by deploying exactly the cable length needed
- Count on assured performance with pre-tested products that meet UL and Eaton standards

Adapter Cables

Catalog Number	Description	Leads	Input Plug	Output	Length (ft)	Price
010-0020	10 ft IEC320-C14 to IEC320-C13 Jumper Cable	1	C14	C13	10	$17
010-0021	7 ft IEC320-C14 to IEC320-C13 Jumper Cable	1	C14	C13	7	$14
010-0024	15 ft IEC320-C14 to IEC320-C13 Jumper Cable	1	C14	C13	15	$20
010-0025	8 ft IEC320-C14 to IEC320-C13 Jumper Cable	1	C14	C13	8	$15
010-0026	8 ft C19 TO Bare Wire Cable	1	Bare Wire	C19	8	$16
010-0027	6 ft IEC320-C14 to IEC320-C13 Jumper Cable	1	C14	C13	6	$13
010-0028	4 ft IEC320-C14 to IEC320-C13 Jumper Cable	1	C14	C13	4	$11
010-0029	2 ft IEC320-C14 to IEC320-C13 Jumper Cable	1	C14	C13	2	$9
010-0032	1 ft IEC320-C14 to 5-15R Adapter Cable	1	C14	5-15R	1	$15
010-0034	8 ft IEC320-C19 to Bare Wire Adapter Cable	1	C19	Bare	8	$32
010-9332	8 ft IEC320-C13 to 5-15P Jumper Cable	1	5-15P	C13	8	$16
010-9334	8 ft IEC320-C19 to 5-15P Adapter Cable	1	5-15P	C19	8	$21
010-9335	8 ft IEC320-C19 to 5-20P Adapter Cable	1	5-20P	C19	8	$27
010-9336	8 ft IEC320-C19 to 6-15P Adapter Cable	1	6-15P	C19	8	$32
010-9337	8 ft IEC320-C19 to 6-20P Adapter Cable	1	6-20P	C19	8	$32
010-9338	8 ft IEC320-C19 to L5-15P Adapter Cable	1	L5-15P	C19	8	$37
010-9339	8 ft IEC320-C19 to L5-20P Adapter Cable	1	L5-20P	C19	8	$27
010-9341	8 ft IEC320-C19 to L6-20P Adapter Cable	1	L6-20P	C19	8	$32
010-9342	8 ft IEC320-C19 to IEC320-C20 Adapter Cable	1	C20	C19	8	$32
010-9343	8 ft SCHUCKO to IEC320-C19 Adapter Cable	1	C19	SCHUCKO	8	$30
010-9345	8 ft AS/NZS 3112 to IEC320-C19 Adapter Cable	1	C19	AS/NZS 3112	8	$35
010-9351	8 ft British to IEC320-C19 Adapter Cable	1	C19	British Connector	8	$27
010-9365	8 ft IEC320-C14 to IEC320-C19 Jumper Cable	1	C19	C14	8	$33
CBL146	30 ft Power Cord Assembly 10/3 SOOW 2" Pigtails	2	Pigtails	Pigtails	30	$138
CBL147	Cable Assembly High Volt Cover, 15 ft 10/3 SOOW, L6-30P	1	L6-30P		15	$147
SUB-PWRCORD-908	8 ft L6-30R to L6-30P Adapter Cable	1	L6-30P	L6-30R	8	$56

Splitter Cables

Catalog Number	Description	Leads	Input Plug	Output	Length (ft)	Price
CBL139	Splitter Cable L14-30P to (2) L6-30R (4ft/2ft)	2	L14-30P	L6-30R	4	$158
CBL143	Splitter Cable L14-30P to (2) L5-30R (4ft/2ft)	2	L14-30P	L5-30R	4	$158
CBL148	Splitter Cable L14-20P to (2) L5-20R (4ft/2ft)	2	L14-20P	L5-20R	4	$169
CBL149	Splitter Cable L21-30P to (3) L5-30R (4ft/2ft/1ft)	3	L21-30P	L5-30R	4	$157
CBL150	Splitter Cable L21-20P to (3) L5-20R (4ft/2ft/1ft)	3	L21-20P	L5-20R	4	$229

EATON POWER DISTRIBUTION, MONITORING AND ENCLOSURES

ePDU Cables *(continued)*

Accessories

Catalog Number	Description	Price
010-0322	C19 Receptacle Connector	$14
035-0113	C13 Outlet Cap	$3
001-0819-1	Mounting Bracket Right	$19
001-0819-2	Mounting Bracket Left	$19
001-1393-1	Mounting Bracket Adjustable Black - RoHS Compliant	$6
001-1928-1	Side Mounting Bracket	$26
001-1995-1	Bracket	$31
SUB-HRDWARE-017	VPC Bracket - Standard, Offset	$12
SUB-HRDWARE-032	Mounting Bracket	$5
SUB-HRDWARE-038	Tool-less Mounting Kit	$3

ECLIPSE SURGE SUPPRESSORS

Pulsar series

The Eclipse is Ideal for all uses—computer, peripheral, stereo and video—total protection against power surges, spikes, nearby lightning strikes and line noise.

- Up to 1020 joule rating
- Master on/off switch
- Instantaneous response time
- Visual alarm(s)
- Audible alarm (except personal)
- Circuit breaker and thermal fuse protection
- 360º rotating plug (except personal)



Eclipse Surge Suppressors

Catalog Number	Style Number	Description	Dimensions (H x W x D, inches)	Weight (lb)	List Price*
ECLL1800-PER	83500	ECLIPSE Personal 120V 1800W (6) 5-15R	2.00 x 1.25 x 11.00	1.0	$240
ECLL1800-PRO	83501	ECLIPSE Pro 120V 1800W (8) 5-15R	3.88 x 1.31 x 9.75	1.5	$450
ECLL1800-PROTEL	83502	ECLIPSE ProTel 1800W (8) 5-15R	3.88 x 1.31 x 9.75	1.5	$490

* List price reflects minimum purchase quantity of 20 pieces.

EATON POWER DISTRIBUTION, MONITORING AND ENCLOSURES

S-Series Rack



Designed for small and medium-sized businesses, the Eaton S-Series Rack manage and support your critical IT equipment. These standard configured racks are scalable and integrate an array of options including cable management, power distribution and backup power to provide a full network solution.

- Fully-welded steel frame that can store up to 2,200 pounds of computer and networking equipment
- Enhanced frame ensures zero leakage around the front perimeter and also features oval grommets in front frame verticals for cable pass-thru between racks
- Split rear doors provide easier access and maneuverability in data center environments
- Top panel with two six-inch wide brushed openings for cable egress
- Guaranteed compatibility with EIA-310 standard size equipment
- A wide range of cable management options enhance cable routing horizontally and vertically
- Split rear doors provide easy access and maneuverability

S-SERIES RACK

		Dimensions (H x W x D, inches)			List
Part Number	**Description**	**Shipping**	**Installed**	**Weight (lb)**	**Price**
ETN-ENC422442SE	Eaton Rack 42Ux24x40 4 post (no sides/doors/divide/castors)	87 x 38 x 60	81 x 24 x 41	171	$1,545
ETN-ENC422442S	Eaton Rack 42Ux24x42 w/doors/top/divider/castors	87 x 38 x 60	81 x 24 x 42	309	$2,645
ETN-ENC422448S	Eaton Rack 42Ux24x48 w/doors/top/divider/castors	87 x 38 x 60	81 x 24 x 48	321	$3,310
ETN-ENC423042S	Eaton Rack 42Ux30x42 w/doors/top/divider/castors	87 x 38 x 60	81 x 30 x 42	351	$3,410
ETN-ENC423048S	Eaton Rack 42Ux30x48 w/doors/top/divider/castors	87 x 38 x 60	81 x 30 x 48	364	$3,910
ETN-ENC482442S	Eaton Rack 48Ux24x42 w/doors/top/divider/castors	97 x 38 x 60	91 x 24 x 42	336	$3,050
ETN-ENC483042S	Eaton Rack 48Ux30x42 w/doors/top/divider/castors	97 x 38 x 60	91 x 30 x 42	380	$3,640
ETN-ENC482448S	Eaton Rack 48Ux24x48 w/doors/top/divider/castors	97 x 38 x 60	91 x 24 x 48	350	$3,690
ETN-ENC483048S	Eaton Rack 48Ux30x48 w/doors/top/divider/castors	97 x 38 x 60	91 x 30 x 48	394	$4,075
ETN-ENC422442SB	Eaton Rack 42Ux24x42 w/doors/sides/top/leveler/castors	87 x 38 x 60	81 x 25.5 x 42	367	$3,145
ETN-ENC422442SC	Eaton Rack 42Ux24x 42 w/doors/sides/top (no castors)	87 x 38 x 60	81 x 24 x 42	327	$2,925
ETN-ENC423042SC	Eaton Rack 42Ux30x 42 w/doors/sides/top (no castors)	87 x 38 x 60	81 x 30 x 42	341	$3,695
ETN-ENC422442SD	Eaton Rack 42Ux24x 42 w/doors/top (no sides/divider/castors)	87 x 38 x 60	81 x 24 x 42	269	$2,350
ETN-ENC423042SD	Eaton Rack 42Ux30x 42 w/doors/top (no sides/divider/castors)	87 x 38 x 60	81 x 30 x 42	299	$2,925
ETN-ENC422442SL	Eaton Rack 42Ux24x 42 w/doors/sides/top/castors/combo lock	87 x 38 x 60	81 x 25.5 x 42	370	$3,640
ETN-ENZ422440S	Eaton Rack Seismic 42Ux24x42 w/drs/divider/lace (no castors)[1]	90 x 38 x 60	84 x 24 x 42	340	$4,400
ETN-ENZ422440SB	Eaton Rack Seismic 42Ux24x42 w/drs/sides/lace (no castors)[1]	90 x 38 x 60	84 x 24 x 42	398	$4,800
ETN-ENZ423040S	Eaton Rack Seismic 42Ux30x42 w/drs/divider/lace (no castors)[1]	90 x 38 x 60	84 x 30 x 42	381	$4,600
ETN-ENZ423040SB	Eaton Rack Seismic 42Ux30x42 w/drs/sides/lace (no castors)[1]	90 x 38 x 60	84 x 32.5 x 42	437	$5,200
ETN-VS2302440	Eaton SME Enclosure 30U 24 40 with Doors, Sides, Top, Casters	65 x 30 x 48	59 x 25 x 42	250	$2,520
ETN-VS2362440	Eaton SME Enclosure 36U 24 40 with Doors, Sides, Top, Casters	76 x 30 x 48	70 x 25 x 42	300	$2,730

Note: 1.) Seismic racks tested to NEBS Zone 4 via Telecordia GR-63-CORE specification with 1300 lbs added load weight, and 50 lbs top of cabinet cable weight
Each side panel will add approximately 3/4" to the width of the rack
Add 65 lbs to installed weights to get estimated shipping weights with pallet and packaging materials

S-SERIES CHIMNEY CABINETS AND OPTIONS

		Dimensions (H x W x D, inches)			List
Part Number	**Description**	**Shipping**	**Installed**	**Weight (lb)**	**Price**
ETN-ETC422442S	Eaton Chimney Rack 42Ux24x42 w/doors/top/divider/castors	87 x 38 x 60	81 x 30 x 42	322	$2,730
ETN-ETC422442SB	Eaton Chimney Rack 42Ux24x42 w/doors/top/sides/castors	87 x 38 x 60	81 x 25.5 x 42	320	$3,200
ETN-ETC422448S	Eaton Chimney Rack 42Ux24x48 w/doors/top/divider/castors	87 x 38 x 60	81 x 24 x 48	330	$3,465
ETN-ETC422448SB	Eaton Chimney Rack 42Ux24x48 w/doors/top/sides/castors	87 x 38 x 60	81 x 25.5 x 48	335	$4,045
ETN-ETC423042S	Eaton Chimney Rack 42Ux30x42 w/doors/top/divider/castors	87 x 38 x 60	81 x 30 x 42	325	$3,465
ETN-ETC423042SB	Eaton Chimney Rack 42Ux30x42 w/doors/top/sides/castors	87 x 38 x 60	81 x 31.5 x 42	330	$4,045
ETN-ETC423048S	Eaton Chimney Rack 42Ux30x48 w/doors/top/divider/castors	87 x 38 x 60	81 x 30 x 48	335	$3,935
ETN-ETC423048SB	Eaton Chimney Rack 42Ux30x48 w/doors/top/sides/castors	87 x 38 x 60	81 x 31.5 x 48	340	$4,515

Notes: Depth of enclosures includes front and rear doors

ETN-ENCXXXXXXS Configurations Include: Perforated Hi Flow 75% Front Door, Top Panel for Telescopic Chimney , Solid Split Rear Door, 19" EIA Square Holed Rails, Divider Panel with cable pass thru, Casters, PDU Brackets

ETN-ENCXXXXXXSB Configurations Include: Perforated Hi Flow 75% Front Door, Top Panel for Telescopic Chimney, Solid Split Rear Door, 19" EIA Square Holed Rails, (2) Solid Side Panels, Casters, PDU Brackets

EATON POWER DISTRIBUTION, MONITORING AND ENCLOSURES

S-Series Rack *(continued)*

S-SERIES CHIMNEYS, PICK ONE WITH REQUIRED HEIGHT FOR "ETN-ETC" CABINETS ABOVE

Part Number	Description	Dimensions (H x W x D, inches) Shipping	Installed	Weight (lb)	List Price
ETN-EXTTC1219	Telescopic Chimney for rack to ceiling heights of 12 to 19 in	24 x 24 x 16	H x 23 x 19.5	30	$336
ETN-EXTTC1728	Telescopic Chimney for rack to ceiling heights of 17 to 28 in	24 x 24 x 20	H x 23 x 19.5	39	$399
ETN-EXTTC2645	Telescopic Chimney for rack to ceiling heights of 26 to 45 in	24 x 24 x 30	H x 23 x 19.5	56	$462
ETN-EXTTC4376	Telescopic Chimney for rack to ceiling heights of 43 to 76 in	24 x 24 x 48	H x 23 x 19.5	87	$525

S-SERIES RACK OPTIONS

Part Number	Description	Dimensions (H x W x D, inches) Shipping	Installed	Weight (lb)	List Price
Rack Panels and Doors					
ETN-ACC4242DP	S-Series Divider Panel 42U x 42D w/Pass-Thru (Qty-1)	6 x 90 x 50	Side of rack	25	$236
ETN-ACC4248DP	S-Series Divider Panel 42U x 48D w/Pass-Thru (Qty-1)	6 x 90 x 50	Side of rack	28	$263
ETN-ACC4842DP	S-Series Divider Panel 48U x 42D w/Pass-Thru (Qty-1)	6 x 90 x 50	Side of rack	28	$263
ETN-ACC4848DP	S-Series Divider Panel 48U x 48D w/Pass-Thru (Qty-1)	6 x 90 x 50	Side of rack	30	$289
ETN-ACC4242SP	S-Series Side Panel 42U x 42D (Qty-1)	6 x 90 x 50	Add 3/4" width	45	$473
ETN-ACC4248SP	S-Series Side Panel 42U x 48D (Qty-1)	6 x 90 x 50	Add 3/4" width	49	$630
ETN-ACC4842SP	S-Series Side Panel 48U x 42D (Qty-1)	6 x 90 x 50	Add 3/4" width	50	$525
ETN-ACC4848SP	S-Series Side Panel 48U x 48D (Qty-1)	6 x 90 x 50	Add 3/4" width	56	$500
ETN-ACC2442TP	S-Series Top Panel 24W x 42D	5 x 32 x 51	No height added	21	$272
ETN-ACC2448TP	S-Series Top Panel 24W x 48D	5 x 32 x 51	No height added	25	$310
ETN-ACC3042TP	S-Series Top Panel 30W x 42D	5 x 32 x 51	No height added	23	$290
ETN-ACC3048TP	S-Series Top Panel 30W x 48D	5 x 32 x 51	No height added	28	$334
ETN-ACC4224FD	S-Series Front Door 42U x 24W	6 x 90 x 50	Add 1" depth	49	$357
ETN-ACC4224RD	S-Series Rear Door Split 42U x 24W	6 x 90 x 50	Add 1" depth	54	$647
ETN-ACC4230FD	S-Series Front Door 42U x 30W	6 x 90 x 50	Add 1" depth	55	$382
ETN-ACC4230RD	S-Series Rear Door Split 42U x 30W	6 x 90 x 50	Add 1" depth	62	$660
ETN-ACC4824FD	S-Series Front Door 48U x 24W	6 x 90 x 50	Add 1" depth	55	$387
ETN-ACC4824RD	S-Series Rear Door Split 48U x 24W	6 x 90 x 50	Add 1" depth	62	$680
ETN-ACC4830FD	S-Series Front Door 48U x 30W	6 x 90 x 50	Add 1" depth	60	$413
ETN-ACC4830RD	S-Series Rear Door Split 48U x 30W	6 x 90 x 50	Add 1" depth	65	$745
ETN-ACC4224RL	S-Series Rails 42U x 24W	8 x 88 x 5	Internal	22	$344
ETN-ACC4230RL	S-Series Reducer Rails 42U x 30W	4 x 88 x 8	Internal	42	$455
ETN-ACC4824RL	S-Series Rails 48U x 24W	8 x 88 x 5	Internal	26	$375
ETN-ACC4830RL	S-Series Reducer Rails 48U x 30W	4 x 88 x 8	Internal	45	$495
ETN-ACC42VBP	S-Series Vertical Blanking Panels 42U x 30W	5 x 9 x 49	Internal	9	$174
ETN-ACC48VBP	S-Series Vertical Blanking Panels 48U x 30W	5 x 9 x 49	Internal	10	$188
Rack and Raised Floor Air Management					
ETN-PBP1U10	Eaton Blanking Panel 19" Tool-less Plastic 1U (Qty-10)	5 x 5 x 20	1U x 19	4	$75
ETN-PBP1U100	Eaton Blanking Panel 19" Tool-less Plastic 1U (Qty-100)	25 x 10 x 20	1U x 19	40	$475
ETN-PBP2U10	Eaton Blanking Panel 19" Tool-less Plastic 2U (Qty-10)	5 x 9 x 20	2U x 19	7	$90
ETN-PBP2U100	Eaton Blanking Panel 19" Tool-less Plastic 2U (Qty-100)	25 x 18 x 20	2U x 19	70	$525
ETN-PBP8U10	Eaton Blanking Panel 19" Tool-less Plastic 8U (Qty-10)	20 x 11 x 15	8U x 19	15	$250
ETN-PBP8U100	Eaton Blanking Panel 19" Tool-less Plastic 8U (Qty-100)	21 x 50 x 30	8U x 19	150	$1,900
ETN-JFT12440	Top fan tray kit (4 fans) for S-Series 24" x 42", 120VAC	5 x 32 x 51	Top of rack	45	$331
ETN-JFT12445	Top fan tray kit (4 fans) for S-Series 24" x 48", 120VAC	5 x 32 x 51	Top of rack	48	$368
ETN-JFT13040	Top fan tray kit (4 fans) for S-Series 30" x 42", 120VAC	5 x 32 x 51	Top of rack	50	$352
ETN-JFT13045	Top fan tray kit (4 fans) for S-Series 30" x 48", 120VAC	5 x 32 x 51	Top of rack	54	$384
ETN-FLRGR118	Eaton Floor Grommet, 11"W x 8.25"D (Qty-1)	2 x 12 x 17	1 x 11 x 8.25	5	$100
ETN-FLRGR11810	Eaton Floor Grommet, 11"W x 8.25"D (Qty-10)	20 x 12 x 17	1 x 11 x 8.25	50	$945
ETN-FLRGR76	Eaton Floor Grommet, 7.5"W x 6.5"D (Qty-1)	2 x 8 x 11	1 x 7.5 x 6.5	4	$90
ETN-FLRGR7610	Eaton Floor Grommet, 7.5"W x 6.5"D (Qty-10)	20 x 8 x 11	1 x 7.5 x 6.5	40	$840
Network Switch Air Deflectors for Front to Rear Air Flow					
ETN-6509CVK42	Cisco 6509 Conversion Kit for S-Series Racks 42U x 30" W	6 x 90 x 50	Internal	90	$955
ETN-6509CVK48	Cisco 6509 Conversion Kit for S-Series Racks 48U x 30" W	6 x 90 x 50	Internal	110	$995
ETN-6513CVK42	Cisco 6513 Conversion Kit for S-Series Racks 42U x 30" W	6 x 90 x 50	Internal	90	$955
ETN-6513CVK48	Cisco 6513 Conversion Kit for S-Series Racks 48U x 30" W	6 x 90 x 50	Internal	115	$995

EATON POWER DISTRIBUTION, MONITORING AND ENCLOSURES

S-Series Rack *(continued)*

S-SERIES RACK OPTIONS *(continued)*

Part Number	Description	Dimensions (H x W x D, inches) Shipping	Installed	Weight (lb)	List Price
Rack Shelves					
ETN-FS19201U20	Eaton Shelf Fixed 19" 1U x 20"D 200lbs	3 x 22 x 33	1U x 20	15	$137
ETN-FS19201U40	Eaton Shelf Fixed 19" 1U x 20"D 400lbs	3 x 22 x 33	1U x 20	17	$152
ETN-FS19241U20	Eaton Shelf Fixed 19" 1U x 24"D 200lbs	3 x 22 x 33	1U x 24	16	$142
ETN-FS19241U40	Eaton Shelf Fixed 19" 1U x 24"D 400lbs	3 x 22 x 33	1U x 24	18	$163
ETN-FS19281U20	Eaton Shelf Fixed 19" 1U x 28"D 200lbs	3 x 22 x 33	1U x 28	17	$147
ETN-FS19281U40	Eaton Shelf Fixed 19" 1U x 28"D 400lbs	3 x 22 x 33	1U x 28	19	$168
ETN-RS19241U10	Eaton Shelf Roll-Out 19" 1U x 24"D 100lbs	3 x 22 x 33	1U x 24	18	$415
ETN-RS19242U20	Eaton Shelf Roll-Out 19" 2U x 24"D 200lbs	3 x 22 x 33	1U x 24	20	$446
ETN-RS19281U10	Eaton Shelf Roll-Out 19" 1U x 28"D 100lbs	3 x 22 x 33	1U x 28	21	$425
ETN-RS19282U20	Eaton Shelf Roll-Out 19" 2U x 28"D 200lbs	3 x 22 x 33	1U x 28	23	$455
ETN-CHASBKT2032	Eaton Chassis Support Brackets Adj 19" (20"-32") 400 lbs.	6 x 6 x 30	2U x 19	14	$325
EAUS192U1605	Eaton 19" Utility Shelf, 2 post mounting, 50 lbs	12 x 24 x 9	2U x 30	12	$131
Rack Cable and PDU Management, hardware					
ETN-LACEB42U03	Eaton S-Series Lacing Bar 42U x 3"W	4 x 3 x 88	42U x 3	7	$69
ETN-LACEB42U08	Eaton S-Series Lacing Bar 42U x 8"W	5 x 15 x 88	42U x 8	12	$90
ETN-LACEB42U12	Eaton S-Series Lacing Bar 42U x 12"W	5 x 15 x 88	42U x 12	15	$110
ETN-LACEB48U03	Eaton S-Series Lacing Bar 48U x 3"W	4 x 3 x 88	48U x 3	8	$79
ETN-LACEB48U08	Eaton S-Series Lacing Bar 48U x 8"W	5 x 15 x 88	48U x 8	14	$100
ETN-LACEB48U12	Eaton S-Series Lacing Bar 48U x 12"W	5 x 15 x 88	48U x 12	17	$126
ETN-PWRBAR42U	Eaton S-Series Power Mounting Bar 42U x 9"W	5 x 15 x 88	42U x 9	15	$131
ETN-PWRBAR48U	Eaton S-Series Power Mounting Bar 48U x 9"W	5 x 15 x 88	48U x 9	17	$136
ETN-PDUBRCKTW	Eaton S-Series PDU Mounting Brackets	4 x 9 x 6	4.5 x 7.1 x 1	3	$47
ETN-CMDRNR031U	Eaton Cable D-Ring Kit 1U (Qty-4)	6 x 4 x 9	1U x .75 x 3.3	3	$30
ETN-CMDRNR032U	Eaton Cable D-Ring Kit 2U (Qty-4)	6 x 4 x 9	2U x .75 x 3.3	4	$32
ETN-STLDRING	Eaton Cable D-Ring Kit, Plastic, (Qty-4)	6 x 4 x 9	1U x .75 x 3.3	3	$100
ETN-CMTUNR02	Eaton Fiber Spool 2.5"H	6 x 9 x 4	4 x 2.75 x 3.8	2	$58
ETN-CMTUNR05	Eaton Fiber Spool 5"H	6 x 9 x 4	4 x 5 x 3.8	3	$63
ETN-BX45V8	Eaton Velcro Strap 8"L, (Qty-50)	5 x 5 x 10	Internal	2	$63
ETN-BX45V11	Eaton Velcro Strap 11"L, (Qty-50)	5 x 5 x 10	Internal	2	$74
ETN-CMVBCKL	Eaton Velcro Buckle Strap 9"L, (Qty-10)	6 x 9 x 4	Internal	1	$85
ETN-CMVBCKL12	Eaton Velcro Buckle Strap 12"L, (Qty-10)	6 x 9 x 4	Internal	1	$88
ETN-CMRB19022U	Eaton Cable Strain Relief Bar 2"D	3 x 21 x 8	3.5 x 19 x 3	3	$79
ETN-CMRB19042U	Eaton Cable Strain Relief Bar 4"D	3 x 21 x 8	3.5 x 19 x 5	4	$82
ETN-CMRB19062U	Eaton Cable Strain Relief Bar 6"D	3 x 21 x 8	3.5 x 19 x 7	5	$86
ETN-CMRB19082U	Eaton Cable Strain Relief Bar 8"D	3 x 21 x 8	3.5 x 19 x 9	6	$89
ETN-CMPD19031U	Eaton Horizontal Ring Manager 1U	3 x 21 x 8	1U x 19 x 4.2	4	$48
ETN-CMPD19032U	Eaton Horizontal Ring Manager 2U	3 x 21 x 8	2U x 19 x 4.2	4	$50
ETN-CMBPBRSH1U	Eaton Cable Pass-Thru Panel 1U w/Brush	6 x 9 x 4	1U x 19 x .5	1	$78
ETN-CMBPBRSH2U	Eaton Cable Pass-Thru Panel 2U w/Brush	6 x 9 x 4	2U x 19 x .5	2	$55
ETN-CMFD19041U	Eaton PatchLink Horizontal Cable Manager 1U	2 x 4 x 22	1U x 19 x 4	2	$128
ETN-CMFD19042U	Eaton PatchLink Horizontal Cable Manager 2U	4 x 4 x 22	2U x 19 x 4	2	$149
ETN-CMFP19032U	Eaton Upper Transition Tray 2U x 3.5"D	9 x 9 x 28	2U x 19 x 4	5	$110
ETN-CMFP19052U	Eaton Upper Transition Tray 2U x 5.0"D	9 x 9 x 28	2U x 19 x 6	6	$115
ETN-CMLT19032U	Eaton Lower Transition Tray 2U x 3.5"D	9 x 9 x 28	2U x 19 x 5	5	$142
ETN-CMLT19052U	Eaton Lower Transition Tray 2U x 5.0"D	9 x 9 x 28	2U x 19 x 6	6	$147
ETN-CMHD19242U	High Density Cable Organizer, w/rear transition tray 24" cabinet	9 x 9 x 28	2U x 19 x 24	5	$445
ETN-CMHD19302U	High Density Cable Organizer, w/rear transition tray 30" cabinet	9 x 9 x 28	2U x 19 x 30	7	$468
ETN-1032CAGE20	Eaton Cage Nut #10-32 Hardware Kit (Qty-20)	5 x 5 x 5	Internal	2	$20
ETN-M6CAGE20	Eaton Cage Nut M6 Hardware Kit (Qty-20)	5 x 5 x 5	Internal	2	$20
Top of Rack Cable Management					
ETN-LAD1006B	Eaton S-Series Cable Ladder Rack 6"W x 10'L BLK	2 x 7 x 122	1.5 x 6 x 120	12	$237
ETN-LAD1012B	Eaton S-Series Cable Ladder Rack 12"W x 10'L BLK	2 x 13 x 122	1.5 x 12 x 120	24	$263
ETN-JCMTLDRPD	Eaton S-Series Ladder Rack Bracket Perpendicular	6 x 10 x 5	Internal	5	$100

EATON POWER DISTRIBUTION, MONITORING AND ENCLOSURES

S-Series Rack *(continued)*

S-SERIES RACK OPTIONS *(continued)*

Part Number	Description	Dimensions (H x W x D, inches) Shipping	Installed	List Weight (lb)	Price
Top of Rack Cable Management (continued)					
ETN-JCMTLDRPR	Eaton S-Series Ladder Rack Bracket Parallel	6 x 10 x 5	Internal	5	$79
ETN-JCMT24SP	Eaton S-Series Data Cable Partition Panel 24" Solid	6 x 6 x 48	5 x 24 x 2.5	3	$79
ETN-JCMT24PP	Eaton S-Series Data Cable Partition Panel 24" Pass-Thru	6 x 6 x 48	5 x 24 x 2.5	3	$84
ETN-JCMT24PT	Eaton S-Series Power Cable Trough 24"	3 x 33 x 16	5 x 24 x 10	7	$158
ETN-JCMT30SP	Eaton S-Series Data Cable Partition Panel 30" Solid	6 x 6 x 48	5 x 30 x 2.5	4	$84
ETN-JCMT30PP	Eaton S-Series Data Cable Partition Panel 30" Pass-Thru	6 x 6 x 48	5 x 30 x 2.5	4	$89
ETN-JCMT30PT	Eaton S-Series Power Cable Trough 30"	6 x 6 x 48	5 x 30 x 10	8	$179
Rack shipping and anchoring					
ETN-JANCHOR1	Eaton S-Series Floor Anchor Brackets (S-Series)	6 x 10 x 5	2.8 x 7 x 2.8	11	$189
ETN-ENCRMP30	Eaton Standard-Duty Ramp for 30"W Racks (S-Series)	1 x 38 x 44	1 x 38 x 44	22	$55
ETN-ACCJCSTR40	S Series Caster Kit - Qty 4 - for 42" Deep cabinet	10 x 10 x 40	4 x 31 x 6	40	$236
ETN-ACCJCSTR45	S Series Caster Kit - Qty 4 - for 48" Deep cabinet	10 x 10 x 40	4 x 36 x 6	45	$265

Note: Call factory for heavy duty packaging options

EATON POWER DISTRIBUTION, MONITORING AND ENCLOSURES

Eaton B-Line 2 & 4 Post Racks and Accessories



Maintain your critical applications with the first part of Eaton's Power Solution.
Available in three configurations to meet a variety of application requirements: three-inch upright, six-inch upright and Seismic Rack

- Simple, durable design holds up to repeated relocation
- Full range of accessories simplify cable management
- Flat black powder coat finish complements any data center

TWO POST RACKS

Part Number	Description	Height (in./mm)	Width (in./mm)	Mounting width (in./mm)	Inside width (in./mm)	Base anchor spacing (in./mm)	Shipping Weight (lbs)	List Price
SB556084XUFB	Two Post Rack with three-inch uprights (unassembled)	84 / 2133	20.3 / 516	18.3 / 465	17.8 / 451	16 / 406	30	$205
SB55608419U6FB	Two Post Rack with six-inch uprights (unassembled)	84 / 2133	20.3 / 516	18.8 / 465	17.8 / 451	16 / 406	30	$485
SB588A	Anchor Kit (Four anchors and hardware)							$33

TWO POST SEISMIC RACK

Part Number	Description	Height (in./mm)	Width (in./mm)	Mounting spaces (in./mm)	Shipping Weight (lbs)	List Price
SB85219084FB	Two Post Seismic Relay Rack	84 / 2133	20.3 / 516	18.3 / 465	30	$1,383

FOUR POST RACK

Part Number	Description	Height (in.)	Width (in.)	Depth (in.)	Shipping Weight (lbs)	List Price
SB838084CFB	Four-post adjustable rack (45U)	84	19	30-36	59.5	$910

WALL MOUNT CABINETS

Part Number	Description	Height (in.)	Width (in.)	Depth (in.)	Max. usable depth (in.)	Swing out body depth (in.)	Shipping Weight (lbs)	List Price
VLWM2425PB	Dual hinge wall-mount cabinet (12U)– Plexiglas door	24.1	24.7	25	23.5	19	69	$1,112
VLWM2425SB	Dual hinge wall-mount cabinet (12U)– solid door	24.1	24.7	25	23.5	19	70	$1,077
SB708193025FB	Wall-mounted swing gate rack (13U)	29.2	19	25	25	19.9	39	$512

CABLE MANAGEMENT

Part Number	Description	Fits rack (U)	Height (in.)	Depth (in.)	Shipping Weight (lbs)	List Price
Cable managers						
SB86083S084FB	Single-sided cable manager for Two Post Rack	84	80.38	3.13	24.2	$650
SB86083D084FB	Double-sided cable manager for Two Post Rack	84	80.38	3.13	45.3	$863
Finger bracket						
SB860FSFB	Cable manager finger bracket		11U	4	0.9	$32
SB860FSKFB	Replacement finger section, 11U, includes hardware				0.6	$24

EATON POWER DISTRIBUTION, MONITORING AND ENCLOSURES

Eaton B-Line 2 & 4 Post Racks and Accessories *(continued)*

CABLE MANAGEMENT *(continued)*

Part Number	Description	Fits rack (U)	Height (in.)	Depth (in.)	Shipping Weight (lbs)	List Price
Cable Trays						
SB81319TT6FB	Top transition tray, 1 ½ inch high		6	19	4	$180
SB81319UT6FB	Upper transition tray		6	19	4	$180
Horizontal rackmount cable managers						
SB87019S1FB	1U horizontal cable manager		19	1U	2.1	$80
SB87019S2FB	2U horizontal cable manager		19	2U	2.5	$82
SB87019S3FB	3U horizontal cable manager		19	3U	2.8	$121

Part Number	Description	Height (in.)	Depth (in.)	Width (in.)	Shipping Weight (lbs)	List Price
Vertical cable managers						
SB57163S084FB	Single-sided 84-inch cabling section	84	6.4	3.6	8	$503
SB57163D084FB	Double-sided 84-inch cabling section	84	12.8	3.6	24	$559
SB571GROMMETKIT	Grommet kit					$27
SB571BUSHINGKIT	Bushing kit					$25

ACCESSORIES

Part Number	Description	Height (in.)	Depth (in.)	Shipping Weight (lbs)	List Price
ePDU brackets					
SB3010	Fixed ePDU support bracket	4.82	1.75	1	$37
SB3011	Adjustable ePDU support bracket	3.5	1.13	1	$112
Double shelf					
SB596S19103SFB	Steel double-sided shelf for three-inch uprights	4	20	14	$148
SB596S19106SFB	Steel double-sided shelf for six-inch uprights	4	20	14	$149
Single solid shelf					
SB747S1915SFB	Steel, 15-inch deep single vented shelf	3	15	11	$101
Single vented shelf					
SB747V1915SFB	Steel, 15-inch deep, single vented shelf	3	15	9.2	$109

EATON POWER DISTRIBUTION, MONITORING AND ENCLOSURES
Environmental Rack Monitor (ERM)

- Connect and monitor up to two temperature sensors, two humidity sensors and four input contact sensors
- 0U form factor space saving design; does not take valuable space that can be occupied by servers
- Built-in Web server—access, monitor, configure and even reboot the device from anywhere on the Internet using its own dedicated IP address
- Supports SNMP and comes with its own MIB (Management Information Base). Can integrate with any open-standards based Network Management System (NMS) such as HP OpenView
- One-year warranty on rack monitor and all sensors



ENVIRONMENTAL RACK MONITORS

Description	Part Number	Shipping Dimensions (H x W x D, inches)	Shipping Weight (lb)	List Price
Environmental Rack Monitor, 120V AC 2-pin power input[1]	103005775	2.5 x 7.6 x 11.9	1.7	$399
Environmental Rack Monitor, C13/C14, 100-250V AC, 50/60Hz 3-pin power input	103005912	2.5 x 7.6 x 11.9	2.2	$399
TH-Module (Black), individual	103005822	2.4 x 6.3 x 8.8	0.7	$89
Environmental Rack Monitor Water Leak Detector, 3ft	103005780	0.6 x 7.9 x 8.2	0.3	$139
Environmental Rack Monitor Water Leak Detector, 12ft	103005894	0.6 x 11.2 x 11.4	0.5	$249
Environmental Rack Monitor Door Contact Sensor	103005781	2.0 x 2.0 x 2.0	0.1	$29
Environmental Rack Monitor Vibration Sensor	103005782	2.0 x 3.0 x 2.0	0.1	$35
Environmental Rack Monitor Power Supply, 120V AC	103005783	2.1 x 2.8 x 4.1	0.2	$22
Environmental Rack Monitor Power Supply, C13/C14 adapter cable, 100-250V AC, 50/60Hz	103005895	2.1 x 2.8 x 4.1	0.2	$39
Environmental Rack Monitor Smoke Detector/Alarm (220V, IEC C-13)	103005779	2.4 x 6.3 x 8.8	2.2	$139
Environmental Rack Monitor Smoke Detector/Alarm (110V, 5-15)	103005890	2.4 x 6.3 x 8.8	2.2	$139

1. Includes one TH-module

EATON POWER DISTRIBUTION, MONITORING AND ENCLOSURES

Eaton Remote Power Panel Part Number Illustration

Eaton is now employing the use of smart part numbers to help our customers understand the product that fits their needs. Follow the example below as reference only. For ordering purposes please select one of the pre-configured part numbers in the price book or use the online configurator available through the Power Quality web site.

B1 4 1 A CC 0 3 2 0 3 001

Series

B1 = Small RPP (24"W x 24"D)
B2 = Rack RPP (24"W x 42"D)

Input Connection

1 = Direct Connect
2-3 = Single Input
4-5 = Dual Input

Panel Main Breaker

1 = Standard kAIC
2 = High kAIC

Panel Type

A = 208V 225A Bolt-on CH
B = 208V 400A Bolt-on CH
C = 208V 225A Plug-on CH
D = 208V 400A Plug-on CH
E = 208V 225A Bolt-on SQD
F = 208V 400A Bolt-on SQD

Front/Rear Configuration

0 = None
A = Top Only (1 Panel)
B = Bottom Only (1 Panel)
C = Top & Bottom (2 Panels)

Surge

0 = None
2 = 100kA/ph
3 = 200kA/ph

Metering

0 = None
1 = System Level
2 = Premium BCMS 60A
3 = Premium BCMS 100A

Display

0 = None
1 = Single Display
2 = Dual Display

Door

0 = Solid
1 = See-Thru Plexi
2 = Rack Mesh

Communication

0 = None
2 = Modbus RTU
3 = PXGXPDP
4 = Modbus RTU & PXGXPDP

Generation

001 = Gen 1

EATON POWER DISTRIBUTION, MONITORING AND ENCLOSURES

Remote Power Panel (RPP)

Eaton RPPs deliver unmatched power distribution with up to 168 factory-installed branch breakers in a highly compact footprint. These products offer ease of installation through standard top and bottom cable entry provisions within a free-standing structure. They include extensive monitoring options such as branch circuit monitoring, which allows you to manage and monitor power effectively.

- Unmatched power distribution in either a highly compact footprint or rack configuration to line and match with IT equipment racks
- Ease of installation through standard top and bottom cable entry provision
- Extensive monitoring options allow you to manage power effectively
- Factory-tested power distribution to ensure highest reliability
- Flexible expansion for your power distribution within a data center



Rack Power Panel
24"W x 42"D x 80"H



Remote Power Panel
24"W x 24"D x 80"H

REMOTE POWER PANEL TOPSELLERS (24"W x 24"D x 80"H)

Part Number	Description	Local Display	Surge Protection	Door Style	List Price
Direct Connection to Panel Main Breakers					
System Level Monitoring (Includes Power Xpert Gateway PDP Card)					
B111AC010113001	Front Only - 2 x 42-pole Panels - 208/120V 225A Bolt-on Cutler-Hammer	Front	None	See-Through Plexi	$10,170
B111AC012113001	Front Only - 2 x 42-pole Panels - 208/120V 225A Bolt-on Cutler-Hammer	Front	100 kA/ph per Input	See-Through Plexi	$12,220
B111BC010103001	Front Only - 2 x 42-pole Panels - 208/120V 400A Bolt-on Cutler-Hammer	Front	None	Solid Standard	$11,145
B111ACC10213001	Front & Back - 4 x 42-pole Panels - 208/120V 225A Bolt-on Cutler-Hammer	Front & Back	None	See-Through Plexi	$16,790
B111ACC12213001	Front & Back - 4 x 42-pole Panels - 208/120V 225A Bolt-on Cutler-Hammer	Front & Back	100 kA/ph per Input	See-Through Plexi	$20,890
B111BCC10203001	Front & Back - 4 x 42-pole Panels - 208/120V 400A Bolt-on Cutler-Hammer	Front & Back	None	Solid Standard	$19,015
Premium Level Monitoring with BCMS (60A max) (Includes Power Xpert Gateway PDP Card)					
B111AC020113001	Front Only - 2 x 42-pole Panels - 208/120V 225A Bolt-on Cutler-Hammer	Front	None	See-Through Plexi	$13,270
B111AC022113001	Front Only - 2 x 42-pole Panels - 208/120V 225A Bolt-on Cutler-Hammer	Front	100 kA/ph per Input	See-Through Plexi	$15,320
B111BC020103001	Front Only - 2 x 42-pole Panels - 208/120V 400A Bolt-on Cutler-Hammer	Front	None	Solid Standard	$14,245
B111ACC20213001	Front & Back - 4 x 42-pole Panels - 208/120V 225A Bolt-on Cutler-Hammer	Front & Back	None	See-Through Plexi	$20,790
B111ACC22213001	Front & Back - 4 x 42-pole Panels - 208/120V 225A Bolt-on Cutler-Hammer	Front & Back	100 kA/ph per Input	See-Through Plexi	$24,890
B111BCC20203001	Front & Back - 4 x 42-pole Panels - 208/120V 400A Bolt-on Cutler-Hammer	Front & Back	None	Solid Standard	$23,015
Premium Level Monitoring with BCMS (100A max) (Includes Power Xpert Gateway PDP Card)					
B111AC030113001	Front Only - 2 x 42-pole Panels - 208/120V 225A Bolt-on Cutler-Hammer	Front	None	See-Through Plexi	$13,720
B111AC032113001	Front Only - 2 x 42-pole Panels - 208/120V 225A Bolt-on Cutler-Hammer	Front	100 kA/ph per Input	See-Through Plexi	$15,770
B111BC030103001	Front Only - 2 x 42-pole Panels - 208/120V 400A Bolt-on Cutler-Hammer	Front	None	Solid Standard	$14,695
B111ACC30213001	Front & Back - 4 x 42-pole Panels - 208/120V 225A Bolt-on Cutler-Hammer	Front & Back	None	See-Through Plexi	$21,790
B111ACC32213001	Front & Back - 4 x 42-pole Panels - 208/120V 225A Bolt-on Cutler-Hammer	Front & Back	100 kA/ph per Input	See-Through Plexi	$25,890
B111BCC30203001	Front & Back - 4 x 42-pole Panels - 208/120V 400A Bolt-on Cutler-Hammer	Front & Back	None	Solid Standard	$24,015
Single Input Main Lug					
System Level Monitoring (Includes Power Xpert Gateway PDP Card)					
B121AC010113001	Front Only - 2 x 42-pole Panels - 208/120V 225A Bolt-on Cutler-Hammer	Front	None	See-Through Plexi	$10,805
B131ACC10113001	Front & Back - 4 x 42-pole Panels - 208/120V 225A Bolt-on Cutler-Hammer	Front	None	See-Through Plexi	$13,690
B131BAA10103001	Front & Back - 2 x 42-pole Panels - 208/120V 400A Bolt-on Cutler-Hammer	Front	None	Solid Standard	$12,915
Premium Level Monitoring with BCMS (60A max) (Includes Power Xpert Gateway PDP Card)					
B121AC020113001	Front Only - 2 x 42-pole Panels - 208/120V 225A Bolt-on Cutler-Hammer	Front	None	See-Through Plexi	$13,905
B131ACC20113001	Front & Back - 4 x 42-pole Panels - 208/120V 225A Bolt-on Cutler-Hammer	Front	None	See-Through Plexi	$19,890
B131BAA20103001	Front & Back - 2 x 42-pole Panels - 208/120V 400A Bolt-on Cutler-Hammer	Front	None	Solid Standard	$16,015

EATON POWER DISTRIBUTION, MONITORING AND ENCLOSURES

Remote Power Panel (RPP) *(continued)*

REMOTE POWER PANEL TOPSELLERS (24"W x 24"D x 80"H) *(continued)*

Part Number	Description	Local Display	Surge Protection	Door Style	List Price
Single Input Main Lug (continued)					
Premium Level Monitoring with BCMS (100A max) (Includes Power Xpert Gateway PDP Card)					
B121AC030113001	Front Only - 2 x 42-pole Panels - 208/120V 225A Bolt-on Cutler-Hammer	Front	None	See-Through Plexi	$14,355
B131ACC30113001	Front & Back - 4 x 42-pole Panels - 208/120V 225A Bolt-on Cutler-Hammer	Front	None	See-Through Plexi	$20,890
B131BAA30103001	Front & Back - 2 x 42-pole Panels - 208/120V 400A Bolt-on Cutler-Hammer	Front	None	Solid Standard	$16,465
Dual Input Main Lugs					
System Level Monitoring (Includes Power Xpert Gateway PDP Card)					
B141ACC10213001	Front & Back - 4 x 42-pole Panels - 208/120V 225A Bolt-on Cutler-Hammer	Front & Back	None	See-Through Plexi	$17,860
B141BAA10203001	Front & Back - 2 x 42-pole Panels - 208/120V 400A Bolt-on Cutler-Hammer	Front & Back	None	Solid Standard	$17,085
Premium Level Monitoring with BCMS (60A max) (Includes Power Xpert Gateway PDP Card)					
B141ACC20213001	Front & Back - 4 x 42-pole Panels - 208/120V 225A Bolt-on Cutler-Hammer	Front & Back	None	See-Through Plexi	$21,860
B141BAA20203001	Front & Back - 2 x 42-pole Panels - 208/120V 400A Bolt-on Cutler-Hammer	Front & Back	None	Solid Standard	$17,985
Premium Level Monitoring with BCMS (100A max) (Includes Power Xpert Gateway PDP Card)					
B141ACC30213001	Front & Back - 4 x 42-pole Panels - 208/120V 225A Bolt-on Cutler-Hammer	Front & Back	None	See-Through Plexi	$22,860
B141BAA30203001	Front & Back - 2 x 42-pole Panels - 208/120V 400A Bolt-on Cutler-Hammer	Front & Back	None	Solid Standard	$18,435

RACK POWER PANEL TOPSELLERS (24"W x 42"D x 80"H)

Part Number	Description	Local Display	Surge Protection	Door Style	List Price
Direct Connection to Panel Main Breakers					
System Level Monitoring (Includes Power Xpert Gateway PDP Card)					
B211AC010113001	Front Only - 2 x 42-pole Panels - 208/120V 225A Bolt-on Cutler-Hammer	Front	None	See-Through Plexi	$12,595
B211AC012113001	Front Only - 2 x 42-pole Panels - 208/120V 225A Bolt-on Cutler-Hammer	Front	100 kA/ph per Input	See-Through Plexi	$14,645
B211BC010103001	Front Only - 2 x 42-pole Panels - 208/120V 400A Bolt-on Cutler-Hammer	Front	None	Solid Standard	$13,445
B211ACC10213001	Front & Back - 4 x 42-pole Panels - 208/120V 225A Bolt-on Cutler-Hammer	Front & Back	None	See-Through Plexi	$19,215
B211ACC12213001	Front & Back - 4 x 42-pole Panels - 208/120V 225A Bolt-on Cutler-Hammer	Front & Back	100 kA/ph per Input	See-Through Plexi	$23,315
B211BCC10203001	Front & Back - 4 x 42-pole Panels - 208/120V 400A Bolt-on Cutler-Hammer	Front & Back	None	Solid Standard	$21,315
Premium Level Monitoring with BCMS (60A max) (Includes Power Xpert Gateway PDP Card)					
B211AC020113001	Front Only - 2 x 42-pole Panels - 208/120V 225A Bolt-on Cutler-Hammer	Front	None	See-Through Plexi	$15,695
B211AC022113001	Front Only - 2 x 42-pole Panels - 208/120V 225A Bolt-on Cutler-Hammer	Front	100 kA/ph per Input	See-Through Plexi	$17,745
B211BC020103001	Front Only - 2 x 42-pole Panels - 208/120V 400A Bolt-on Cutler-Hammer	Front	None	Solid Standard	$16,545
B211ACC20213001	Front & Back - 4 x 42-pole Panels - 208/120V 225A Bolt-on Cutler-Hammer	Front & Back	None	See-Through Plexi	$23,215
B211ACC22213001	Front & Back - 4 x 42-pole Panels - 208/120V 225A Bolt-on Cutler-Hammer	Front & Back	100 kA/ph per Input	See-Through Plexi	$27,315
B211BCC20203001	Front & Back - 4 x 42-pole Panels - 208/120V 400A Bolt-on Cutler-Hammer	Front & Back	None	Solid Standard	$25,315
Premium Level Monitoring with BCMS (100A max) (Includes Power Xpert Gateway PDP Card)					
B211AC030113001	Front Only - 2 x 42-pole Panels - 208/120V 225A Bolt-on Cutler-Hammer	Front	None	See-Through Plexi	$16,145
B211AC032113001	Front Only - 2 x 42-pole Panels - 208/120V 225A Bolt-on Cutler-Hammer	Front	100 kA/ph per Input	See-Through Plexi	$18,195
B211BC030103001	Front Only - 2 x 42-pole Panels - 208/120V 400A Bolt-on Cutler-Hammer	Front	None	Solid Standard	$16,995
B211ACC30213001	Front & Back - 4 x 42-pole Panels - 208/120V 225A Bolt-on Cutler-Hammer	Front & Back	None	See-Through Plexi	$24,115
B211ACC32213001	Front & Back - 4 x 42-pole Panels - 208/120V 225A Bolt-on Cutler-Hammer	Front & Back	100 kA/ph per Input	See-Through Plexi	$28,215
B211BCC30203001	Front & Back - 4 x 42-pole Panels - 208/120V 400A Bolt-on Cutler-Hammer	Front & Back	None	Solid Standard	$26,215
Single Input Main Lug					
System Level Monitoring (Includes Power Xpert Gateway PDP Card)					
B221AC010113001	Front Only - 2 x 42-pole Panels - 208/120V 225A Bolt-on Cutler-Hammer	Front	None	See-Through Plexi	$13,230
B231ACC10113001	Front & Back - 4 x 42-pole Panels - 208/120V 225A Bolt-on Cutler-Hammer	Front	None	See-Through Plexi	$16,115
B231BAA10103001	Front & Back - 2 x 42-pole Panels - 208/120V 400A Bolt-on Cutler-Hammer	Front	None	Solid Standard	$15,215

EATON POWER DISTRIBUTION, MONITORING AND ENCLOSURES

Remote Power Panel (RPP) *(continued)*

RACK POWER PANEL TOPSELLERS (24"W x 42"D x 80"H) *(continued)*

Part Number	Description	Local Display	Surge Protection	Door Style	List Price
Single Input Main Lug (continued)					
Premium Level Monitoring with BCMS (60A max) (Includes Power Xpert Gateway PDP Card)					
B221AC020113001	Front Only - 2 x 42-pole Panels - 208/120V 225A Bolt-on Cutler-Hammer	Front	None	See-Through Plexi	$16,330
B231ACC20113001	Front & Back - 4 x 42-pole Panels - 208/120V 225A Bolt-on Cutler-Hammer	Front	None	See-Through Plexi	$22,315
B231BAA20103001	Front & Back - 2 x 42-pole Panels - 208/120V 400A Bolt-on Cutler-Hammer	Front	None	Solid Standard	$18,315
Premium Level Monitoring with BCMS (100A max) (Includes Power Xpert Gateway PDP Card)					
B221AC030113001	Front Only - 2 x 42-pole Panels - 208/120V 225A Bolt-on Cutler-Hammer	Front	None	See-Through Plexi	$16,780
B231ACC30113001	Front & Back - 4 x 42-pole Panels - 208/120V 225A Bolt-on Cutler-Hammer	Front	None	See-Through Plexi	$23,215
B231BAA30103001	Front & Back - 2 x 42-pole Panels - 208/120V 400A Bolt-on Cutler-Hammer	Front	None	Solid Standard	$18,765
Dual Input Main Lugs					
System Level Monitoring (Includes Power Xpert Gateway PDP Card)					
B241ACC10213001	Front & Back - 4 x 42-pole Panels - 208/120V 225A Bolt-on Cutler-Hammer	Front & Back	None	See-Through Plexi	$20,285
B241BAA10203001	Front & Back - 2 x 42-pole Panels - 208/120V 400A Bolt-on Cutler-Hammer	Front & Back	None	Solid Standard	$19,385
Premium Level Monitoring with BCMS (60A max) (Includes Power Xpert Gateway PDP Card)					
B241ACC20213001	Front & Back - 4 x 42-pole Panels - 208/120V 225A Bolt-on Cutler-Hammer	Front & Back	None	See-Through Plexi	$24,285
B241BAA20203001	Front & Back - 2 x 42-pole Panels - 208/120V 400A Bolt-on Cutler-Hammer	Front & Back	None	Solid Standard	$20,285
Premium Level Monitoring with BCMS (100A max) (Includes Power Xpert Gateway PDP Card)					
B241ACC30213001	Front & Back - 4 x 42-pole Panels - 208/120V 225A Bolt-on Cutler-Hammer	Front & Back	None	See-Through Plexi	$25,185
B241BAA30203001	Front & Back - 2 x 42-pole Panels - 208/120V 400A Bolt-on Cutler-Hammer	Front & Back	None	Solid Standard	$20,735

REMOTE AND RACK POWER PANEL TOPSELLERS - OPTIONS

Part Number	Description	List Price
157607364	Transient Suppression Plate - 4'W x 4'D plate	$250
157607206	Extra Knock-out Plates - 84 holes	$170
157607208	Extra Blank Plates	$170
124100030-009	Low Voltage Control Junction Box	$370

REMOTE AND RACK POWER PANEL TOPSELLERS - BRANCH BREAKERS

For branch breakers, please refer to the Eaton Branch Circuit Breakers section.

EATON POWER DISTRIBUTION, MONITORING AND ENCLOSURES

Eaton Power Distribution Rack Part Number Illustration

Eaton is now employing the use of smart part numbers to help our customers understand the product that the fits their needs. Follow the example below as reference only. For ordering purposes please select one of the pre-configured part numbers in the price book or use the online configurator available through the Power Quality web site.

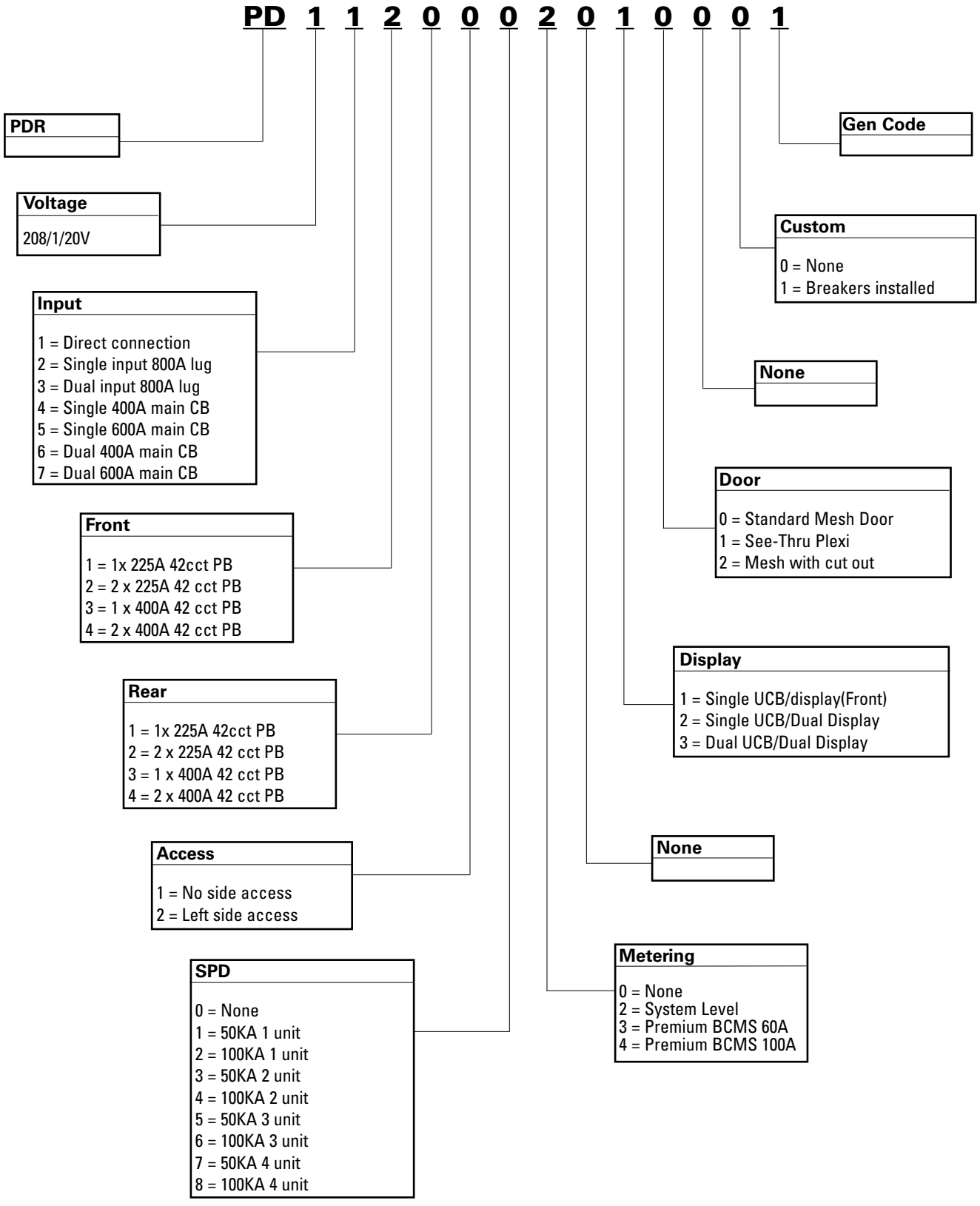

EATON POWER DISTRIBUTION, MONITORING AND ENCLOSURES

Power Distribution Rack (PDR)

Eaton PDRs are designed for high power applications in data center and rack equipment environments. The PDR packs up to four 400A column panelboards into a single EIA standard Enclosure allowing users to take full advantage of all 168 pole positions. The PDR offers top and bottom cable entry for fast, flexible installation. Available options include 100% rated breakers, plexiglas doors and cabinet main input breakers.



- Flexible power distribution with up to 168 factory-installed branch breakers in a highly compact footprint
- Designed for high-density racks, with 400A panels and high power inputs
- Aesthetically pleasing design, with an elegant rack Enclosure in textured black finish
- Free-standing unit with top and bottom cable entry for fast, flexible installation
- Front and/or rear access, column power panels, large LCD for ease of servicing
- Extensive monitoring options, including the Eaton Energy Management System

POWER DISTRIBUTION RACK TOPSELLERS

Part Number	Description	Local Display	Surge Protection	Door Style	List Price
Direct Connection to Panel Main Breakers					
System Level Monitoring					
PD1122002031001	Front & Back - 4 Panels - 208/120V 225A Bolt-on Cutler-Hammer	Front & Back	None	Plexi	$18,630
PD1120102011001	Front only - 2 Panels - 208/120V 225A Bolt-on Cutler-Hammer	Front	None	Plexi	$13,590
PD1120032010001	Front only - 2 Panels - 208/120V 225A Bolt-on Cutler-Hammer	Front	50 kA/ph per Input	Mesh	$15,140
PD1122182030001	Front & Back - 4 Panels - 208/120V 225A Bolt-on Cutler-Hammer	Front & Back	100 kA/ph per Input	Mesh	$23,580
Premium Level Monitoring with BCMS (60A max)					
PD1122003031001	Front & Back - 4 Panels - 208/120V 225A Bolt-on Cutler-Hammer	Front & Back	None	Plexi	$22,620
PD1120103011001	Front only - 2 Panels - 208/120V 225A Bolt-on Cutler-Hammer	Front	None	Plexi	$16,440
PD1120033010011	Front only - 2 Panels - 208/120V 225A Bolt-on Cutler-Hammer	Front	50 kA/ph per Input	Plexi	$18,240
PD1122183030001	Front & Back - 4 Panels - 208/120V 225A Bolt-on Cutler-Hammer	Front & Back	100 kA/ph per Input	Mesh	$27,570
Premium Level Monitoring with BCMS (100A max)					
PD1144104030001	Front & Back - 4 Panels - 208/120V 400A Bolt-on Cutler-Hammer	Front & Back	None	Mesh	$27,410
PD1122004030001	Front & Back - 4 Panels - 208/120V 225A Bolt-on Cutler-Hammer	Front & Back	None	Mesh	$22,690
PD1120004010001	Front only - 2 Panels - 208/120V 225A Bolt-on Cutler-Hammer	Front	None	Mesh	$16,340
PD1140004010001	Front only - 2 Panels - 208/120V 400A Bolt-on Cutler-Hammer	Front	None	Mesh	$19,100
Single Input Main Lug					
System Level Metering					
PD1244102030001	Front & Back - 4 Panels - 208/120V 400A Bolt-on Cutler-Hammer	Front & Back	None	Mesh	$25,100
PD1222102010001	Front & Back - 4 Panels - 208/120V 225A Bolt-on Cutler-Hammer	Front & Back	None	Mesh	$20,380
PD1200002011011	Front only - 2 Panels - 208/120V 225A Bolt-on Cutler-Hammer	Front	None	Plexi	$15,590
PD1222002031011	Front & Back - 4 Panels - 208/120V 225A Bolt-on Cutler-Hammer	Front & Back	None	Plexi	$20,630
Premium Level Monitoring with BCMS (60A max)					
PD1244103030001	Front & Back - 4 Panels - 208/120V 400A Bolt-on Cutler-Hammer	Front & Back	None	Mesh	$29,090
PD1222103030001	Front & Back - 4 Panels - 208/120V 225A Bolt-on Cutler-Hammer	Front & Back	None	Mesh	$24,370
PD1244103030011	Front & Back - 4 Panels - 208/120V 400A Bolt-on Cutler-Hammer	Front & Back	None	Plexi	$29,340
PD1244003030011	Front & Back - 4 Panels - 208/120V 400A Bolt-on Cutler-Hammer	Front & Back	None	Plexi	$24,620
Premium Level Monitoring with BCMS (100A max)					
PD1244104030001	Front & Back - 4 Panels - 208/120V 400A Bolt-on Cutler-Hammer	Front & Back	None	Mesh	$29,410
PD1222104030001	Front & Back - 4 Panels - 208/120V 225A Bolt-on Cutler-Hammer	Front & Back	None	Mesh	$24,690
PD1244104030011	Front & Back - 4 Panels - 208/120V 400A Bolt-on Cutler-Hammer	Front & Back	None	Plexi	$29,660
PD1220004011001	Front only - 2 Panels - 208/120V 225A Bolt-on Cutler-Hammer	Front	None	Plexi	$18,590

EATON POWER DISTRIBUTION, MONITORING AND ENCLOSURES

Power Distribution Rack (PDR) *(continued)*

POWER DISTRIBUTION RACK TOPSELLERS

Part Number	Description	Local Display	Surge Protection	Door Style	List Price
Dual Input Main Lugs					
System Level Metering					
PD1344102031001	Front & Back - 4 Panels - 208/120V 400A Bolt-on Cutler-Hammer	Front & Back	None	Plexi	$27,350
PD1322102030001	Front & Back - 4 Panels - 208/120V 225A Bolt-on Cutler-Hammer	Front & Back	None	Mesh	$22,380
PD1322002031001	Front & Back - 4 Panels - 208/120V 225A Bolt-on Cutler-Hammer	Front & Back	None	Plexi	$22,630
Premium Level Monitoring with BCMS (60A max)					
PD1322103031001	Front & Back - 4 Panels - 208/120V 225A Bolt-on Cutler-Hammer	Front & Back	None	Plexi	$29,940
PD1344103031001	Front & Back - 4 Panels - 208/120V 400A Bolt-on Cutler-Hammer	Front & Back	None	Plexi	$31,340
PD1322003030001	Front & Back - 4 Panels - 208/120V 225A Bolt-on Cutler-Hammer	Front & Back	None	Mesh	$26,370
PD1344003031001	Front & Back - 4 Panels - 208/120V 400A Bolt-on Cutler-Hammer	Front & Back	None	Plexi	$31,090
Premium Level Monitoring with BCMS (100A max)					
PD1322104030001	Front & Back - 4 Panels - 208/120V 225A Bolt-on Cutler-Hammer	Front & Back	None	Mesh	$26,690
PD1344104030001	Front & Back - 4 Panels - 208/120V 400A Bolt-on Cutler-Hammer	Front & Back	None	Mesh	$31,410
PD1322004031001	Front & Back - 4 Panels - 208/120V 225A Bolt-on Cutler-Hammer	Front & Back	None	Plexi	$26,940
PD1344004031001	Front & Back - 4 Panels - 208/120V 400A Bolt-on Cutler-Hammer	Front & Back	None	Plexi	$31,660
Single Input Main Breaker (400A)					
System Level Metering					
PD1420102010001	Front only - 2 Panels - 208/120V 225A Bolt-on Cutler-Hammer	Front	None	Mesh	$15,840
PD1422002030001	Front & Back - 4 Panels - 208/120V 225A Bolt-on Cutler-Hammer	Front & Back	None	Mesh	$20,880
Premium Level Monitoring with BCMS (60A max)					
PD1420003011001	Front only - 2 Panels - 208/120V 225A Bolt-on Cutler-Hammer	Front	None	See-Through Plexi	$18,940
PD1420003012001	Front only - 2 Panels - 208/120V 225A Bolt-on Cutler-Hammer	Front	None	Mesh w/ Cut-out	$18,840
Premium Level Monitoring with BCMS (100A max)					
PD1420004011001	Front only - 2 Panels - 208/120V 225A Bolt-on Cutler-Hammer	Front	None	See-Through Plexi	$19,090
PD1420004012001	Front only - 2 Panels - 208/120V 225A Bolt-on Cutler-Hammer	Front	None	Mesh w/ Cut-out	$18,990
Dual Input Main Breaker (600A)					
System Level Metering					
PD1722102030001	Front & Back - 4 Panels - 208/120V 225A Bolt-on Cutler-Hammer	Front & Back	None	Mesh	$25,380
PD1744102030001	Front & Back - 4 Panels - 208/120V 400A Bolt-on Cutler-Hammer	Front & Back	None	Mesh	$30,100
Premium Level Monitoring with BCMS (60A max)					
PD1722103031001	Front & Back - 4 Panels - 208/120V 225A Bolt-on Cutler-Hammer	Front & Back	None	Plexi	$29,370
PD1744103030001	Front & Back - 4 Panels - 208/120V 400A Bolt-on Cutler-Hammer	Front & Back	None	Mesh	$34,090
Premium Level Monitoring with BCMS (100A max)					
PD1722104031001	Front & Back - 4 Panels - 208/120V 225A Bolt-on Cutler-Hammer	Front & Back	None	Plexi	$29,690
PD1744104030001	Front & Back - 4 Panels - 208/120V 400A Bolt-on Cutler-Hammer	Front & Back	None	Mesh	$34,410

POWER DISTRIBUTION RACK TOPSELLERS - OPTIONS

Part Number	Description	List Price
103008064-5591	Power Xpert Gateway Communication PDP Card	$950
124100030-009	Control Junction Box	$370
157607364	Transient Suppression Plate	$225

Notes: PDRs come with 42-circuit column panelboards with 225A or 400A panel main breakers. Please contact factory for custom configurations.

EATON POWER DISTRIBUTION, MONITORING AND ENCLOSURES

Eaton Branch Circuit Breakers

Eaton Cutler-Hammer bolt-on branch circuit breakers can be installed in any 42-pole Cutler-Hammer panelboard providing over-current and high interrupting current protection. Single-, double- and three-pole breakers can be provided from 10 to 100A trip rating and 10 or 22 kAIC.

Single-pole Breakers

Part Number	Trip Rating	kAIC	List Price
BAB1010	10A	10	$17.00
BAB1015	15A	10	$17.00
BAB1020	20A	10	$17.00
BAB1025	25A	10	$17.00
BAB1030	30A	10	$17.00
BAB1035	35A	10	$17.00
BAB1040	40A	10	$17.00
BAB1045	45A	10	$17.00
BAB1050	50A	10	$17.00
BAB1055	55A	10	$17.00
BAB1060	60A	10	$17.00
QBHW1015	15A	22	$26.00
QBHW1020	20A	22	$26.00
QBHW1025	25A	22	$26.00
QBHW1030	30A	22	$26.00
QBHW1035	35A	22	$26.00
QBHW1040	40A	22	$26.00
QBHW1045	45A	22	$26.00
QBHW1050	50A	22	$26.00
QBHW1055	55A	22	$26.00
QBHW1060	60A	22	$26.00

Double-pole Breakers

Part Number	Trip Rating	kAIC	List Price
BAB2010	10A	10	$29.00
BAB2015	15A	10	$29.00
BAB2020	20A	10	$29.00
BAB2025	25A	10	$29.00
BAB2030	30A	10	$29.00
BAB2035	35A	10	$29.00
BAB2040	40A	10	$29.00
BAB2045	45A	10	$29.00
BAB2050	50A	10	$29.00
BAB2055	55A	10	$29.00
BAB2060	60A	10	$29.00
BAB2070	70A	10	$56.00
BAB2080	80A	10	$56.00
BAB2090	90A	10	$56.00
BAB2100	100A	10	$56.00
QBHW2015	15A	22	$41.00
QBHW2020	20A	22	$41.00
QBHW2025	25A	22	$41.00
QBHW2030	30A	22	$41.00
QBHW2035	35A	22	$41.00
QBHW2040	40A	22	$41.00
QBHW2045	45A	22	$41.00
QBHW2050	50A	22	$41.00
QBHW2055	55A	22	$41.00
QBHW2060	60A	22	$41.00
QBHW2070	70A	22	$74.00
QBHW2080	80A	22	$74.00
QBHW2090	90A	22	$74.00
QBHW2100	100A	22	$74.00

Three-pole Breakers

Part Number	Trip Rating	kAIC	List Price
BAB3015H	15A	10	$95.00
BAB3020H	20A	10	$95.00
BAB3025H	25A	10	$95.00
BAB3030H	30A	10	$95.00
BAB3035H	35A	10	$95.00
BAB3040H	40A	10	$95.00
BAB3045H	45A	10	$95.00
BAB3050H	50A	10	$95.00
BAB3055H	55A	10	$95.00
BAB3060H	60A	10	$95.00
QBHW3015H	15A	22	$138.00
BAB3070H	70A	10	$152.00
BAB3080H	80A	10	$152.00
BAB3090H	90A	10	$152.00
BAB3100H	100A	10	$152.00
QBHW3020H	20A	22	$138.00
QBHW3025H	25A	22	$138.00
QBHW3030H	30A	22	$138.00
QBHW3035H	35A	22	$138.00
QBHW3040H	40A	22	$138.00
QBHW3045H	45A	22	$138.00
QBHW3050H	50A	22	$138.00
QBHW3055H	55A	22	$138.00
QBHW3060H	60A	22	$138.00
QBHW3070H	70A	22	$220.00
QBHW3080H	80A	22	$220.00
QBHW3090H	90A	22	$220.00
QBHW3100H	100A	22	$220.00

Note: Breakers cannot be purchased separately and have to be purchased with the PDU or RPP only.

EATON POWER DISTRIBUTION, MONITORING AND ENCLOSURES

Eaton Energy Management System Upgrade Kit

Eaton EMS Upgrade Kit (EMS-UGK) extends branch circuit monitoring capabilities to any existing and third-party power distribution equipment, such as RPPs, PDUs or wall-mounted panels. This standalone device monitors, tracks and analyzes power, voltage, current and frequency readings, providing time-stamped metering, alarms, events and statistical information for better energy planning. This practical and affordable solution comes with an easy-to-use software tool to configure startup settings and options.

- Monitors up to 2 x 42-poles panels and 2 main inputs up to 400A through split core CTs
- Subfeed monitoring, 75A and 100A branch breaker CTs optional
- LCD screen for local indication of energy consumption
- Conduit box for enhanced wiring harness protection
- 208/120V or 380-415/220-240V rating for North American and International use
- Power Xpert PDP SNMP and TCP/IP Gateway Card included
- Dimensions: 15"W x 11"H x 5"D



EMS UPGRADE KIT - NORTH AMERICAN MODELS: 120/208V, 50/60Hz

Part Number	Power Monitoring	Display	Conduit Box	List Price
E11101003	1 Panel (42 Poles)	No	No	$5,050
E11201003	2 Panels (84 Poles)	No	No	$6,350
E12101003	1 Panel (42 Poles)	Yes	No	$5,550
E12201003	2 Panels (84 Poles)	Yes	No	$6,850
E11112003	1 Panel (42 Poles) & Panel Main Breaker	No	Yes	$6,260
E11212003	2 Panels (84 Poles) & Panel Main Breaker	No	Yes	$7,670
E12112003	1 Panel (42 Poles) & Panel Main Breaker	Yes	Yes	$6,760
E12212003	2 Panels (84 Poles) & Panel Main Breaker	Yes	Yes	$8,170
E11111003	1 Panel (42 Poles) & Panel Main Breaker	No	No	$6,150
E11211003	2 Panels (84 Poles) & Panel Main Breaker	No	No	$7,450
E12111003	1 Panel (42 Poles) & Panel Main Breaker	Yes	No	$6,650
E12211003	2 Panels (84 Poles) & Panel Main Breaker	Yes	No	$7,950

EMS UPGRADE KIT - INTERNATIONAL MODELS: 380/415 - 220/240V, 50/60Hz

Part Number	Power Monitoring	Display	Conduit Box	List Price
E21101003	1 Panel (42 Poles)	No	No	$5,095
E21201003	2 Panels (84 Poles)	No	No	$6,395
E22101003	1 Panel (42 Poles)	Yes	No	$5,595
E22201003	2 Panels (84 Poles)	Yes	No	$6,895
E21112003	1 Panel (42 Poles) & Panel Main Breaker	No	Yes	$6,305
E21212003	2 Panels (84 Poles) & Panel Main Breaker	No	Yes	$7,715
E22112003	1 Panel (42 Poles) & Panel Main Breaker	Yes	Yes	$6,805
E22212003	2 Panels (84 Poles) & Panel Main Breaker	Yes	Yes	$8,215
E21111003	1 Panel (42 Poles) & Panel Main Breaker	No	No	$6,195
E21211003	2 Panels (84 Poles) & Panel Main Breaker	No	No	$7,495
E22111003	1 Panel (42 Poles) & Panel Main Breaker	Yes	No	$6,695
E22211003	2 Panels (84 Poles) & Panel Main Breaker	Yes	No	$7,995

EMS UPGRADE KIT - OPTIONS

Part Number	Description	List Price
103006704	Subfeed Breaker Monitoring Kit (3 CTs)	$825
103006705	100A Branch Breaker CTs Kit (10)	$475
103006756	Extra 75A Branch Breaker CTs Kit (5)	$120

EATON POWER DISTRIBUTION, MONITORING AND ENCLOSURES

UL Listed Power Distribution Cables



Eaton's line of liquid-tight power distribution cables minimizes electrical and mechanical disturbances including harmonic distortion. These cables are UL listed for use with Integration Technology Equipment (NEC 645) and are exempt from being secured in place, making your power distribution system completely flexible and cost effective.

- Highly flexible and approved for data center environments (NEC 645)
- Custom configurations and colors available

STANDARD NEMA CABLE

NEMA Type	Hubbell PN	Volts	Amps	Phase	Breaker	Wire Qty	Wire Size	Sealtite	Fixed Price	Price Per Foot
5-15R1	5261	120	15	1	1 Pole	3	12 awg	0.5"	$130.00	$3.21
5-15R2	5262	120	15	1	1 Pole	3	12 awg	0.5"	$130.00	$3.21
5-15R4	5262	120	15	1	1 Pole	3	12 awg	0.5"	$135.00	$3.21
5-20R1	5361	120	20	1	1 Pole	3	12 awg	0.5"	$135.00	$3.21
5-20R2	5362	120	20	1	1 Pole	3	12 awg	0.5"	$110.00	$3.21
5-20R4	5362	120	20	1	1 Pole	3	12 awg	0.5"	$140.00	$3.21
5-30R1	9308	120	30	1	1 Pole	3	10 awg	0.5"	$140.00	$3.94
5-50R1	9360	120	50	1	1 Pole	3	8 awg	0.5"	$185.00	$7.19
6-15R1	5661	208	15	1	2 Pole	3	12 awg	0.5"	$130.00	$3.21
6-15R2	5662	208	15	1	2 Pole	3	12 awg	0.5"	$125.00	$3.21
6-15R4	5662	208	15	1	2 Pole	3	12 awg	0.5"	$170.00	$3.21
6-20R1	5465	208	20	1	2 Pole	3	12 awg	0.5"	$145.00	$3.21
6-20R2	5462	208	20	1	2 Pole	3	12 awg	0.5"	$135.00	$3.21
6-20R4	5462	208	20	1	2 Pole	3	12 awg	0.5"	$185.00	$3.21
6-30R1	9330	208	30	1	2 Pole	3	10 awg	0.5"	$140.00	$3.94
14-20R1	8410	120/208	20	1	2 Pole	4	12 awg	0.5"	$150.00	$3.62
14-30R1	9430	120/208	30	1	2 Pole	4	10 awg	0.5"	$185.00	$4.36
14-50R1	9450	120/208	50	1	2 Pole	4	8 awg	0.75"	$295.00	$7.80
L5-15R1	4710	120	15	1	1 Pole	3	12 awg	0.5"	$140.00	$3.21
L5-15R2	4700	120	15	1	1 Pole	3	12 awg	0.5"	$140.00	$3.21
L5-20R1	2310	120	20	1	1 Pole	3	12 awg	0.5"	$125.00	$3.21
L5-30R1	2610	120	30	1	1 Pole	3	10 awg	0.5"	$145.00	$3.94
L6-15R1	4560	208	15	2	2 Pole	3	12 awg	0.5"	$135.00	$3.21
L6-15R2	4550	208	15	2	2 Pole	3	12 awg	0.5"	$135.00	$3.21
L6-20R1	2320	208	20	2	2 Pole	3	12 awg	0.5"	$125.00	$3.21
L6-30R1	2620	208	30	2	2 Pole	3	10 awg	0.5"	$140.00	$3.94
L14-20R1	2410	120/208	20	2	2 Pole	4	12 awg	0.5"	$145.00	$3.62
L14-30R1	2710	120/208	30	2	2 Pole	4	10 awg	0.5"	$170.00	$4.36
L15-20R1	2420	208	20	3	3 Pole	4	12 awg	0.5"	$175.00	$3.62
L15-30R1	2720	208	30	3	3 Pole	4	10 awg	0.5"	$185.00	$4.36
L21-20R1	2510	208	20	3	3 Pole	5	12 awg	0.5"	$160.00	$4.36
L21-30R1	2810	208	30	3	3 Pole	5	10 awg	0.5"	$185.00	$4.99

Notes: See next page

EATON POWER DISTRIBUTION, MONITORING AND ENCLOSURES

UL Listed Power Distribution Cables *(continued)*

NEMA "IG" ISOLATED GROUND CABLE

NEMA Type	Hubbell PN	Volts	Amps	Phase	Breaker	Wire Qty	Wire Size	Sealtite	Fixed Price	Price Per Foot
5-15R1 IG	5261	120	15	1	1 Pole	4	12 awg	0.5"	$120.00	$3.62
5-15R2 IG	5262	120	15	1	1 Pole	4	12 awg	0.5"	$125.00	$3.62
5-15R4 IG	5262	120	15	1	1 Pole	4	12 awg	0.5"	$160.00	$3.62
5-20R1 IG	5361	120	20	1	1 Pole	4	12 awg	0.5"	$130.00	$3.62
5-20R2 IG	5362	120	20	1	1 Pole	4	12 awg	0.5"	$125.00	$3.62
5-20R4 IG	5362	120	20	1	1 Pole	4	12 awg	0.5"	$165.00	$3.62
5-30R1 IG	9308	120	30	1	1 Pole	4	10 awg	0.5"	$160.00	$4.41
6-15R1 IG	5661	208	15	1	2 Pole	4	12 awg	0.5"	$195.00	$3.62
6-15R2 IG	5662	208	15	1	2 Pole	4	12 awg	0.5"	$205.00	$3.62
6-15R4 IG	5662	208	15	1	2 Pole	4	12 awg	0.5"	$325.00	$3.62
6-20R1 IG	5465	208	20	1	2 Pole	4	12 awg	0.5"	$210.00	$3.62
6-20R2 IG	5462	208	20	1	2 Pole	4	12 awg	0.5"	$235.00	$3.62
6-20R4 IG	5462	208	20	1	2 Pole	4	12 awg	0.5"	$370.00	$3.62
6-30R1 IG	9330	208	30	1	2 Pole	4	10 awg	0.5"	$255.00	$4.41
L5-15R1 IG	4710	120	15	1	1 Pole	4	12 awg	0.5"	$175.00	$3.62
L5-15R2 IG	4700	120	15	1	1 Pole	4	12 awg	0.5"	$140.00	$3.62
L5-20R1 IG	2310	120	20	1	1 Pole	4	12 awg	0.5"	$135.00	$3.62
L5-30R1 IG	2610	120	30	1	1 Pole	4	10 awg	0.5"	$155.00	$4.41
L6-15R1 IG	4560	208	15	2	2 Pole	4	12 awg	0.5"	$140.00	$3.62
L6-15R2 IG	4550	208	15	2	2 Pole	4	12 awg	0.5"	$135.00	$3.62
L6-20R1 IG	2320	208	20	2	2 Pole	4	12 awg	0.5"	$135.00	$3.62
L6-30R1 IG	2620	208	30	2	2 Pole	4	10 awg	0.5"	$165.00	$4.41
L14-20R1 IG	2410	120/208	20	2	2 Pole	5	12 awg	0.5"	$155.00	$4.36
L14-30R1 IG	2710	120/208	30	2	2 Pole	5	10 awg	0.5"	$200.00	$4.99
L15-20R1 IG	2420	208	20	3	3 Pole	5	12 awg	0.5"	$205.00	$4.36
L15-30R1 IG	2720	208	30	3	3 Pole	5	10 awg	0.5"	$235.00	$4.99
L21-20R1 IG	2510	208	20	3	3 Pole	6	12 awg	0.5"	$170.00	$4.67
L21-30R1 IG	2810	208	30	3	3 Pole	6	10 awg	0.5"	$205.00	$5.51

Notes:
1. For the cables that have 0.5" conduit, to go to 0.75" conduit, please add $1.05 per foot to the above list price.
2. For the cables that have 12 awg wire, to go to 10 awg wire conduit, please add $1.00 per foot to the above list price.
3. Breakers are NOT included in the base price above.
4. The above pricing does NOT include shipping costs.
5. Please see the Cables specifications or contact the factory for details.
6. Add .63 per FT for colored LT.
7. For separate circuits for quads etc, must call for quote.
8. To construct a part number use the following format: <NEMA Type> - <Cable Length in Feet, min of 2 digits>. As an example, a 5-50R1 NEMA type with 2 feet of cable becomes 5-50R1-02.
9. Price is determined by adding the Fixed Price to Price per Foot multiplied by the cable length in feet.

EATON POWER DISTRIBUTION, MONITORING AND ENCLOSURES

UL Listed Power Distribution Cables *(continued)*

RUSSELLSTOLL & IEC CABLES

Device	Volts	Amps	Phase	Breaker	Wire Qty	Wire Size	Sealtite	Fixed Price	Price Per Foot
RS3913	250	20	2	2 Pole	3	12 awg	0.5"	$650.00	$3.21
RS3743	250	20	2	2 Pole	3	12 awg	0.5"	$845.00	$3.21
RS3913U2	250	20	2	2 Pole	3	12 awg	0.5"	$665.00	$3.21
RS3914	250	20	3	3 Pole	4	12 awg	0.5"	$755.00	$3.62
RS3933	250	30	2	2 Pole	4	10 awg	0.5"	$765.00	$4.36
RS3753	250	30	2	2 Pole	4	10 awg	0.5"	$825.00	$4.36
RS3934	250	30	3	3 Pole	4	10 awg	0.5"	$810.00	$4.36
RS3754	250	30	3	3 Pole	4	10 awg	0.5"	$875.00	$4.36
RS7428-78	600	60	3	3 Pole	4	6 awg	0.75"	$2,205.00	$10.82
9C33UO	250	30	2	2 Pole	3	10 awg	0.5"	$625.00	$4.36
9C54U2/C75	250	50	3	3 Pole	4	8 awg	0.75"	$1,080.00	$9.03
HBL360C6W	250	60	2	2 Pole	3	6 awg	0.75"	$1,050.00	$10.82
HBL460C9W	250	60	3	3 Pole	4	6 awg	0.75"	$945.00	$15.02
HBL360R9W	250	60	3	3 Pole	4	6 awg	0.75"	$1,000.00	$15.02

"FIELD WIRE" CABLES

Description	Device	Volts	Amps	Phase	Breaker	Wire Qty	Wire Size	Sealtite	Fixed Price	Price Per Foot
FW120	N/A	120	15	1	1 Pole	3	12 awg	0.5"	$130.00	$3.21
FW130	N/A	120	15	1	1 Pole	3	10 awg	0.5"	$130.00	$3.94
FW220	N/A	120	15	1	2 Pole	3	12 awg	0.5"	$170.00	$3.21
FW220N	N/A	120	20	1	2 Pole	4	12 awg	0.5"	$135.00	$3.62
FW230	N/A	120	20	1	2 Pole	3	10 awg	0.5"	$135.00	$3.94
FW230N	N/A	120	20	1	2 Pole	4	10 awg	0.5"	$175.00	$4.36
FW320	N/A	120	30	1	3 Pole	4	12 awg	0.5"	$155.00	$3.62
FW320N	N/A	208	15	1	3 Pole	5	12 awg	0.5"	$225.00	$4.46
FW330	N/A	208	15	1	3 Pole	4	10 awg	0.5"	$235.00	$4.36
FW330N	N/A	208	15	1	3 Pole	5	10 awg	0.5"	$365.00	$4.99
FW360	N/A	208	20	1	3 Pole	4	6 awg	0.75"	$140.00	$13.81
FW360N	N/A	208	20	1	3 Pole	5	6 awg	1.00"	$270.00	$16.07
FW3100	N/A	208	20	1	3 Pole	4	3 awg	1.25"	$420.00	$33.34
FW3100N	N/A	208	100	1	3 Pole	5	1 awg	1.50"	$280.00	$45.05

Notes:
1. For the cables that have 0.5" conduit, to go to 0.75" conduit, please add $1.05 per foot to the above list price. 2. For the cables that have 12 awg wire, to go to 10 awg wire conduit, please add $1.00 per foot to the above list price. 3. Breakers are NOT included in the base price above. 4. The above pricing does NOT include shipping costs. 5. Please see the Cables specifications or contact the factory for details. 6. Add .63 list per FT for colored LT. 7. For "Field Wire" cables: All single pole field wire cables include a neutral, separate "N" is not required.

EATON CATALOG NUMBER ORDERING INSTRUCTIONS

Single-phase Products

Eaton is now employing the use of smart part numbers to help our customers design the product that fits their needs and makes ordering a snap. Follow the example below to see how to easily select your product's features and create the catalog number for your order.

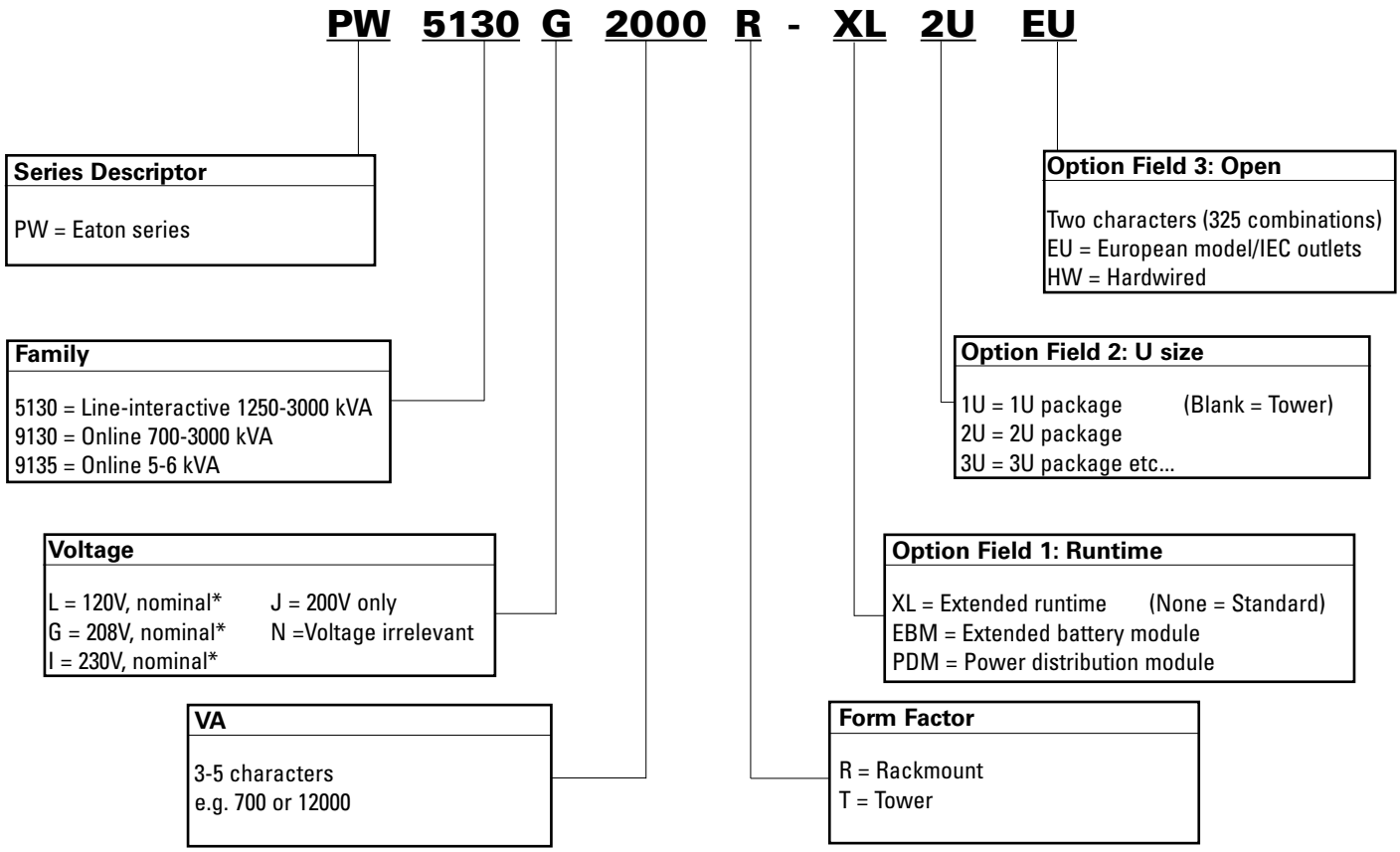

*Other selectable voltages vary by product

EATON 3S UPS

Eaton series

Now featuring a 3-year warranty with product registration!

Standby UPS (350–750 VA)

The sleek Eaton 3S delivers high efficiency and energy-saving battery backup and surge protection for your premium home and office equipment — ready to go right out of the box.

- Ease of use: Plug-and-play capability — features HID-compliant USB port for automatic integration with Windows, Mac and Linux (no drivers required)
- EcoControl for 30% greater energy savings than a typical battery backup
- Attractive design and glossy finish make the 3S a perfect fit for the modern office environment
- Up to 10 receptacles — (5) battery backup and surge protection, (5) surge protection
- Protection for devices connected to telephone, fax and Ethernet lines
- User-replaceable batteries
- Integrated graceful shutdown capability for connected devices
- Warranty (US and Canada): Three-year limited warranty (third year of warranty free with online product registration), $25,000 load protection guarantee



3S NORTH AMERICAN MODELS: 120V, 50/60 Hz

Model	Part Number	Rating (VA/Watts)	Input Connection	Output Receptacles	Dimensions (H x W x D, inches)	Weight (lb)	List Price
3S 350	3S350	350/200	5-15P	(8) 5-15R (4 Battery Backup & 4 Surge Protection only)	3.4 x 5.5 x 13.2	6.6	$88
3S 550	3S550	550/330	5-15P	(8) 5-15R (4 Battery Backup & 4 Surge Protection only)	3.4 x 5.5 x 13.2	7.3	$110
3S 750	3S750	750/450	5-15P	(10) 5-15R (5 Battery Backup & 5 Surge Protection only)	3.4 x 6.7 x 13.2	9.7	$159

SOFTWARE

To enable EcoControl functionality on the 750 VA unit, download Personal Solution-Pac software at www.eaton.com/psp. The Intelligent Power Software Suite is available for download free of charge from www.eaton.com/intelligentpower. See the software and connectivity product sections for more detail.

3S BATTERY BACKUP TIMES (in minutes)

UPS model / Load	50W	100W	150W	200W	250W	300W	350W	400W	450W
3S350	30	12	7	5					
3S550	42	18	11	6	4				
3S750	61	31	20	13	10	7	6	4	3

Note: Battery runtimes are approximate and may vary with equipment, configuration, battery age, temperature, etc.

SERVICES

For detailed information on service plans, please refer to the Single-phase Service section on page 135.

EATON 5S UPS TOWER

Now featuring a 3-year warranty with product registration!

Line-interactive UPS (550 – 1500 VA)



- Power management: Enhance your power protection capabilities and ensure safe system shutdown with the Eaton UPS Companion software. The 5S interface is auto-recognized when plugged into computers with Windows, Macintosh and Linux environments
- LCD display: Access critical UPS information including battery time and outage tracking in a single screen view with the user-friendly LCD
- Data protection: Safeguard your work and data with the UPS Companion software by gracefully shutting down your equipment during power outages
- Eco-Control: Save up to 30 percent on energy consumption by shutting down non-essential peripherals when the connected computer is turned off
- Convenient form factor: Fit the 5S easily into tight spaces with its slim form factor. The versatile 5S can be used as a tower or as a desktop monitor stand
- Surge protection: Provide surge protection for network phone lines, cable TV and satellite applications
- Battery health checks: Schedule daily, weekly or monthly health checks to verify battery performance and ensure it delivers power during the next outage
- Warranty (US and Canada): Three-year limited warranty (third year of warranty free with online product registration), $25,000 load protection guarantee

5S NORTH AMERICAN MODELS: 120V, 50/60 Hz

Catalog Number	Rating (VA/Watts)	Input Connection	Output Receptacles	Dimensions (H x W x D, inches)	Net Weight (lb)	LCD	Eco Control	List Price
5S550	550/330	5-15P (6 ft)	(8) 5-15R	9.8 x 3.4 x 10.2	12.6	No	No	$161
5S700	700/420	5-15P (6 ft)	(8) 5-15R	9.8 x 3.4 x 10.2	14.7	No	No	$179
5S700LCD	700/420	5-15P (6 ft)	(8) 5-15R	9.8 x 3.4 x 10.2	15.1	Yes	Yes	$189
5S1000LCD	1000/600	5-15P (6 ft)	(10) 5-15R	9.8 x 3.4 x 15.0	21.7	Yes	Yes	$230
5S1500LCD	1500/900	5-15P (6 ft)	(10) 5-15R	9.8 x 3.4 x 15.0	26.1	Yes	Yes	$337

5S INTERNATIONAL MODELS: 208 or 230V, 50/60 Hz

Catalog Number	Rating (VA/Watts)	Input Connection	Output Receptacles	Dimensions (H x W x D, inches)	Net Weight (lb)	LCD	Eco Control	List Price
5S700G	700/420	C14	(6) C13	9.8 x 3.4 x 10.2	13.2	No	No	$217
5S1500G	1500/900	C14	(8) C13	9.8 x 3.4 x 15.0	24.6	No	No	$388

SOFTWARE

The UPS Companion software is available for download free of charge. See the software and connectivity product sections for more detail.

5S BATTERY BACKUP TIMES (in minutes)

UPS model														
Load	30W	60W	90W	120W	150W	180W	210W	240W	270W	300W	330W	360W	390W	420W
5S550	121	56	31	20	14	10	8	6	5	4	1			
5S700	151	75	37	30	21	14	12	11	9	7	6	5	3	2
5S700G	151	75	37	30	21	14	12	11	9	7	6	5	3	2
5S700LCD	86	67	36	27	20	15	11	9	7	6	5	4	2	2
UPS model														
Load	**120W**	**180W**	**240W**	**300W**	**360W**	**420W**	**480W**	**540W**	**600W**	**660W**	**720W**	**780W**	**840W**	**900W**
5S1000LCD	43	26	18	14	10	9	6	4	3					
5S1500G	79	43	30	22	17	13	10	9	8	6	5	4	3	2
5S1500LCD	71	42	31	22	16	13	10	8	7	6	5	4	3	2

Note: Battery runtimes are approximate and may vary with equipment, configuration, battery age, temperature, etc.

SERVICES

For detailed information on service plans, please refer to the Single-phase Service section on page 135.

EATON 5SC UPS

Now featuring a 3-year warranty with product registration!

Line-interactive UPS (550 – 1500 VA)

The 5SC offers flexible integration with a small form factor and adjustable input waveform sensitivity, making it ideal for protecting tower servers, network-attached storage (NAS), network equipment, ATMs, tickets machines and kiosks.

- LCD display: Enables you to customize UPS settings, view load and power consumption
- Power management: Integrates with Intelligent Power Manager (IPM) for point-to-point power management (USB/serial) or network-based using server as a proxy
- Battery technology: Extends battery service life by 50% with ABM® technology and offers user-replaceable batteries
- Warranty and service: Protects you with a three-year warranty, which includes the battery
- Reliable power protection: Corrects a wide range of input voltage variations through buck and boost operation; Provides high quality pure-sinewave output capability, protecting any sensitive equipment connected ensuring consistent input voltage to the loads protected
- Convenient form factor: Fits easily into small spaces making the 5SC ideal for protecting tower servers, Network-attached storage (NAS), network equipment, ATMs, ticket machines and kiosks



5SC NORTH AMERICAN MODELS: 120V, 50/60 Hz

Catalog Number	Rating (VA/Watts)	Input Connection	Output Receptacles	Dimensions (H x W x D, inches)	Weight (lb)	List Price
5SC500	500/350	5-15P (6 ft)	(4) 5-15R	8.2 x 5.9 x 9.4	15.2	$285
5SC750	750/525	5-15P (6 ft)	(6) 5-15R	8.2 x 5.9 x 13.4	23.1	$410
5SC1000	1000/700	5-15P (6 ft)	(8) 5-15R	8.2 x 5.9 x 13.4	25.6	$470
5SC1500	1440/1080	5-15P (6 ft)	(8) 5-15R	8.2 x 5.9 x 16.1	34.0	$605

5SC INTERNATIONAL MODELS: 208 or 230V, 50/60 Hz

Catalog Number	Rating (VA/Watts)	Input Connection	Output Receptacles	Dimensions (H x W x D, inches)	Weight (lb)	List Price
5SC500G	500/350	C14	(4) C13	8.2 x 5.9 x 9.4	15.0	$328
5SC750G	750/525	C14	(6) C13	8.2 x 5.9 x 13.4	23.1	$472
5SC1500G	1500/1050	C14	(8) C13	8.2 x 5.9 x 16.1	33.5	$696

SOFTWARE

The Intelligent Power Software Suite is available for download free of charge. See the software and connectivity product sections for more detail.

5SC BATTERY BACKUP TIMES (in minutes)

UPS model												
Wattage	**18**	**28**	**35**	**70**	**105**	**140**	**175**	**210**	**245**	**280**	**315**	**350**
5SC500	118	89	64	29	19.6	16.3	12.1	10.4	8.9	7.1	5.3	4.7
Wattage	**26**	**42**	**53**	**105**	**158**	**210**	**263**	**315**	**368**	**420**	**473**	**525**
5SC750	120	89	71	36	24	16.6	12.6	10.6	8.7	7	6	5
5SC750G	124	100	74	38	23	16.5	12.6	10.7	8.8	7	6	4.9
Wattage	**35**	**56**	**70**	**140**	**210**	**280**	**350**	**420**	**490**	**560**	**630**	**700**
5SC1000	111	85	66	35.5	23	17	12.7	10.6	8.7	7	5.9	4.8
Wattage	**54**	**86**	**108**	**216**	**324**	**432**	**540**	**648**	**756**	**864**	**972**	**1080**
5SC1500	136	111	90	40.7	24.9	17.5	12.8	10.5	8.6	6.9	5.9	5
5SC1500G	144	109	90	41	24.7	17.3	12.7	10.4	8.4	6.8	5.8	4.8

Note: Battery runtimes are approximate and may vary with equipment, configuration, battery age, temperature, etc.

SERVICES

For detailed information on service plans, please refer to the Single-phase Service section on page 135.

EATON 5P UPS RACKMOUNT

Now featuring a 3-year warranty with product registration!

Line-interactive UPS (550–3000 VA)

- Helps save money and protect the environment through energy efficient operation (ENERGY STAR® qualified UPS)
- Enables you to customize UPS settings, view load and power consumption through the graphical interactive LCD screen interface
- Fully integrates with Intelligent Power Software Suite for continuous up time of servers and virtual machines
- Provides more real power (watts) to protect more equipment and leave room for expanding IT systems
- Extends battery service life by 50% with ABM Technology
- Warranty (US and Canada): Three-year limited warranty (third year of warranty free with online product registration), five-year extended warranty plans available, $150,000 load protection guarantee



5P RACKMOUNT 1U MODELS: 120V, 50/60 Hz

Catalog Number	Description	Rating (VA/Watts)	Input Connection	Output Receptacles	Dimensions (H x W x D, inches)	Weight (lb)	List Price
5P550R	5P 550 VA 120V Rackmount 1U	550/420	5-15P (6 ft)	(5) 5-15R	1.7 (1U) x 17.2 x 14.3	20	$441
5P750R	5P 750 VA 120V Rackmount 1U	750/600	5-15P (6 ft)	(5) 5-15R	1.7 (1U) x 17.2 x 20.0	31	$660
5P1000R	5P 1000 VA 120V Rackmount 1U	1000/770	5-15P (6 ft)	(5) 5-15R	1.7 (1U) x 17.2 x 20.0	33	$840
5P1500R	5P 1500 VA 120V Rackmount 1U	1440/1100	5-15P (6 ft)	(5) 5-15R	1.7 (1U) x 17.2 x 21.8	44	$1,064

5P RACKMOUNT 1U MODELS: 208/230V, 50/60 Hz

Catalog Number	Description	Rating (VA/Watts)	Input Connection	Output Receptacles	Dimensions (H x W x D, inches)	Weight (lb)	List Price
5P850GR	5P 850 VA 208V Rackmount 1U	850/600	C14	(4) C13	1.7 (1U) x 17.2 x 20.0	30	$716
5P1550GR	5P 1550 VA 208V Rackmount 1U	1550/1100	C14	(6) C13	1.7 (1U) x 17.2 x 21.8	43	$1,156

5P RACKMOUNT 2U MODELS: 120V, 50/60 Hz

Catalog Number	Description	Rating (VA/Watts)	Input Connection	Output Receptacles	Dimensions (H x W x D, inches)	Weight (lb)	List Price
5P1500RT	5P 1500 VA 120V Rack/Tower 2U	1440/1440	5-15P (8 ft)	(8) 5-15R	3.4 (2U) x 17.4 x 20.6	65	$1,134
5P2200RT	5P 2200 VA 120V Rack/Tower 2U	1950/1920	5-20P (8 ft)	(4) 5-15R, (4) 5-20R	3.4 (2U) x 17.4 x 20.6	65	$1,732
5P3000RT	5P 3000 VA 120V Rack/Tower 2U	3000/2700	L5-30P (10 ft)	(6) 5-20R, (1) L5-30R	3.4 (2U) x 17.4 x 20.6	87	$2,074

5P RACKMOUNT OPTIONS

Catalog Number	Description	For use with	List Price
Mounting Hardware			
RK2PA	2-post rail kit (optional) 1U	All Models except 5P550G	$109
103007018-5591	Two-post rack mounting rail kit	All RT Models	$109

Catalog Number	Description	For use with 5P model	Input Connection	Output Receptacles	Dimensions (H x W x D, inches)	List Price
Power distribution and maintenance bypass						
EHBPL1500R-PDU1U	HotSwap Maintenance Bypass (MBP)	5P550R, 5P750R, 5P1000R 5P1500R, 5P1500RT	5-15P	(6) 5-15R	2.1 x 17.3 x 3.8	$242
EHBPL2000R-PDU1U	HotSwap Maintenance Bypass (MBP)	5P2200RT	5-20P	(6) 5-15R	2.1 x 17.3 x 3.8	$289
EHBPL3000R-PDU1U	HotSwap Maintenance Bypass (MBP)	5P3000RT	L5-30P	(5) 5-20R	2.1 x 17.3 x 3.8	$420

SOFTWARE AND CONNECTIVITY OPTIONS

Catalog Number	Description	For use with	List Price
Network-MS	Network Card-MS	All Models	$279
Relay-MS	Relay / Serial Interface Card	All Models	$100
116750224-001	Environmental Monitoring Probe	All Models (requires Network-MS)	$220

See software and connectivity product sections for more detail.

EATON 5P UPS RACKMOUNT
(continued)

5P RACKMOUNT BATTERY BACKUP TIMES (in minutes)

UPS model										
Load (watts)	**50**	**100**	**200**	**400**	**600**	**700**	**800**	**1000**	**1500**	**2500**
5P550R	37	19	9	3						
5P750R		40	19	8	4					
5P850GR										
5P1000R		51	25	11	7	6				
5P1500R			47	20	12	10	8	5		
5P1550GR										
5P1500RT			56	26	15	11	9	7	3	
5P2200RT			59	33	20	16	13	8	4	
5P3000RT				41	27	22	18	14	9	4

Note: Runtimes are displayed in minutes. Runtimes are approximate and may vary with equipment, configuration, battery age, temperature, etc. View interactive runtime graphs at www.eaton.com/5Prm.

SERVICES

For detailed information on service plans, please refer to the Single-phase Service section on page 135.

EATON 5P UPS TOWER

Now featuring a 3-year warranty with product registration!

Line-interactive UPS (750–3000 VA)

- Helps save money and protect the environment through energy efficient operation (ENERGY STAR® qualified UPS)
- Enables you to customize UPS settings, view load and power consumption through the graphical interactive LCD screen interface
- Fully integrates with Intelligent Power Software Suite for continuous up time of servers and virtual machines
- Provides more real power (watts) to protect more equipment and leave room for expanding IT systems
- Extends battery service life by 50% with ABM Technology
- Warranty (US and Canada): Three-year limited warranty (third year of warranty free with online product registration), five-year extended warranty plans available, $150,000 load protection guarantee



5P TOWER MODELS: 120V, 50/60 Hz

Catalog Number	Description	Rating (VA/Watts)	Input Connection	Output Receptacles	Dimensions (H x W x D, inches)	Weight (lb)	List Price
5P750	5P 750 VA 120V Tower	750/600	5-15P (6ft)	(8) 5-15R	9.1 x 5.9 x 13.6	24	$495
5P1000	5P 1000 VA 120V Tower	1000/770	5-15P (6ft)	(8) 5-15R	9.1 x 5.9 x 13.6	25	$699
5P1500	5P 1500 VA 120V Tower	1440/1100	5-15P (6ft)	(8) 5-15R	9.1 x 5.9 x 17.5	36	$869
5P3000	5P 3000 VA 120V Tower	3000/2700	L5-30P (10 ft)	(6) 5-20R, (1) L5-30R	3.4 (2U) x 17.4 x 25.4	81	$1,696

5P TOWER MODELS: 208/230V, 50/60 Hz

Catalog Number	Description	Rating (VA/Watts)	Input Connection	Output Receptacles	Dimensions (H x W x D, inches)	Weight (lb)	List Price
5P850G	5P 850 VA 208V Tower	850/600	C14	(6) C13	9.1 x 5.9 x 13.6	23	$537
5P1550G	5P 1550 VA 208V Tower	1550/1100	C14	(8) C13	9.1 x 5.9 x 17.5	34	$943

SOFTWARE AND CONNECTIVITY OPTIONS

Catalog Number	Description	For use with	List Price
Network-MS	Network Card-MS	All Models	$279
Relay-MS	Relay / Serial Interface Card	All Models	$100
116750224-001	Environmental Monitoring Probe	All Models (requires Network-MS)	$220

See software and connectivity product sections for more detail.

5P TOWER BATTERY BACKUP TIMES (in minutes)

UPS model / Load (watts)	50	100	200	400	600	700	800	1000	1500	2500
5P750		40	19	8	4					
5P850G										
5P1000		51	25	11	7	6				
5P1500			47	20	12	10	8	5		
5P1550G										
5P3000				41	27	22	18	14	9	4

Note: Runtimes are displayed in minutes. Runtimes are approximate and may vary with equipment, configuration, battery age, temperature, etc. View interactive runtime graphs at www.eaton.com/5P.

SERVICES

For detailed information on service plans, please refer to the Single-phase Service section on page 135.

EATON 5PX UPS RACK/TOWER

Extended Run Capable

Now featuring a 3-year warranty with product registration!

Line-interactive UPS (1000–3000 VA)

The Eaton 5PX UPS provides advanced power conditioning and unparalleled battery backup for network closets and small data centers.

- Line-interactive topology with sine wave output
- Industry-leading efficiency of up to 99 percent
- Meters energy consumption down to the outlet segments
- Displays critical UPS information in a next-generation graphical LCD
- Protects more devices by providing up to 28 percent more wattage than traditional UPSs
- ABM technology extends battery life by 50 percent
- Extended available runtime by adding up to 4 EBMs
- Comes with free monitoring and management software, perfect for virtualized environments
- Hot-swappable batteries allow you to replace batteries while the UPS stays on
- Load segments enable shutdown of connected devices for increased runtime
- 4-post rail kit included (2-post rail kit optional)
- Warranty (US and Canada): Three-year limited warranty (third year of warranty free with online product registration), five-year extended warranty plans available, $150,000 load protection guarantee



5PX NORTH AMERICAN MODELS: 120V, 50/60 Hz

Catalog Number	Description	Rating (VA/Watts)	Input Connection	Output Receptacles	Dimensions (H x W x D, inches)	Weight (lb)	List Price
5PX1000RT	Eaton 5PX 1000 VA 120V Rack / Tower 2U	1000/1000	5-15P (8ft)	(8) 5-15R	3.4 (2U) x 17.4 x 20.6	62	$970
5PX1500RT	Eaton 5PX 1500 VA 120V Rack / Tower 2U	1440/1440	5-15P (8ft)	(8) 5-15R	3.4 (2U) x 17.4 x 20.6	65	$1,269
5PX1500RTN	Eaton 5PX 1500 VA with Network Card-MS	1440/1440	5-15P (8ft)	(8) 5-15R	3.4 (2U) x 17.4 x 20.6	65	$1,622
5PX2200RT	Eaton 5PX 2200 VA 120V Rack / Tower 2U	1950/1920	5-20P (8ft)	(4) 5-20R, (4) 5-15R	3.4 (2U) x 17.4 x 20.6	65	$2,102
5PX2200RTN	Eaton 5PX 2200 VA with Network Card-MS	1950/1920	5-20P (8ft)	(4) 5-20R, (4) 5-15R	3.4 (2U) x 17.4 x 20.6	65	$2,461
5PX3000RT2U	Eaton 5PX 3000 VA 120V Rack / Tower 2U	3000/2700	L5-30P (10ft)	(6) 5-20R, (1) L5-30R	3.4 (2U) x 17.4 x 25.4	87	$2,479
5PX3000RTN	Eaton 5PX 3000 VA with Network Card-MS	3000/2700	L5-30P (10ft)	(6) 5-20R, (1) L5-30R	3.4 (2U) x 17.4 x 25.4	87	$2,800
5PX3000RT3U	Eaton 5PX 3000 VA 120V Rack / Tower 3U	3000/2700	L5-30P (10ft)	(6) 5-20R, (1) L5-30R	5.1 (3U) x 17.4 x 19.6	86	$2,578

5PX INTERNATIONAL MODELS: 208/230V, 50/60 Hz

Catalog Number	Description	Rating (VA/Watts)	Input Connection	Output Receptacles	Dimensions (H x W x D, inches)	Weight (lb)	List Price
5PX1500iRT	Eaton 5PX 1500 VA 208/230V Rack / Tower 2U	1500/1350	C14	(8) C13	3.4 (2U) x 17.4 x 20.6	61	$1,433
5PX2200iRT	Eaton 5PX 2200 VA 208/230V Rack / Tower 2U	2200/1980	C20	(1) C19, (8) C13	3.4 (2U) x 17.4 x 20.6	63	$2,423
5PX3000iRT2U	Eaton 5PX 3000 VA 208/230V Rack / Tower 2U	3000/2700	C20	(1) C19, (8) C13	3.4 (2U) x 17.4 x 25.4	84	$2,809
5PX3000iRTN	Eaton 5PX 3000 VA with Network Card-MS	3000/2700	C20	(1) C19, (8) C13	3.4 (2U) x 17.4 x 25.4	84	$3,130

5PX OPTIONS

Catalog Number	Description	Rating (VA)	For use with 5PX model	Dimensions (H x W x D, inches)	Weight (lb)	List Price
Extended Battery Modules						
5PXEBM48RT	Eaton 5PX 48V EBM Rack / Tower 2U	48V	5PX1000RT, 5PX1500RT, 5PX2200RT	3.4 (2U) x 17.4 x 20.0	72	$808
5PXEBM72RT2U	Eaton 5PX 72V EBM Rack / Tower 2U	72V	5PX3000RT2U	3.4 (2U) x 17.4 x 25.5	102	$1,186
5PXEBM72RT3U	Eaton 5PX 72V EBM Rack / Tower 3U, short depth	72V	5PX3000RT3U	5.1 (3U) x 17.4 x 19.6	98	$1,186
Two-post rail kit						
103007018-5591	Two-post rack mounting rail kit (supports 2U models only)					$109

Catalog Number	Description	For use with 5PX model	Input Connection	Output Receptacles	Dimensions (H x W x D, inches)	List Price
Power distribution and maintenance bypass						
EHBPL1500R-PDU1U	HotSwap Maintenance Bypass (MBP)	5PX1000RT, 5PX1500RT	5-15P	(6) 5-15R	2.1 x 17.3 x 3.8	$242
EHBPL2000R-PDU1U	HotSwap Maintenance Bypass (MBP)	5PX2200RT	5-20P	(6) 5-15R	2.1 x 17.3 x 3.8	$289
EHBPL3000R-PDU1U	HotSwap Maintenance Bypass (MBP)	5PX3000RT2U, 5PX3000RT3U	L5-30P	(5) 5-20R	2.1 x 17.3 x 3.8	$420

For detailed information on FlexPDU and HotSwap Maintenance Bypass products, please refer to the Eaton Power Distribution and Enclosures section.

EATON 5PX UPS RACK/TOWER

Eaton series *(continued)*

SOFTWARE AND CONNECTIVITY OPTIONS

Catalog Number	Description	List Price
Network-MS	Network Card-MS	$279

See software and connectivity product sections for more detail.

View interactive runtime graphs at www.eaton.com/5PX

5PX BATTERY BACKUP TIMES (in minutes)[1]

Load (VA/Watts)	Internal Batteries	+1 EBM	+2 EBMs	+3 EBMs	+4 EBMs
5PX1000RT (with 5PXEBM48RT)					
100/70	120	462	796	1131	1466
250/175	69	286	490	695	899
500/350	30	145	254	364	473
750/525	17	83	151	219	286
1000/700	11	59	108	156	204
1000/1000[2]	7	39	71	103	135
5PX1500RT (with 5PXEBM48RT)					
150/105	81	334	550	765	981
375/262	43	187	315	442	569
750/525	18	87	150	214	277
1125/787	9	50	89	129	169
1440/1050	6	35	66	96	126
1440/1440[2]	3	21	41	62	82
5PX2200RT (with 5PXEBM48RT)					
195/136	71	274	465	656	847
488/341	39	154	270	385	501
975/682	16	67	123	179	236
1463/1045	8	36	67	93	128
1950/1365	5	26	48	65	93
2200/1920[2]	3	15	29	36	57
5PX3000RT2U or 5PX3000RT3U (with 5PXEBM72RT2U or 5PXEBM72RT3U)					
300/210	63	273	470	667	864
750/525	31	148	254	360	465
1500/1050	13	64	111	158	206
2250/1575	8	35	64	94	123
3000/2100	6	26	48	70	91
3000/2700[2]	4	19	35	52	68

1. Battery backup times are approximate and may vary with equipment, configuration, battery age, temperature, etc. International model runtimes are available; please visit www.eaton.com/5PX for details. 2. Runtimes shown at full load with maximum power factor.

SERVICES

For detailed information on service plans, please refer to the Single-phase Service section on page 135.

EATON EX UPS

Pulsar series

(this product was formerly known as the Pulsar and Pulsar M UPSs)



Online UPS (700–3000 VA)

Ideal protection for servers, data storage, network equipment, telephony, VoIP and medical equipment—industrial processes.

- True double-conversion
- Hot-swappable batteries
- Two load segments
- USB and RS-232 ports
- Rack/tower configurations provide versatility
- Four-post rail kit included with rack UPS (except where noted)
- Optional two-post rail kit

EX NORTH AMERICAN MODELS: 120V, 50/60 Hz

Catalog Number	Style Number	Description	Rating (VA/Watts)	Input Connection	Output Receptacles	Dimensions (H x W x D, inches)	Weight (lb)	List Price
PULSL700T	86700	120V TWR 0.7 kVA	700/630	5-15P	(4) 5-15R	9.52 x 6.00 x 17.31	25.7	$806
PULSL1000T	86701	120V TWR 1 kVA	1000/900	5-15P	(4) 5-15R	9.52 x 6.00 x 17.31	33.0	$969
PULSL1500T	86703	120V TWR 1.5 kVA	1500/1350	5-15P	(4) 5-15R	9.52 x 6.00 x 19.29	39.6	$1,306
PULSL1000R-XL2U	86702	120V RT2U 1 kVA	1000/900	5-15P	(6) 5-15R	3.46 (2U) x 17.25 x 19.00	39.6	$1,122
PULSL1500R-XL2U	86704	120V RT2U 1.5 kVA	1500/1350	5-15P	(6) 5-15R	3.46 (2U) x 17.25 x 19.00	45.2	$1,489
PULSML2200-XL2U	86722	120V RT2U 2.2 kVA	2100/1650	5-20P	(6) 5-20R, (1) L5-20R	3.40 (2U) x 17.30 x 25.20	68.2	$2,162
PULSML2200-XL3U	86723	120V RT3U 2.2 kVA	2100/1650	5-20P	(6) 5-20R, (1) L5-20R	5.14 (3U) x 17.30 x 19.29	70.0	$2,162
PULSML3000-XL2U	86732	120V RT2U 3 kVA	3000/2550	L5-30P	(6) 5-20R, (1) L5-30R	3.40 (2U) x 17.30 x 25.20	70.0	$2,703
PULSML3000-XL3U	86733	120V RT3U 3 kVA	3000-2550	L5-30P	(6) 5-20R, (1) L5-30R	5.14 (3U) x 17.30 x 19.29	72.0	$2,703

EX INTERNATIONAL MODELS: 230V, 50/60 Hz

Catalog Number	Style Number	Description	Rating (VA/Watts)	Input Connection	Output Receptacles	Dimensions (H x W x D, inches)	Weight (lb)	List Price
PULSI1000T	68181	230V TWR 1 kVA	1000/900	IEC C14 (10A Socket)	(6) IEC C13 (10A)	9.52 x 6.00 x 17.31	33.0	$1,028
PULSI1000R-XL2U	68182	230V RT2U 1 kVA	1000/900	IEC C14 (10A Socket)	(6) IEC C13 (10A)	3.46 (2U) x 17.25 x 19.00	39.6	$1,182
PULSI1500R-XL2U	68184	230V RT2U 1.5 kVA	1500/1350	IEC C14 (10A Socket)	(6) IEC C13 (10A)	3.46 (2U) x 17.25 x 19.00	45.0	$1,680
PULSMI2200-XL2U	68401	230V RT2U 2.2 kVA	2200/1980	IEC C20 (16A) or terminal block on 103007536-6591 PPDM	(8) IEC C13 (10A) (1) IEC C19 (16A)	3.39 (2U) x 17.32 x 25.20	68.3	$2,221
PULSMI2200-XL3U*	68400	230V RT3U 2.2 kVA	2200/1980	IEC C20 (16A) or terminal block on 103007536-6591 PPDM	(8) IEC C13 (10A) (1) IEC C19 (16A)	5.16 (3U) x 17.32 x 19.29	66.1	$2,221
PULSMI3000-XL2U	68403	230V RT2U 3 kVA	3000/2700	IEC C20 (16A) or terminal block on 103007536-6591 PPDM	(8) IEC C13 (10A) (1) IEC C19 (16A)	3.39 (2U) x 17.32 x 25.20	68.3	$3,002
PULSMI3000-XL3U*	68402	230V RT3U 3 kVA	3000/2700	IEC C20 (16A) or terminal block on 103007536-6591 PPDM	(8) IEC C13 (10A) (1) IEC C19 (16A)	5.16 (3U) x 17.32 x 19.29	66.1	$3,002

*Four-post rail kit not included

EX OPTIONS

Catalog Number	Style Number	Description	Dimensions (H x W x D, inches)	Weight (lb)	List Price
Extended Battery Modules					
PULSL1500T-EBM	86705	120/230V TWR EBM 1–1.5 kVA	9.52 x 6.00 x 17.32	46.3	$709
PULSL1500R-EBM	86706	120/230V RT EBM 1-1.5 kVA	3.40 (2U) x 17.25 x 19.00	58.1	$818
PULSMI3000-EBM	68405	120/230V RT EBM 2–3 kVA	5.16 (3U) x 17.32 x 19.29	92.4	$1,024
Optional Mounting Hardware					
PULSM-RAIL	68441	2U/3U Four-post rail kit	-	22.0	$109
-	103007018-5591	Two-post rack mounting rail kit	-	-	$109

Power distribution and maintenance bypass

For detailed information on FlexPDU and HotSwap Maintenance Bypass products, please refer to the Eaton Power Distribution and Enclosures section.

EATON EX UPS

Pulsar series *(continued)*

SOFTWARE AND CONNECTIVITY OPTIONS

Catalog Number	Description	List Price
Network-MS	Network Card-MS	$279

See software and connectivity product sections for more detail.

View interactive runtime graphs at www.eaton.com/ex

EX BATTERY BACKUP TIMES (in minutes)

Load (VA/Watts)	Standard Internal Batteries	+1 EBM	+2 EBMs	+3 EBMs	+4 EBMs
EX 700					
70/49	71	–	–	–	–
140/98	36	–	–	–	–
210/147	25	–	–	–	–
280/196	20	–	–	–	–
350/245	16	–	–	–	–
420/294	12	–	–	–	–
490/343	10	–	–	–	–
560/392	8	–	–	–	–
630/441	6	–	–	–	–
700/490	5	–	–	–	–
EX 1000 / 1000 RT 2U					
100/70	75	290	490	790	980
200/140	40	170	290	440	550
300/210	28	125	210	310	390
400/280	21	92	180	240	310
500/350	18	75	150	205	250
600/420	14	60	110	170	220
700/490	11	52	90	145	190
800/560	9	43	78	125	170
900/630	7	40	70	112	155
1000/700	6	35	60	95	135
EX 1500 / 1500 RT 2U					
150/105	60	212	360	475	700
300/210	32	110	220	280	380
450/315	21	78	155	210	260
600/420	16	60	115	160	200
750/525	13	47	83	140	180
900/630	10	40	71	110	140
1050/735	8	34	60	90	118
1200/840	7	30	52	76	100
1350/945	6	27	48	70	90
1500/1050	5	24	42	62	80
EX 2200 RT 2U & 3U*					
220/154	90	352	587	831	1216
440/308	48	200	340	470	650
660/462	30	130	225	320	450
880/616	22	100	170	260	350
1100/770	16	80	135	215	286
1320/924	13	62	110	180	240
1540/1078	10	50	95	150	200
1760/1232	8	42	80	125	170
1980/1386	7	36	65	110	152
2200/1540	6	30	51	83	134

EATON EX UPS

Pulsar series *(continued)*

EX BATTERY BACKUP TIMES (in minutes) *(continued)*

Load (VA/Watts)	Standard Internal Batteries	+1 EBM	+2 EBMs	+3 EBMs	+4 EBMs
EX 3000 RT 2U & 3U**					
300/210	79	254	454	549	847
600/420	40	130	255	290	445
900/630	25	80	160	205	290
1200/840	18	60	120	162	230
1500/1050	14	48	102	129	187
1800/1260	12	38	82	103	150
2100/1470	9	32	72	86	125
2400/1680	7	27	58	73	100
2700/1890	6	22	50	64	82
3000/2100	5	18	36	47	70

* Output power rating = 1650W ** Standard configuration power rating = 2550W, with EBM = 2100W *** Output power rating = 2150W up to 12 EBMs can be added for extended runtime of 196–1909 minutes

Note: Backup times are approximate and may vary with equipment, configuration, battery age, temperature, etc.

The Eaton EX has a 0.9 power factor, but runtimes are shown here at 0.7 power factor for easy comparison against competitor's products, which have a 0.7 power factor.

SERVICES

For detailed information on service plans, please refer to the Single-phase Service section on page 135.

EATON 9130 UPS RACKMOUNT

Powerware series



Online UPS (700–3000 VA)



The Eaton 9130 UPS delivers online power quality and scalable battery runtimes for servers, voice and data networks, storage systems and other IT equipment.

- 4-post rail kit included (2-post rail kit optional) . UPS unit designed to fit in 19 inch racks
- Fully integrates with Intelligent Power Software Suite for continuous up time of servers and virtual machines. (Included)
- Provides up to 28% more real power (watts) to protect more equipment and leave room for expanding IT systems with a 0.9 power factor
- Simplifies UPS monitoring and management with a bright LCD user interface, intuitive power management software and optional eNotify Remote Monitoring service
- Increases battery service life and system uptime up to 50% with ABM battery-charging technology and hot-swappable batteries
- Maximizes runtimes with optional extended battery modules
- Warranty (US and Canada): Two-year limited warranty, extended warranty, Onsite Flex and Onsite PowerTrust service plans

9130 NORTH AMERICAN RACK MODELS: 120V, 50/60 Hz

Catalog Number	Description	Rating (VA/Watts)	Input Connection	Output Receptacles	Dimensions (H x W x D, inches)	Weight (lb)	List Price
PW9130L700R-XL2U	9130 700 120V RACK	700/630	5-15P	(6) 5-15R	3.4 (2U) x 17.3 x 16.9	35.3	$989
PW9130L1000R-XL2U	9130 1000 120V RACK	1000/900	5-15P	(6) 5-15R	3.4 (2U) x 17.3 x 16.9	35.3	$1,272
PW9130L1500R-XL2U	9130 1500 120V RACK	1500/1350	5-15P	(6) 5-15R	3.4 (2U) x 17.3 x 16.9	43.0	$1,831
PW9130L1500R-XL2UN	9130 1500 120V RACK with Network Card-MS	1500/1350	5-15P	(6) 5-15R	3.4 (2U) x 17.3 x 16.9	43.0	$2,180
PW9130L2000R-XL2U	9130 2000 120V RACK	2000/1800	5-20P	(6) 5-20R, (1) L5-20R	3.4 (2U) x 17.3 x 22.6	63.9	$2,178
PW9130L2000R-XL2UN	9130 2000 120V RACK with Network Card-MS	2000/1800	5-20P	(6) 5-20R, (1) L5-20R	3.4 (2U) x 17.3 x 22.6	63.9	$2,512
PW9130L2500R-XL2U	9130 2500 120V RACK	2500/2250	L5-30P	(6) 5-20R, (1) L5-30R	3.4 (2U) x 17.3 x 22.6	65.0	$2,689
PW9130L3000R-XL2U	9130 3000 120V RACK	3000/2700	L5-30P	(6) 5-20R, (1) L5-30R	3.4 (2U) x 17.3 x 22.6	65.0	$3,562
PW9130L3000R-XL2UN	9130 3000 120V RACK with Network Card-MS	3000/2700	L5-30P	(6) 5-20R, (1) L5-30R	3.4 (2U) x 17.3 x 22.6	65.0	$3,910

9130 TAA COMPLIANT MODELS

Catalog Number	Description	Rating (VA/Watts)	Input Connection	Output Receptacles	Dimensions (H x W x D, inches)	Weight (lb)	List Price
PW9130L700R-XL2US	9130 700 VA 120V TAA Rack 2U	700/630	5-15P	(6) 5-15R	3.4 (2U) x 17.3 x 16.9	35.3	$1,124
PW9130L1500R-XL2US	9130 1500 VA 120V TAA Rack 2U	1500/1350	5-15P	(6) 5-15R	3.4 (2U) x 17.3 x 16.9	43.0	$1,967
PW9130L2000R-XL2US	9130 2000 VA 120V TAA Rack 2U	2000/1800	5-20P	(6) 5-20R, (1) L5-20R	3.4 (2U) x 17.3 x 22.6	63.9	$2,468
PW9130L3000R-XL2US	9130 3000 VA 120V TAA Rack 2U	3000/2700	L5-30P	(6) 5-20R, (1) L5-30R	3.4 (2U) x 17.3 x 22.6	65.0	$3,921
PW9130i3000R-XL2US	9130 3000 VA 230V TAA Rack 2U	3000/2700	IEC C20-16A[1]	(1) IEC-C19 16A, (8) IEC-C13 10A	3.4 (2U) x 17.3 x 22.6	65.0	$3,921

1. Input cord length is 6 ft 3. C20, w/detachable L6-20P cord

9130 GLOBAL RACK MODELS: 208V, 50/60 Hz

Catalog Number	Description	Rating (VA/Watts)	Input Connection[1]	Output Receptacles	Dimensions (H x W x D, inches)	Weight (lb)	List Price
PW9130G3000R-XL2U	9130 3000G RACK	3000/2700	L6-20P	(1) L6-30R, (1) L6-20R, (2) 6-20R	3.4 (2U) x 17.3 x 22.6	65.0	$3,523
PW9130G3000R-XL2UEU	9130 3000G EU RACK	3000/2700	L6-20P	(8) C13, (1) C19	3.4 (2U) x 17.3 x 22.6	65.0	$3,523

1. Input cord length is 6 ft 3. C20, w/detachable L6-20P cord

9130 INTERNATIONAL RACK MODELS: 230V, 50/60 Hz

Catalog Number	Description	Rating (VA/Watts)	Input Connection	Output Receptacles	Dimensions (H x W x D, inches)	Weight (lb)	List Price
PW9130i1000R-XL2U	9130 1000 230V RACK	1000/900	C14	(6) C13	3.4 (2U) x 17.3 x 16.9	35.3	$1,301
PW9130i1500R-XL2U	9130 1500 230V RACK	1500/1350	C14	(6) C13	3.4 (2U) x 17.3 x 16.9	43.0	$1,862
PW9130i2000R-XL2U	9130 2000 230V RACK	2000/1800	C14	(8) C13, (1) C19	3.4 (2U) x 17.3 x 22.6	63.9	$2,208
PW9130i3000R-XL2U	9130 3000 230V RACK	3000/2700	C20	(8) C13, (1) C19	3.4 (2U) x 17.3 x 22.6	65.0	$3,523

1. Input cord length is 6 ft

EATON 9130 UPS RACKMOUNT

Powerware series *(continued)*

9130 RACK OPTIONS

Catalog Number	Style Number	Description	Input Connection	Output Receptacles	Dimensions (H x W x D, inches)	Weight (lb)	List Price
Extended Battery Modules							
PW9130N1000R-EBM2U[1]	–	PW9130 700/1000 EBM Rack	–	–	3.4 (2U) x 17.3 x 16.9	48.7	$737
PW9130N1500R-EBM2U[2]	–	PW9130 1500 EBM Rack	–	–	3.4 (2U) x 17.3 x 16.9	62.0	$737
PW9130N3000R-EBM2U[3]	–	PW9130 2000/2500/3000 EBM Rack	–	–	3.4 (2U) x 17.3 x 22.6	90.6	$868
PW9130N1000R-EBM2US	–	9130 700/1000 EBM TAA Rack 2U	–	–	3.4 (2U) x 17.3 x 16.9	48.7	$857
PW9130N1500R-EBM2US	–	9130 1500 EBM TAA Rack 2U	–	–	3.4 (2U) x 17.3 x 16.9	62.0	$857
PW9130N3000R-EBM2US	–	PW9130 2000/3000 EBM TAA Rack 2U	–	–	3.4 (2U) x 17.3 x 22.6	90.6	$1,006
PowerPass® Distribution Modules (PPDMs)							
EPPDMG3000R-2U-1[5]	103007535-6591	PPDM1-HV-US-P2 3 kVA	IEC320-C20[4]	(1) L5-30R & (6) 5-20R	3.5 (2U) x 17.0 x 23.9	76.0	$1,018
EPPDMG3000R-2U-HW[5]	103007536-6591	PPDM1-HV-US-HW 3 kVA (ROHS)	Hardwire	Hardwire	3.5 (2U) x 17.0 x 23.9	76.0	$1,018
EPPDML3000R-2U-HW[6]	103007537-6591	PPDM2-LV-US-HW 3 kVA (ROHS)	Hardwire	Hardwire	3.5 (2U) x 17.0 x 23.9	20.0	$814
EPPDML3000R-2U-4[6]	103006843-6591	PPDM2-LV-US-P1 3 kVA	L5-30P[4]	(1) L5-30R & (6) 5-20R	3.5 (2U) x 17.0 x 23.9	20.0	$814
Two-post rail kit							
103007018-5591		Two-post rack mounting rail kit (supports 2U models only; 3 kVA PPDM not supported)			-	-	$109
Power distribution and maintenance bypass							
EHBPL1500R-PDU1U[7]	-	HotSwap Maintenance Bypass (MBP)	5-15P	(6) 5-15R	2.1 (2U) x 17.3 x 3.8	-	$242
EHBPL2000R-PDU1U[8]	-	HotSwap Maintenance Bypass (MBP)	5-20P	(6) 5-15R	2.1 (2U) x 17.3 x 3.8	-	$289
EHBPL3000R-PDU1U[9]	-	HotSwap Maintenance Bypass (MBP)	L5-30P	(5) 5-20R	2.1 (2U) x 17.3 x 3.8	-	$420

For detailed information on FlexPDU and HotSwap Maintenance Bypass products, please refer to the Eaton Power Distribution and Enclosures section.

1. This EBM works with 700/1000 VA models, where available
2. This EBM works with 1500 VA model
3. This EBM works with 2000/2500/3000 VA models, where available
4. Connection cables to the UPS are included with the PPDM; use the inp ut cord from the UPS as input to the PPDM, except for hardwire units
5. These PPDMs work with the following 9130 models: PW9130G3000R-XL2UEU and PW9130i3000R-XL2U.
6. These PPDMs work with the following 9130 models: PW9130L2500R-XL2U and PW9130L3000R-XL2U.
7. This HotSwap MBP works with the following 9130 models: PW9130L700R-XL2U, PW9130L1000R-XL2U, PW9130L1500R-XL2U
8. This HotSwap MBP works with the following 9130 model: PW9130L2000R-XL2U
9. This HotSwap MBP works with the following 9130 models: PW9130L2500R-XL2U, PW9130L3000R-XL2U

SOFTWARE AND CONNECTIVITY OPTIONS

Catalog Number	Description	List Price
Network-MS	Network Card-MS	$279

See software and connectivity product sections for more detail.

SERVICES

For detailed information on service plans, please refer to the Single-phase Service section on page 135.

EATON 9130 UPS RACKMOUNT

Powerware series *(continued)*

View interactive runtime graphs at www.eaton.com/9130rm

9130 RACK MODELS BATTERY BACKUP TIMES (in minutes) @ 0.7 Power Factor*

VA/Watts	Internal Batteries	+1EBM	+2 EBMs	+3 EBMs	+4 EBMs
PW9130L700R-XL2U					
700/490	14	55	102	148	175
525/368	20	77	140	179	239
350/245	32	124	189	282	414
175/123	64	200	395	552	739
PW9130L1000R-XL2U					
1000/700	10	40	73	108	149
750/525	13	58	101	152	219
500/350	24	85	172	249	304
250/175	48	190	310	451	569
PW9130i1000R-XL2U					
1000/700	10	40	78	110	150
750/525	13	55	103	151	223
500/350	22	82	186	250	312
250/175	47	190	328	431	584
PW9130L1500R-XL2U					
1500/1050	7	34	63	88	135
1125/788	11	44	84	129	210
750/525	18	79	148	207	267
375/263	38	167	278	475	540
PW9130i1500R-XL2U					
1500/1050	7	32	61	98	128
1125/788	11	47	83	126	195
750/525	18	81	143	208	262
375/263	38	171	298	416	564
PW9130L2000R-XL2U					
2000/1400	9	45	86	124	163
1500/1050	14	66	115	165	225
1000/700	26	101	185	251	343
500/350	52	197	353	481	629
PW9130i2000R-XL2U					
2000/1400	9	46	83	118	163
1500/1050	13	64	118	170	221
1000/700	25	95	190	242	345
500/350	53	205	346	488	625
PW9130L2500R-XL2U					
2500/2250	7	31	59	87	119
1875/1688	10	43	81	121	154
1250/1125	17	65	120	163	203
625/563	40	145	228	363	491
PW9130L3000R-XL2U					
3000/2100	5	25	48	72	100
2250/1575	8	37	72	102	137
1500/1050	13	60	100	165	223
750/525	34	138	228	326	438
PW9130G3000R-XL2U / PW9130G3000R-XL2UEU / PW9130i3000R-XL2U					
3000/2100	6	25	45	68	96
2250/1575	8	34	70	96	130
1500/1050	14	62	92	156	211
750/525	34	130	212	355	442

*Battery backup times are approximate and may vary with equipment, configuration, battery age, temperature, etc. The 9130 has a 0.9 power factor, but runtimes are shown here at 0.7 power factor for easy comparison against competitors' products, which have a 0.7 power factor.

EATON 9130 UPS TOWER

Powerware series



Online UPS (700–3000 VA)

The Eaton 9130 UPS delivers online power quality and scalable battery runtimes for servers, voice and data networks, storage systems and other IT equipment.

- Cuts energy usage and costs with >95% efficiency rating in high efficiency mode
- Displays critical UPS information on a bright lit, configurable LCD screen
- Ships with free monitoring and management software, perfect for virtualized environments
- True tower form factor
- Provides up to 22% more real power (watts) to protect more equipment and leave room for expanding IT systems with a 0.9 power factor
- Increases battery service life and system uptime up to 50% with ABM battery-charging technology and hot-swappable batteries
- Maximizes runtimes with optional extended battery modules (compatible with all units except the 700 VA tower models)
- Warranty (US and Canada): Two-year limited warranty, extended warranty, Onsite Flex and Onsite PowerTrust service plans

9130 NORTH AMERICAN TOWER MODELS: 120V, 50/60 Hz

Catalog Number	Description	Rating (VA/Watts)	Input Connection[1]	Output Receptacles	Dimensions (H x W x D, inches)	Weight (lb)	List Price
PW9130L700T	PW9130 700 120V TOWER	700/630	5-15P	(6) 5-15R	9.1 x 6.3 x 13.9	26.5	$931
PW9130L1000T-XL	PW9130 1000 120V TOWER	1000/900	5-15P	(6) 5-15R	9.1 x 6.3 x 15.1	30.9	$1,202
PW9130L1500T-XL	PW9130 1500 120V TOWER	1500/1350	5-15P	(6) 5-15R	9.1 x 6.3 x 17.0	41.8	$1,657
PW9130L2000T-XL	PW9130 2000 120V TOWER	2000/1800	5-20P	(1) L5-20, (4) 5-20R	12.8 x 8.4 x 16.2	77.2	$2,102
PW9130L3000T-XL	PW9130 3000 120V TOWER	3000/2700	L5-30P	(4) 5-20R, (1) L5-30R	12.8 x 8.4 x 16.2	77.2	$3,292

1. Input cord length is 6 ft

9130 GLOBAL TOWER MODELS: 208V, 50/60 Hz

Catalog Number	Description	Rating (VA/Watts)	Input Connection[1]	Output Receptacles	Dimensions (H x W x D, inches)	Weight (lb)	List Price
PW9130G2000T-XL	PW9130 2000G TOWER	2000/1800	L6-20P[2]	(1) L6-20R, (4) 6-20R	12.8 x 8.4 x 16.2	77.2	$2,133
PW9130G2000T-XLEU	PW9130 2000G EU TOWER	2000/1800	L6-20P[2]	(8) C13, (1) C19	12.8 x 8.4 x 16.1	76.1	$2,133
PW9130G3000T-XL	PW9130 3000G TOWER	3000/2700	L6-20P[3]	(1) L6-30R, (1) L6-20R, (2) 6-20R	12.8 x 8.4 x 16.2	77.2	$3,322
PW9130G3000T-XLEU	PW9130 3000G EU TOWER	3000/2700	L6-20P[3]	(8) C13, (1) C19	12.8 x 8.4 x 16.2	77.2	$3,322

1. Input cord length is 6 ft
2. C14, w/detachable 6' L6-20P cord
3. C20, w/detachable L6-20P

9130 INTERNATIONAL TOWER MODELS: 230V, 50/60 Hz

Catalog Number	Description	Rating (VA/Watts)	Input Connection	Output Receptacles	Dimensions (H x W x D, inches)	Weight (lb)	List Price
PW9130i700T	PW9130 700 230V TOWER	700/630	C14	(6) C13	9.1 x 6.3 x 13.9	26.5	$937
PW9130i1000T-XL	PW9130 1000 230V TOWER	1000/900	C14	(6) C13	9.1 x 6.3 x 15.1	30.9	$1,092
PW9130i1500T-XL	PW9130 1500 230V TOWER	1500/1350	C14	(6) C13	9.1 x 6.3 x 17.0	41.8	$1,652
PW9130i2000T-XL	PW9130 2000 230V TOWER	2000/1800	C14	(8) C13, (1) C19	12.8 x 8.4 x 16.2	77.2	$2,132
PW9130i3000T-XL	PW9130 3000 230V TOWER	3000/2700	C20	(8) C13, (1) C19	12.8 x 8.4 x 16.2	77.2	$3,241

9130 OPTIONS

Catalog Number	Description	Dimensions (H x W x D, inches)	Weight (lb)	List Price
Extended Battery Modules				
PW9130N1000T-EBM[1]	Eaton 9130 1000 Tower EBM	9.1 x 6.3 x 15.1	41.8	$610
PW9130N1500T-EBM[2]	Eaton 9130 1500 Tower EBM	9.1 x 6.3 x 17.0	52.9	$769
PW9130N3000T-EBM[3]	Eaton 9130 2000/3000 Tower EBM	12.8 x 8.4 x 16.2	110.2	$879

1. This EBM works with 1000 VA model
2. This EBM works with 1500 VA model
3. This EBM works with 2000/3000 VA models

SOFTWARE AND CONNECTIVITY OPTIONS

Catalog Number	Description	List Price
Network-MS	Network Card-MS	$279

See software and connectivity product sections for more detail.

EATON 9130 UPS TOWER

Powerware series *(continued)*

View interactive runtime graphs at www.eaton.com/9130

9130 TOWER MODELS BATTERY BACKUP TIMES (in minutes) @ 0.7 Power Factor*

VA/Watts	Internal Batteries	+1EBM	+2 EBMs	+3 EBMs	+4 EBMs
PW9130L700T					
700/490	8	N/A	N/A	N/A	N/A
525/368	12	N/A	N/A	N/A	N/A
350/245	21	N/A	N/A	N/A	N/A
175/123	37	N/A	N/A	N/A	N/A
PW9130i700T					
700/490	8	N/A	N/A	N/A	N/A
525/368	12	N/A	N/A	N/A	N/A
350/245	19	N/A	N/A	N/A	N/A
175/123	35	N/A	N/A	N/A	N/A
PW9130L1000T-XL					
1000/700	10	40	73	108	149
750/525	13	58	101	152	219
500/350	24	85	172	249	304
250/175	48	190	310	451	569
PW9130i1000T-XL					
1000/700	10	40	78	110	150
750/525	13	55	103	151	223
500/350	22	82	186	250	312
250/175	47	190	328	431	584
PW9130L1500T-XL					
1500/1050	7	34	63	88	135
1125/788	11	44	84	129	210
750/525	18	81	143	208	262
375/263	38	171	298	416	564
PW9130i1500T-XL					
1500/1050	7	32	61	88	135
1125/788	11	47	83	126	195
750/525	18	81	143	208	262
375/263	38	171	298	416	564
PW9130L2000T-XL					
2000/1400	15	61	111	156	194
1500/1050	21	81	145	184	269
1000/700	34	129	198	193	410
500/350	72	225	449	590	766
PW9130G2000T-XL / XLEU / PW9130i2000T-XL					
2000/1400	15	61	111	156	186
1500/1050	21	81	145	184	248
1000/700	34	129	198	293	410
500/350	72	225	449	590	766
PW9130L3000T-XL					
3000/2100	9	35	66	95	132
2250/1575	13	53	100	139	183
1500/1050	22	86	153	221	267
750/525	69	168	298	395	545
PW9130G3000T-XL / XLEU / PW9130i3000T-XL					
3000/2100	9	36	68	101	137
2250/1575	12	49	90	134	165
1500/1050	20	79	143	180	240
750/525	46	161	267	434	547

*Battery backup times are approximate and may vary with equipment, configuration, battery age, temperature, etc. The 9130 has a 0.9 power factor, but runtimes are shown here at 0.7 power factor for easy comparison against competitors' products, which have a 0.7 power factor.

SERVICES

For detailed information on service plans, please refer to the Single-phase Service section on page 135.

EATON 9PX SP UPS RACK/TOWER SPLIT-PHASE



6-10 kVA Split-phase

Delivering premium backup power and scalable battery runtimes for servers, voice/data networks and storage systems, the Eaton 9PX SP UPS is the ideal solution for both rack and stand-alone installations. With an advanced LCD screen interface and robust power management software, managing a UPS has never been easier with the 9PX—even in virtualized environments.

- SP models offer both 120 and 208 output without a transformer saving, u space, weight and cost
- Graphical LCD screen enables you to customize UPS settings, diagnose UPS alarms and view load and power consumption
- Provides more real power (watts) to protect more equipment and leave room for expanding IT systems
- Delivers added runtime with extended battery modules and extends battery service life by 50% with ABM Technology
- Virtualization-ready UPS includes connectivity card
- Cuts energy usage and costs with 93% efficiency rating in default, online mode
- Maximizes availability with extended battery runtime options, hot-swappable batteries, internal bypass and optional maintenance bypass
- Fully integrates with Intelligent Power Software Suite for continuous up time of servers and virtual machines. (Included)
- 4-post rail kit included (2-post rail kit optional for 9PX6KSP)
- Warranty (US and Canada): Two-year limited warranty, five-year extended warranty plans available, $250,000 load protection guarantee

9PX SP 6-10 kVA RACK/TOWER[1]: 120/208 or 120/240V OUTPUT, 50/60 Hz, SPLIT-PHASE

Catalog Number	Description	Rating (VA/Watts)	Input Connection	Output Receptacles	Dimensions (H x W x D, inches)	Weight (lb)	List Price
9PX6KSP	6kVA 9PX SP UPS	5500/4900[2]	Terminal block with L14-30P cord	(1) L14-30R, (1) L6-30R, (6) 5-20R, Hardwired	6.8 (4U) x 17.3 x 25.6	157.3	$6,820
9PX8KSP	8kVA 9PX SP UPS	8000/7200	Hardwired	(2) L14-30R, (1) L6-30R, Hardwired	10.3 (6U) x 17.3 x 27.6	225.0	$8,470
9PX10KSP	10kVA 9PX SP UPS	10000/9000[2]	Hardwired	(2) L14-30R, (1) L6-30R, Hardwired	10.3 (6U) x 17.3 x 27.6	225.0	$10,710

1. UPS and EBM ship with a 4-post rail kit, 9RK
2. 9PX SP models derated at 100/200, 120/208, 110/220V (see technical specs)

9PX SPLIT-PHASE OPTIONS

Catalog Number	Description	Input Connection	Output Receptacles	Dimensions (H x W x D, inches)	Weight (lb)	List Price
Extended runtime						
9PXEBM240SP	6K SP EBM (add up to 4 EBMs), Use with 9PX6KSP UPS			5.1 (3U) x 17.3 x 26.6	132	$1,555
EBMCBL240SP	9PX EBM Cable Extension 6kVA Split-Phase, 6ft					$350
9PXEBM360SP	8/10K EBM (add up to 4 EBMs) Use with 9PX8KSP, 9PX10KSP UPS			5.1 (3U) x 17.3 x 25.4	163	$1,555
EBMCBL360SP	9PX EBM Cable Extension 8/10kVA Split-Phase, 6ft					$350
Power distribution						
PW105BA2U420	Basic ePDU for additional output receptacles. 2U form factor.	L6-30P	(4) L6-20R	3.5 (2U) x 19.0 x 6.0		$579
PW105BA0U421	Basic ePDU for additional output receptacles. 0U form factor.	L14-30P	(24) 5-20R	66.0 (0U) x 1.89 x 2.0		$599
PW105BA2U422	Basic ePDU for additional output receptacles. 2U form factor.	L14-30P	(4) L6-20R	3.5 (2U) x 19.0 x 6.0		$649
PW105MI0U255	Monitored Ethernet ePDU output receptacles. 0U form factor.	L14-30P	(4) C19, (16) C13, (4) 5-20R	66.0 (0U) x 1.89 x 2.0		$809
ePBZ79	Basic ePDU for additional output receptacles. 1U form factor.	L6-30P	(16) C13 and (4) C19	1.7 (1U) x 17.0 x 5.1		$259
CBL139	Splitter Cable L14-30P to (2) L6-30R (4ft/2ft)	L14-30P	(2) L6-30R			$158
CBL143	Splitter Cable L14-30P to (2) L5-30R (4ft/2ft)	L14-30P	(4) L5-30R			$158
Mounting Hardware (all modules include 4-post rail kits)						
RK2PC	2-post rack mounting rail kit, works with 9PX6K UPS ONLY					$109
BINTSYS	Battery integration system - vertical mounting platform with wheels			7.9 x 20.5 x 31.5	30	$535

SERVICES

For detailed information on service plans, please refer to the Single-phase Service section on page 135.

EATON 9PX SP UPS RACK/TOWER SPLIT-PHASE

(continued)

9PX 6 kVA BATTERY BACKUP TIMES (in minutes)**

Load (Watts)	Internal Batteries	+1 EBM	+2 EBMs	+3 EBMs	+4 EBMs
5400	6	16	29	44	61
4860	7	18	32	48	68
4320	8	21	38	56	78
3780	10	25	44	66	90
3240	12	31	53	79	109
2700	15	38	66	96	133
2160	20	49	82	124	195
1620	27	68	113	198	259

9PX 11 kVA BATTERY BACKUP TIMES (in minutes)**

Load (Watts)	Internal Batteries	+1 EBM	+2 EBMs	+3 EBMs	+4 EBMs
9000	5	13	22	33	47
8100	6	15	25	38	52
7200	7	17	30	44	61
6300	8	20	35	51	71
5400	9	24	43	62	86
4500	12	30	53	77	105
3600	16	40	68	99	135
2700	23	55	95	148	193

** Runtimes shown at full load with maximum power factor, are approximate and may vary with equipment, configuration, battery age, temperature, etc.View interactive runtime graphs at www.eaton.com/9PX

EATON 9PX UPS RACK/TOWER



5-6 kVA Bundles

Delivering premium backup power and scalable battery runtimes for servers, voice/data networks and storage systems, the Eaton 9PX UPS is the ideal solution for both rack and stand-alone installations. With an advanced LCD screen interface and robust power management software, managing a UPS has never been easier with the 9PX—even in virtualized environments.

- Graphical LCD screen enables you to customize UPS settings, diagnose UPS alarms and view load and power consumption
- Provides more real power (watts) to protect more equipment and leave room for expanding IT systems
- Delivers added runtime with extended battery modules and extends battery service life by 50% with ABM Technology
- Virtualization-ready UPS includes connectivity card
- Cuts energy usage and costs with 93% efficiency rating in default, online mode
- Maximizes availability with extended battery runtime options, hot-swappable batteries, internal bypass and optional maintenance bypass
- Fully integrates with Intelligent Power Software Suite for continuous up time of servers and virtual machines. (Included)
- 4-post rail kit included (2-post rail kit optional)
- Warranty (US and Canada): Two-year limited warranty, five-year extended warranty plans available, $250,000 load protection guarantee

9PX 5-6 kVA RACK/TOWER: 208/230V[1] OUTPUT, 50/60 Hz BUNDLES

Catalog Number	Description	Rating (VA/Watts)	Input Connection[1]	Output Receptacles	Dimensions (H x W x D, inches)	Weight (lb)	List Price
9PX5K	5 kVA 9PX UPS	5000/4500	Terminal block with L6-30P cord	Hardwired + (2) L6-30R, (2) L6-20R	5.1 (3U) x 17.3 x 28.4	106	$5,509
9PX6K**	6 kVA 9PX UPS	6000/5400[2]	Terminal block with L6-30P cord	Hardwired + (2) L6-30R, (2) L6-20R	5.1 (3U) x 17.3 x 28.4	106	$6,089
9PX6KG**	6 kVA 9PX UPS Global	6000/5400[2]	Hardwired	Hardwired + (2) C19, (8) C13	5.1 (3U) x 17.3 x 27.0	106	$6,089

1. 9PX 5K, 6K operate at 200, 208 (default), 220, 230, 240V 2. 6K models derated at 200, 208, 220V (see technical specs)

9PX 5-6 kVA RACK/TOWER: 120/208/230V[3] OUTPUT, 50/60 Hz BUNDLES

Catalog Number	Description	Rating (VA/Watts)	Input Connection	Output Receptacles	Dimensions (H x W x D, inches)	Weight (lb)	List Price
9PX5KTF5	5 kVA 9PX UPS and 5 kVA Transformer	5000/4500	Terminal block with L6-30P cord	(1) L6-30R, (2) L6-20R, (18) 5-20R	10.2 (6U) x 17.3 x 28.4	201	$6,443
9PX5KP1	5 kVA 9PX UPS and 6 kVA PPDM[4]	5000/4500	L6-30P	(1) L14-30R, (1) L6-30R, (6) 5-20R	10.2 (6U) x 17.3 x 28.4	203	$6,525
9PX5KP2	5 kVA 9PX UPS and 6 kVA PPDM[4]	5000/4500	Hardwired	Hardwired	10.2 (6U) x 17.3 x 28.4	201	$6,525
9PX6KTF5	6 kVA 9PX UPS and 5 kVA Transformer	6000/5400[5]	Terminal block with L6-30P cord	(1) L6-30R, (2) L6-20R, (18) 5-20R	10.2 (6U) x 17.3 x 28.4	201	$7,089
9PX6KP1	6 kVA 9PX UPS and 6 kVA PPDM[4]	6000/5400[5]	L6-30P	(1) L14-30R, (1) L6-30R, (6) 5-20R	10.2 (6U) x 17.3 x 28.4	203	$7,181
9PX6KP2	6 kVA 9PX UPS and 6 kVA PPDM[4]	6000/5400[5]	Hardwired	Hardwired	10.2 (6U) x 17.3 x 28.4	201	$7,181

3. 9PX 5K, 6K operates at 200, 208 (default), 220, 230, 240V 4. PPDM provides external, wrap-around maintenance bypass 5. 6K models derated at 200, 208, 220V (see technical specs)

9PX OPTIONS

Catalog Number	Description	Input Connection	Output Receptacles	Dimensions (H x W x D, inches)	Weight (lb)	List Price
Extended runtime						
9PXEBM180RT	5/6 kVA EBM (add up to 4 EBMs), Cable is 18" in length			5.1 (3U) x 17.3 x 25.4	150	$1,535
EBMCBL180	9PX 5/6 kVA 6ft EBM extension cable					$156
CBLADAPT180	Adapter cable from Eaton 9135/MX UPS or EBM to 5/6 kVA 9PX UPS models					$132
Mounting Hardware (all modules include 4-post rail kits)						
RK2PC	2-post rack mounting rail kit					$109
BINTSYS	Battery integration system - vertical mounting platform with wheels			7.9 x 20.5 x 31.5	30	$535
Power distribution and maintenance bypass						
MBP6K208	Rear-mount 3U, 208V maintenance bypass for 5 and 6 kVA 9PX UPS models	Hardwired	Hardwired + (2) L6-30R			$595
PW105BA2U420	Basic ePDU for additional output receptacles. 2U form factor.	L6-30P	(4) L6-20R	3.5 (2U) x 19.0 x 6.0		$579
PW105BA0U421	Basic ePDU for additional output receptacles. 0U form factor.	L14-30P	(24) 5-20R	66.0 (0U) x 1.89 x 2.0		$599

EATON 9PX UPS RACK/TOWER *(continued)*

9PX OPTIONS *(continued)*

Catalog Number	Description	Rating (VA/Watts)	Input Connection	Output Receptacles	Dimensions (H x W x D, inches)	Weight (lb)	List Price
Power distribution and maintenance bypass (continued)							
PW105BA2U422	Basic ePDU for additional output receptacles. 2U form factor.		L14-30P	(4) L6-20R	3.5 (2U) x 19.0 x 6.0		$649
PW105MI0U255	Monitored Ethernet ePDU output receptacles. 2U form factor.		L14-30P	(4) C19, (16) C13, (4) 5-20R	66.0 (0U) x 1.89 x 2.0		$809
ePBZ79	Basic ePDU for additional output receptacles. 1U form factor.		L6-30P	(16) C13 and (4) C19	1.7 (1U) x 17.0 x 5.1		$259
Transformer accessories[6]							
9PXTFMR5	9PX 5 kVA stepdown transformer	5000	L6-30P	(18) 5-20R	5.1 (3U) x 17.3 x 25.4	95	$1,097
9PXPPDM1	9PX PowerPass Distribution Module (plug-and-play)	6000	L6-30P	(1) L14-30R, (1) L6-30R, (6) 5-20R	5.1 (3U) x 17.3 x 25.4	97	$1,252
9PXPPDM2	9PX PowerPass Distribution Module (Hardwired)	6000	Hardwired	Hardwired	5.1 (3U) x 17.3 x 25.4	95	$1,252

6. These transformer accessories may be ordered a la cart but for best pricing they should be purchased as bundled solution.

9PX BATTERY BACKUP TIMES (in minutes)**

Load (Watts)	Internal Batteries	+1 EBM	+2 EBMs	+3 EBMs	+4 EBMs
5400	3.0	16	28	47	58
4050	4.5	24	45	62	90
2700	8.5	38	71	104	133
1350	22.0	85	147	214	287
540	57.0	203	399	554	755

** Runtimes shown at full load with maximum power factor, are approximate and may vary with equipment, configuration, battery age, temperature, etc.View interactive runtime graphs at www.eaton.com/9PX

SERVICES

For detailed information on service plans, please refer to the Single-phase Service section on page 135.

EATON 9PX UPS RACK/TOWER



8-11 kVA Bundles

Delivering premium backup power and scalable battery runtimes for servers, voice/data networks and storage systems, the Eaton 9PX UPS is the ideal solution for both rack and stand-alone installations. With an advanced LCD screen interface and robust power management software, managing a UPS has never been easier with the 9PX—even in virtualized environments.

- Graphical LCD screen enables you to customize UPS settings, diagnose UPS alarms and view load and power consumption
- Provides more real power (watts) to protect more equipment and leave room for expanding IT systems
- Delivers added runtime with extended battery modules and extends battery service life by 50% with ABM Technology
- Virtualization-ready UPS includes connectivity card
- Cuts energy usage and costs with 94% efficiency rating in default, online mode
- Maximizes availability with extended battery runtime options, hot-swappable batteries, internal bypass and optional maintenance bypass
- Fully integrates with Intelligent Power Software Suite for continuous up time of servers and virtual machines. (Included)
- 4-post rail kit included
- Warranty (US and Canada): Two-year limited warranty, five-year extended warranty plans available, $250,000 load protection guarantee

9PX RACK/TOWER: 208/230V[1] OUTPUT, 50/60 Hz BUNDLES

Catalog Number	Description	Rating (VA/Watts)	Input Connection	Output Receptacles	Dimensions (H x W x D, inches)	Weight (lb)	List Price
9PX8KHW	8 kVA 9PX UPS power module and 11 kVA EBM	8000/7200	Hardwired	Hardwired	10.2 (6U) x 17.3 x 27.6	190	$7,319
9PX8K	8 kVA 9PX UPS power module, 11 kVA EBM and 11 kVA MBP	8000/7200	Hardwired	Hardwired + (3) L6-30R	10.2 (6U) x 17.3 x 30.0	205	$7,851
9PX11KHW[2]	11 kVA 9PX UPS power module and 11 kVA EBM	11000/10000	Hardwired	Hardwired	10.2 (6U) x 17.3 x 27.6	190	$8,249
9PX11K[2]	11 kVA 9PX UPS power module, 11 kVA EBM and 11 kVA MBP	11000/10000	Hardwired	Hardwired + (3) L6-30R	10.2 (6U) x 17.3 x 30.0	205	$8,515

1. 9PX 8K, 11K operate at 200, 208 (default), 220, 230, 240, 250V 2. 11K models derated at 200, 208, 220, 250V (see technical specs)

9PX RACK/TOWER: 120/208/230V OUTPUT, 50/60 Hz BUNDLES

Catalog Number	Description	Rating (VA/Watts)	Input Connection	Output Receptacles	Dimensions (H x W x D, inches)	Weight (lb)	List Price
9PX8KTF5	8 kVA 9PX UPS power module, 11 kVA EBM, 11 kVA MBP and 5 kVA Transformer	8000/7200	Hardwired	Hardwired + (2) L6-30R, (18) 5-20R	15.3 (9U) x 17.3 x 30.0	300	$8,828
9PX11KTF5[3]	11 kVA 9PX UPS power module, 11 kVA EBM, 11 kVA MBP and 5 kVA Transformer	11000/10000	Hardwired	Hardwired + (2) L6-30R, (18) 5-20R	15.3 (9U) x 17.3 x 30.0	300	$10,363
9PX11KTF11[3]	11 kVA 9PX UPS power module, 11 kVA EBM and 10 kW Transformer	11000/10000	Hardwired	Hardwired + (2) L14-30R, (8) 5-20R	15.3 (9U) x 17.3 x 27.6	377	$10,959

3. 11K models derated at 200, 208, 220, 250V (see technical specs)

9PX OPTIONS

Catalog Number	Description	Input Connection	Output Receptacles	Dimensions (H x W x D, inches)	Weight (lb)	List Price
Extended runtime						
9PXEBM240RT	8/11 kVA EBM (add up to 5 EBMs), Cable is 18" in length			5.1 (3U) x 17.3 x 26.8	143	$1,529
EBMCBL240	9PX 8/11 kVA 6ft EBM extension cable					$167
CBLADAPT240	Adapter cable from Eaton EX RT UPS or EBM to 8/11 kVA 9PX UPS models					$132
BINTSYS	Battery integration system - vertical mounting platform with wheels			7.9 x 20.5 x 31.5	30	$535
SC240RT	240V supercharger module to add up to 12 EBMs to 8 /11 kVA 9PX UPS models. Includes 4-post rail kit			5.1 (3U) x 17.3 x 26.8	34	$799
Power distribution and maintenance bypass						
MBP11K208	Rear-mount 3U, 208V maintenance bypass module for 8/11 kVA 9PX UPS models.	Hardwired	Hardwired + (3) L6-30R			$950
PW105BA2U420	Basic ePDU for additional output receptacles. 2U form factor	L6-30P	(4) L6-20R	3.5 (2U) x 19.0 x 6.0		$579
PW105BA0U421	Basic ePDU for additional output receptacles. 0U form factor.	L14-30P	(24) 5-20R	66.0 (0U) x 1.89 x 2.0		$599
PW105BA2U422	Basic ePDU for additional output receptacles. 2U form factor.	L14-30P	(4) L6-20R	3.5 (2U) x 19.0 x 6.0		$649
PW105MI0U255	Monitored Ethernet ePDU output receptacles. 2U form factor.	L14-30P	(4) C19, (16) C13, (4) 5-20R	66.0 (0U) x 1.89 x 2.0		$809

EATON 9PX UPS RACK/TOWER *(continued)*

9PX OPTIONS *(continued)*

Catalog Number	Description	Rating (VA/Watts)	Input Connection	Output Receptacles	Dimensions (H x W x D, inches)	Weight (lb)	List Price
Power distribution and maintenance bypass (continued)							
ePBZ79	Basic ePDU for additional output receptacles. 1U form factor.		L6-30P	(16) C13 and (4) C19	1.7 (1U) x 17.0 x 5.1		$259
Additional modules							
9PXTFMR5	9PX 5 kVA stepdown transformer	5000/5000	L6-30P	(18) 5-20R	5.1 (3U) x 17.3 x 25.4	95	$1,097
9PXTFMR11	9PX 10 kW stepdown transformer	10000/10000	Hardwired	Hardwired + (2) L14-30R, (8) 5-20R	5.1 (3U) x 17.3 x 25.4	187	$3,200
9PX8KPM[4]	9PX 8 kVA power module	8000/7200	Hardwired	Hardwired	5.1 (3U) x 17.3 x 27.6	46	$5,695
9PX11KPM[4]	9PX 11 kVA power module	11000/10000	Hardwired	Hardwired	5.1 (3U) x 17.3 x 27.6	46	$7,199

4. These transformer accessories may be ordered a la cart but for best pricing they should be purchased as bundled solution.

9PX BATTERY BACKUP TIMES (in minutes)**

Load (Watts)	Internal Batteries	+1 EBM	+2 EBMs	+3 EBMs	+4 EBMs	+5 EBMs
10000	3	10	18	25	34	42
7500	5.5	15	25	37	48	61
5000	10	25	42	61	80	98
2500	25	60	97	136	163	184

** Runtimes shown at full load with maximum power factor, are approximate and may vary with equipment, configuration, battery age, temperature, etc.View interactive runtime graphs at www.eaton.com/9PX

SERVICES

For detailed information on service plans, please refer to the Single-phase Service section on page 135.

EATON 9155 UPS

Powerware series

Online double-conversion UPS (8–15 kVA)

This innovative design delivers one of the industry's best combinations of high efficiency, low input current distortion and highest power factor, while conserving valuable space and offering the most cost-effective, highest performance option available today.



- True online double-conversion topology protects equipment from all nine of the most common power problems
- Industry leading power density, providing up to 13 percent more power capacity in a compact tower design including batteries
- Up to 200 percent more standard runtime out of the box, 600 percent more runtime in a smaller footprint with a 3-high module
- Up to a 74 percent footprint reduction
- Flexible voltages, as split-phase architecture creates up to 15 kVA at 100, 120, 208 or 240 Vac with no transformers required
- Flexible on-board power distribution modules (PDMs) allow for hardwired output or up to 15 different output receptacle options, reducing installation and site preparation expenses
- Plug-and-play rack Enclosure power distribution with the on-board PDU
- Inherently scalable from 8–15 kVA, allowing you to pay as you grow or increase capacity with no additional hardware purchases or installation concerns
- Eaton's patented Hot Sync paralleling technology allows for wireless paralleling in the event of communications failure, providing the industry's only truly redundant paralleling technology
- Flexible 0 footprint extended run configurations allow for adding additional runtime in the same industry-leading compact footprint available
- Includes on-site 5x8 startup and operator training by Eaton field technician
- Includes one year of eNotify remote monitoring service (requires connectivity parts and self installation)

9155 MODELS

Model	Part Number[1]	Rating[2] (kVA/kW)	Input Connection	Output Receptacles	Dimensions (H x W x D, inches)	Weight[3] (lb)	List Price
PW9155 8 kVA 32 Battery (2-high)	K40811000000000	8/7.2	Hardwired	Optional	32.2 x 12.0 x 33.7	352	$10,658
PW9155 8 kVA 64 Battery (3-high)	K40812000000000	8/7.2	Hardwired	Optional	47.8 x 12.0 x 33.7	590	$12,674
PW9155 8 kVA 32 Battery w/Trans. Mod. (3-high)	K40813000000000	8/7.2	Hardwired	Optional	47.8 x 12.0 x 33.7	558	$14,655
PW9155 10 kVA 32 Battery (2-high)	K41011000000000	10/9	Hardwired	Optional	32.2 x 12.0 x 33.7	352	$12,227
PW9155 10 kVA 64 Battery (3-high)	K41012000000000	10/9	Hardwired	Optional	47.8 x 12.0 x 33.7	590	$14,567
PW9155 10 kVA 32 Battery w/Trans. Mod. (3-high)	K41013000000000	10/9	Hardwired	Optional	47.8 x 12.0 x 33.7	558	$16,752
PW9155 12 kVA 32 Battery (2-high)	K41211000000000	12/10.8	Hardwired	Optional	32.2 x 12.0 x 33.7	352	$12,858
PW9155 12 kVA 64 Battery (3-high)	K41212000000000	12/10.8	Hardwired	Optional	47.8 x 12.0 x 33.7	590	$15,220
PW9155 12 kVA 32 Battery w/Trans. Mod. (3-high)	K41213000000000	12/10.8	Hardwired	Optional	47.8 x 12.0 x 33.7	558	$17,318
PW9155 15 kVA 32 Battery (2-high)	K41511000000000	15/13.5	Hardwired	Optional	32.2 x 12.0 x 33.7	352	$13,971
PW9155 15 kVA 64 Battery (3-high)	K41512000000000	15/13.5	Hardwired	Optional	47.8 x 12.0 x 33.7	590	$16,632
PW9155 15 kVA 32 Battery w/Trans. Mod. (3-high)	K41513000000000	15/13.5	Hardwired	Optional	47.8 x 12.0 x 33.7	558	$18,808

1. 50/60 Hz auto-sensing. All models can be used for frequency/phase conversion with derated 80% load, please refer to manual for details. 2. Input voltage 100/200, 110/220, 120/240, Vac 180° phase displacement, 120/208, 127/220 Vac 120° phase displacement. Output voltages are user-selectable 100/200, 110/220, 120/240 Vac 180° phase displacement. 3. Weight is installed weight, add 47 lb (2-modules high) or 50 lb (3-modules high) to determine shipping weight.

BUILT-IN CONNECTIVITY OPTIONS

Available X-Slot card options (The UPS has two X-Slot bays available; one X-Slot card can be factory installed, the second X-Slot card can be ordered separately and user-installed.)

Description	Value for CTO Digit 8	Part Number (if ordered separately)	List Price
NONE (No Pre-installed X-Slot card)	0	-	$0
Power Xpert Gateway Card	3	103007974-5591	$450
Modbus Card-X-Slot	4	103005425-5591	$661
Relay Interface Card-X-Slot (AS/400 Compatible)	5	1018460	$146
Industrial Relay and Display Drive Card X-Slot	6	103003055	$335

SOFTWARE AND CONNECTIVITY OPTIONS

Description	Part Number	List Price
Power Xpert Gateway UPS Card	PXGXUPS (103007974-5591)	$450

Bundled with Intelligent Power Software Suite CD and communication cable. See the software and connectivity sections for more details.

EATON 9155 UPS

Powerware series *(continued)*

OUTPUT RECEPTACLES AND MAINTENANCE BYPASS

Order Number	Description	Dimensions (H x W x D, inches)	Weight (lb)	List Price
See worksheet below:	Power Distribution Module (PDM) with Mechanical Bypass Switch (rear UPS mount)*	16.5 x 12.0 x 7.0	25.0	$999

Receptacle Codes (Qty) NEMA Type

(Select digits 9–12 in the CTO number)

PDM Worksheet CTO	Description	Voltage	Phase	Price Adder per Receptacle Code Chosen
S	Mechanical Bypass Module only			$999
A	(4) 5-15R	120V	Single	$220
B	(4) 5-20R UL	120V	Single	$220
D	(4) 6-15R	208V	Dual	$220
E	(4) 6-20R	208V	Dual	$220
F	(4) L5-15R	120V	Single	$220
G	(2) L5-20R*	120V	Single	$220
H	(2) L5-30R*	120V	Single	$220
I	(2) L6-15R	208V	Dual	$220
J	(2) L6-20R*	208V	Dual	$220
K	(2) L6-30R*	208V	Dual	$220
L	(2) L14-20R*	120/208V	Dual	$220
M	(2) L14-30R*	120/208V	Dual	$220
X	Blank Plate	-	-	$20
0 (Zero)	Last Product Identifier Number	-	-	-

Notes: If any output receptacles are chosen, the Maintenance Bypass module will be included and will add $999 to the cost. Maximum 4 choices within CTO part number (9-12). The combined quantities of LOCKING receptacles (denoted with a *) must not exceed four. Please be sure to utilize the "X" designation for any of the 4 total slots not populated. * Please contact factory for custom configuration availability.

* If only mechanical bypass is chosen, remaining three slots should be populated with "0".

9155 OPTIONS

Model Number	Description	Dimensions (H x W x D, inches)	Weight (lb)	List Price
Hot Sync (Parallel Systems)*				
124100017-001	9155 Parallel Tie Cabinet	24.00 x 20.30 x 6.00	80.0	$1,719
103004336	CAN Bridge Card	-	-	$530
Note: Up to (3) PW9155s can be paralleled within the Parallel Tie Cabinet and each UPS must include a Hot Sync CAN Bridge Card installed in the 2nd X-Slot.				
Extended Battery Module				
103004192-5501	PW9155 EBM 64 (2-high Stack)	32.20 x 12.00 x 30.20	480.0	$6,099
103004193-5501	PW9155 EBM 96 (3-high Stack)	47.80 x 12.00 x 30.20	710.0	$8,702
Note: Up to (4) EBM64s or (3) EBM96s can be added for additional runtime.				
Maintenance Bypass Module (MBM)				
BPE20MBB1A	Wall-mounted Maintenance Bypass Module	21.00 x 14.00 x 6.75	34.0	$1,790
9155 Upgrade Packages				
103004195	PW9155 One-step kVA Upgrade Kit			$1,350
103004196	PW9155 Two-step kVA Upgrade Kit			$2,703
Seismic Kit				
103004194-5501	Seismic kit, Rated Zone 4, UL tested, performance rating based on NEBS GR-63-CORE Standard Vibration Test		136.0	$2,023

Notes: An 8 to 15 kVA upgrade would require purchase of a one and two-step upgrade. Up to three 9155s can be paralleled within the Parallel Tie Cabinet and each UPS must include CAN Bridge Card installed in the second X-Slot. For extended runtime applications, each UPS must have dedicated and identical number of EBMs. Kit includes CAN Bridge Card and Instructions.

* Eaton startup is required for factory warranty of parallel configuration.

9155 UPGRADES

Description	Part Number	List Price
9155–2 Unit Parallel Upgrade Kit[4]	103004626	call for quotation
9155–3 Unit Parallel Upgrade Kit[4]	103004627	call for quotation

1. Up to three PW9155s can be paralleled with the parallel cabinet. 2. Each 9155 must have a Hot Sync Bridge CAN Card installed in the second X-Slot communication bay. 3. If extended runtime is required for the application, then each UPS must have its own EBM and the same number of EBM(s). 4. Kit includes CAN Bridge Card and instructions.

EATON 9155 UPS

Powerware series *(continued)*

9155 BATTERY BACKUP TIMES (in minutes) @ 0.9 Power Factor

Load (VA/Watts)	UPS + Internal 32 Battery	+1 EBM 64	+2 EBM 64	+3 EBM 64	+4 EBM 64	UPS + Internal 64 Battery	+1 EBM 96	+2 EBM 96	+3 EBM 96
15000/13500	4.6	23.0	43.0	65.1	88.6	13.3	43.0	76.7	113.0
14500/13050	4.9	24.1	45.2	68.3	93.0	14.1	45.2	80.5	119.0
14000/12600	5.2	25.2	47.3	71.5	97.4	14.9	47.3	84.2	125.0
13500/12150	5.5	26.4	49.4	74.7	102.0	15.8	49.4	88.1	130.0
13000/11700	5.8	27.6	51.6	78.1	106.0	16.7	51.6	92.0	136.0
12500/11250	6.1	28.8	54.0	81.6	111.0	17.6	54.0	96.2	142.0
12000/10800	6.5	30.2	56.5	85.5	116.0	18.6	56.5	101.0	149.0
11500/10350	6.9	31.6	59.3	89.7	122.0	19.2	59.3	106.0	156.0
11000/9900	7.3	33.3	62.4	94.4	129.0	20.2	62.4	111.0	164.0
10500/9450	7.8	35.1	65.9	99.6	136.0	21.4	65.9	117.0	174.0
10000/9000	8.4	37.2	69.8	106.0	144.0	22.6	69.8	124.0	184.0
9500/8550	9.1	39.6	74.2	112.0	153.0	24.1	74.2	132.0	196.0
9000/8100	9.9	42.3	79.4	120.0	163.0	25.7	79.4	141.0	209.0
8500/7650	10.8	45.5	85.2	129.0	175.0	27.6	85.2	152.0	225.0
8000/7200	11.9	49.1	91.9	139.0	189.0	29.8	91.9	164.0	242.0
7500/6750	13.1	53.2	99.7	151.0	205.0	32.3	99.7	178.0	263.0
7000/6300	14.6	58.0	109.0	164.0	224.0	35.2	109.0	194.0	286.0
6500/5850	16.3	63.5	119.0	180.0	245.0	38.6	119.0	212.0	314.0
6000/5400	18.4	70.0	131.0	198.0	270.0	42.5	131.0	234.0	346.0
5500/4950	20.1	77.6	145.0	220.0	300.0	47.2	145.0	259.0	383.0
5000/4500	22.4	86.6	162.0	245.0	334.0	52.6	162.0	289.0	428.0
4500/4050	25.2	97.4	182.0	276.0	376.0	59.2	182.0	325.0	-
4000/3600	28.6	110.0	207.0	313.0	426.0	67.1	207.0	369.0	-
3500/3150	32.8	127.0	238.0	359.0	-	77.0	238.0	423.0	-
3000/2700	38.3	148.0	277.0	418.0	-	89.7	277.0	-	-
2500/2250	45.6	176.0	329.0	-	-	107.0	329.0	-	-

Note: Backup times are approximate and may vary with equipment, configuration, battery age, temperature, etc.

SERVICES

For detailed information on service plans, please refer to the Single-phase Service section on page 139.

EATON 9170+ UPS RACK/TOWER

Powerware series

Online double-conversion UPS (3–18 kVA)

Reliable online, high-frequency, double-conversion power protection that provides flexible solutions for mission-critical applications.

- N + X power and logic redundancy eliminating all system level single point-of-failure
- Easily scalable to adapt to changing IT environments by simply adding power and/or battery modules
- Double-conversion, online design delivers the highest level of protection
- ABM technology significantly increases battery service life
- Hot-swappable battery and power modules, each weighing less than 30 pounds for easy handling and replacement
- Power management software bundle provides monitoring and shutdown capabilities
- Warranty (US and Canada): Two-year limited warranty and $250,000 load protection guarantee; optional Gold Plans available



9170+ MODELS

Model	Part Number	Dimensions (H x W x D, inches)	Weight (lb)	List Price
9170+ Modules				
Split-phase Power Module (100/200, 120/208, 127/220, 110/220, 120/240V In & Out)	ASY-0673	4.23 x 14.12 x 15.25	17	$2,070
Universal Power Module (208-240V In & Out)	ASY-0674	4.23 x 14.12 x 15.25	17	$1,952
Battery Module (two required per slot/string)[1]	ASY-0529	4.23 x 7.012 x 14.75	30	$402
Optional 20 Amp Charger Module (same form factor as 3 kVA power modules)	ASY-0675	4.23 x 14.12 x 14.75	17	$2,858
Note: For 9170 replacement modules, contact our Service Group at 800.356.5737 for pricing.				
UPS Enclosures				
3-slot Enclosure (3 kVA max.), Hardwired Input/Output	0660C030AAAAAAAI	17.80 x 17.00 x 25.40	66	$2,049
6-slot Enclosure (3, 6 or 9 kVA), Hardwired Input/Output	0660C060AAAAAAAI	31.50 x 17.00 x 25.40	103	$2,355
9-slot Enclosure (3, 6, 9, 12, 15 or 18 kVA), Hardwired Input/Output	0660C090AAAAAAAI	47.00 x 24.00 x 28.40	158	$2,620
12-slot Enclosure (3, 6, 9, 12, 15 or 18 kVA), Hardwired Input/Output	0660C120AAAAAAAI	60.70 x 24.00 x 28.40	196	$2,916
9-slot rack Enclosure	0660C092AAAAAAAI	45.00 x 17.00 x 25.40	158	$2,930
12-slot rack Enclosure	0660C122AAAAAAAI	58.00 x 17.00 x 25.40	196	$3,216
External Options				
Rack Kit (3- & 6-slot Enclosure only)	ASY-0547	-	15	$170
Caster option for 3- & 6-slot Enclosure	ASY-0527	-	9	$210
External battery connection option (matching cabinet for hot-swap battery modules)	ASY-0525	-	8	$275
Floor Anchoring kit	ASY-0548	-	6	$70
6-slot external battery Enclosure: black[1]	ASY-0612	31.50 x 17.00 x 25.40	93	$1,550
9-slot external battery Enclosure: black[1]	ASY-0737	47.00 x 24.00 x 28.40	148	$1,975
12-slot external battery Enclosure: black[1]	ASY-0738	60.70 x 24.00 x 28.40	186	$2,695
12-slot Enclosure w/AC for charger option: black	ASY-0739	60.70 x 24.00 x 28.40	196	$2,975
12-slot rack external battery Enclosure: black	103004136	58.00 x 17.00 x 25.40	186	$2,486
12-slot rack external battery Enclosure w/AC charger option: black	103004137	58.00 x 17.00 x 25.40	196	$3,135
Rail Kit Option for 3 & 6 slot rackmount[2]	103007312	-	12	$310
1. External Battery Cabinet connection option (ASY-0525) required with each battery cabinet.				
2. Rail kit optional for 3 & 6 slot rackmount chassis - included with 9 & 12 slot rackmount chassis				
Wall-mounted Maintenance Bypass Cabinets				
3- & 6-slot Enclosure (Make-Before-Break)	BPE14MBB1A	21.0 x 14.0 x 6.75	31	$1,385
9- & 12-slot Enclosure (Break-Before-Make)	BPE20BBM1A	21.0 x 14.0 x 6.75	34	$1,556
9- & 12-slot Enclosure (Make-Before-Break)	BPE20MBB1A	21.0 x 14.0 x 6.75	34	$1,790

EATON 9170+ UPS RACK/TOWER

Powerware series *(continued)*

9170+ PRE-CONFIGURED SYSTEMS

Model Number	Rating	Input Connection	Output Receptacles	Dimensions (H x W x D, inches)	Weight (lb)	List Price
Pre-configured Systems with Hardwire Input and Output Options						
PW3S3K Includes: (1) 3-slot Enclosure (1) power module (2) battery modules (1) caster kit	3 kVA expandable to 3 kVA N+1	Hardwired	Hardwired	19.5 x 17.0 x 25.5	155	$5,103
PW6S3K Includes: (1) 6-slot Enclosure (1) power module (2) battery modules (1) caster kit	3 kVA expandable to 9 kVA N+X	Hardwired	Hardwired	33.3 x 17.0 x 25.5	155	$ 5,409
PW6S6K Includes: (1) 6-slot Enclosure (2) power modules (4) battery modules (1) caster kit	6 kVA expandable to 9 kVA N+X	Hardwired	Hardwired	33.3 x 17.0 x 25.5	232	$ 8,253
PW6S9K Includes: (1) 6-slot Enclosure (3) power modules (6) battery modules (1) caster kit	9 kVA expandable to 9 kVA N+X	Hardwired	Hardwired	33.3 x 17.0 x 25.5	346	$11,097
PW9S9K Includes: (1) 9-slot Enclosure (3) power modules (6) battery modules	9 kVA expandable to 18 kVA N+X	Hardwired	Hardwired	47.0 x 24.0 x 28.5	389	$11,152
PW12S9K Includes: (1) 12-slot Enclosure (3) power modules (6) battery modules	9 kVA expandable to 18 kVA N+X	Hardwired	Hardwired	60.7 x 24.0 x 28.5	427	$11,448
PW12S12K Includes: (1) 12-slot Enclosure (4) power modules (8) battery modules	12 kVA expandable to 18 kVA N+X	Hardwired	Hardwired	60.7 x 24.0 x 28.5	504	$14,292
PW12S15K Includes: (1) 12-slot Enclosure (5) power modules (10) battery modules	15 kVA expandable to 18 kVA N+X	Hardwired	Hardwired	60.7 x 24.0 x 28.5	581	$17,136
PW12S18K Includes: (1) 12-slot Enclosure (6) power modules (12) battery modules	18 kVA expandable to 18 kVA N+X	Hardwired	Hardwired	60.7 x 24.0 x 28.5	658	$19,980

Replacement batteries—contact Sales Support 800.356.5794, option 3.

EATON 9170+ UPS RACK/TOWER

Powerware series *(continued)*

PRE-CONFIGURED SYSTEMS WITH HARDWIRE INPUT AND RECEPTACLES OUTPUT OPTIONS

Model Number	Rating	Input Connection	Output Receptacles	Dimensions (H x W x D, inches)	Weight (lb)	List Price
PW6S3K-PD Includes: (1) 6-slot Enclosure (1) power modules (2) battery modules (1) caster kit	3 kVA expandable to 9 kVA N+X	Hardwired	(2) L14-30R, (2) L6-30R, (12) 5-20R	33.3 x 17.0 x 25.5	192	$5,823
PW6S6K-PD Includes: (1) 6-slot Enclosure (2) power modules (4) battery modules (1) caster kit	6 kVA expandable to 9 kVA N+X	Hardwired	(2) L14-30R, (2) L6-30R, (12) 5-20R	33.3 x 17.0 x 25.5	269	$8,667
PW6S9K-PD Includes: (1) 6-slot Enclosure (3) power modules (6) battery modules (1) caster kit	9 kVA expandable to 9 kVA N+X	Hardwired	(2) L14-30R, (2) L6-30R, (12) 5-20R	33.3 x 17.0 x 25.5	346	$11,511
PW9S9K-PD Includes: (1) 9-slot Enclosure (3) power modules (6) battery modules	9 kVA expandable to 18 kVA N+X	Hardwired	(2) L14-30R, (2) L6-30R, (12) 5-20R	47.0 x 24.0 x 28.5	389	$11,566
PW12S9K-PD Includes: (1) 12-slot Enclosure (3) power modules (6) battery modules	9 kVA expandable to 18 kVA N+X	Hardwired	(3) L14-30R, (3) L6-30R, (12) 5-20R	60.7 x 24.0 x 28.5	427	$12,000
PW12S12K-PD Includes: (1) 12-slot Enclosure (4) power modules (8) battery modules	12 kVA expandable to 18 kVA N+X	Hardwired	(3) L14-30R, (3) L6-30R, (12) 5-20R	60.7 x 24.0 x 28.5	504	$14,844
PW12S15K-PD Includes: (1) 12-slot Enclosure (5) power modules (10) battery modules	15 kVA expandable to 18 kVA N+X	Hardwired	(3) L14-30R, (3) L6-30R, (12) 5-20R	60.7 x 24.0 x 28.5	581	$17,688
PW12S18K-PD Includes: (1) 12-slot Enclosure (6) power modules (12) battery modules	18 kVA expandable to 18 kVA N+X	Hardwired	(3) L14-30R, (3) L6-30R, (12) 5-20R	60.7 x 24.0 x 28.5	658	$20,532
PW3S3K-LPD Includes: (1) 3-slot Enclosure (1) power modules (2) battery modules (1) caster kit	3 kVA expandable to 3 kVA N+1	L14-30P	(1) L14-30R, (1) L6-30R, (4) 5-20R	19.5 x 17.0 x 25.5	155	$5,467
PW6S3K-LPD Includes: (1) 6-slot Enclosure (1) power modules (2) battery modules (1) caster kit	3 kVA expandable to 9 kVA N+X	14-50P	(2) L14-30R, (2) L6-30R, (12) 5-20R	33.3 x 17.0 x 25.5	192	$5,972
PW6S6K-LPD Includes: (1) 6-slot Enclosure (2) power modules (4) battery modules (1) caster kit	6 kVA expandable to 9 kVA N+X	14-50P	(2) L14-30R, (2) L6-30R, (12) 5-20R	33.3 x 17.0 x 25.5	269	$8,815

Notes: 50/60 Hz automatic frequency selection. Input/output voltages: 208–240 Vac or 100/200, 110/220, 120/208, 120/240 and 127/220 Vac. Pre-configured systems (3) and (6) slot Enclosure dimensions include caster kit. Each pre-configured system includes a 6.5-minute runtime. Backup times are approximate and may vary with equipment, configuration, battery age, temperature, etc. Split-phase Power Modules included.

EATON 9170+ UPS RACK/TOWER

Powerware series *(continued)*

SOFTWARE AND CONNECTIVITY OPTIONS

Catalog Number	Description	List Price
116750222-001	ConnectUPS-BD	$335

Bundled with Intelligent Power Software Suite CD and communication cable.

See software and connectivity product sections for more detail.

SPLIT-PHASE MODULE ASY-0673 RUNTIME CHART IN MINUTES (FULL LOAD/HALF LOAD)

Load (VA) Number of Strings (two battery modules per string; two battery modules occupy one slot)

	1 String	2 String	3 String	4 String	5 String	6 String	7 String	8 String	9 String	10 String	11 String	12 String
3 kVA	6.5/16	16/40	27.5/67.5	40/98	53.5/132	67.5/167	83/204	98/242	115/283	132/324	149/365	167/408
6 kVA		6.5/16	11/27.5	16/40	21.5/53.5	27.5/68	33.5/83	40/98	46.5/115	53.5/132	60.5/149	67.5/167
9 kVA			6.5/16	9.5/23.5	13/31.5	16/40	20/49	23.5/58	27.5/67.5	31.5/78	35.5/88	40/98
12 kVA				6.5/16	9/21.5	11/27.5	13.5/33.5	16/40	19/46.5	21.5/53.5	24.5/60.5	27.5/68
15 kVA					6.5/16	8/20.5	10/25	12/30	14/35	16/40	18.5/45	20.5/50.5
18 kVA						6.5/16	8/20	9.5/23.5	11/27.5	12.5/30	14.5/35.5	16/40

Note: Additional battery runtimes available up to 8 hr. Please contact your Eaton representative. Split-phase Module is for U.S. use.

	13 String	14 String	15 String	16 String	17 String	18 String	19 String	20 String	21 String	22 String	23 String	24 String
3 kVA	185/456	204/501	223/549	242/595	262/640	283/692	302/750	323/790	345/850	365/900	387/955	408/1015
6 kVA	75/185	83/204	90/223	98/242	106/262	115/285	123/302	132/324	140/345	149/365	157/388	167/408
9 kVA	44/109	49/120	53.5/132	58/143	63/154	68/167	73/179	78/191	83/204	88/210	93/229	98/242
12 kVA	30.5/75	33.5/83	37/90	40/98	43/106	46.5/115	50/123	53.5/132	57/140	60/149	64/157	68/167
15 kVA	23/56	25/62	27.5/67.5	30/73.5	32.5/79.5	35/86	37.5/92	40/98	42.5/105	45/111	48/118	51/124
18 kVA	18/44	20/49	21.5/53.5	23.5/58	25.5/63	27.5/68	29.5/73	31.5/78	33.5/83	35.5/88	38/93	40/98

Note: Battery strings above and to the right of the dark line require additional (N+X) power modules or a 20A charger module.

UNIVERSAL MODULE ASY-0674 RUNTIME CHART IN MINUTES (FULL LOAD/HALF LOAD)

Load (VA) Number of strings (two battery modules per string; two battery modules occupy one slot)

	1 String	2 String	3 String	4 String	5 String	6 String	7 String	8 String	9 String	10 String	11 String	12 String
3 kVA	8/24	24/59	43/95	58/140	80/175	95/125	119/240	135/290	155/335	165/365	200/395	215/450
6 kVA		8/24	16/40	24/59	32/83	40/103	49/114	58/140	69/156	83/175	90/190	103/205
9 kVA			8/24	13/35	18/46	24/59	29/63	35/86	40/103	46/115	54/125	58/140
12 kVA				8/24	13/33	16/40	19.5/43.5	24/59	29/70	33/80	36/90	41/100
15 kVA					8/24	11.5/31	14.5/31.5	18/46	20.5/51	24/58	28/66	31/73
18 kVA						8/24	11/31.5	13/36	15.5/41	18/45	20.5/51	24/58

Note: Additional battery runtimes available up to 8 hours. Please contact your Eaton representative.

	13 String	14 String	15 String	16 String	17 String	18 String	19 String	20 String	21 String	22 String	23 String	24 String
3 kVA	225/500	245/540	270/600	290/620	315/650	335/690	350/720	365/780	375/850	395/890	425/920	450/950
6 kVA	113/335	123/255	135/273	143/290	148/315	156/333	165/350	175/365	183/385	190/395	198/420	205/440
9 kVA	63/150	73/165	80/178	86/190	93/200	100/210	107/225	115/240	121/255	125/270	135/280	143/290
12 kVA	47/110	52/121	56/130	58/140	65/147	70/156	75/165	80/175	85/185	90/195	95/205	100/215
15 kVA	34/83	38/94	41.5/103	44.5/113	46.5/117	51/127	56/130	58/140	61/149	66/158	71/165	73/170
18 kVA	27/65	31.5/72	34.5/77	36/83	38/94	41/100	44/105	45/115	48/122	54/131	57/137	58/140

Battery strings above and to the right of the dark line require additional (N+X) power modules or a 20A charger module.

CUSTOMIZABLE INPUT PLUG OPTIONS[1]

Input Plug	Power Module Type	CTO Digit	List Price
L14-20P[2]	Split-phase	F	$109
L14-30P[3]	Split-phase	G	$129
14-50P[4]	Split-phase	H	$149

Notes: 1. May be configured to order by contacting sales support: 800.356.5794. 2. Limits chassis to maximum current of 16A and two power modules for 3 kVA redundant. 3. Limits chassis to maximum current of 24A and three power modules for 5 kVA redundant. 4. Limits chassis to maximum current of 40A and four power modules for 8 kVA redundant.

EATON 9170+ UPS RACK/TOWER

Powerware series *(continued)*

CUSTOMIZABLE RECEPTACLE OPTIONS

Output Receptacle	Power Module Type	# of Bays	CTO Digit		List Price
5-20R duplex	Split-phase	1	E	Maximum of three different types of receptacles per Enclosure Bays available per Enclosure: 3-slot has (4) bays 6-slot has (8) bays 9-slot has (8) bays 12-slot has (12) bays	$49
6-20R duplex	All	1	G		$69
L5-20R twist lock	Split-phase	1	K		$49
L5-30R twist lock	Split-phase	1	L		$59
L6-15R twist lock duplex	All	1	M		$79
L6-20R twist lock	All	1	N		$69
L6-30R twist lock	All	1	O		$69
L14-30R twist lock	Split-phase	1	R		$69
3 x 5-15R duplex	Split-phase	2	W		$69
3 x 5-20R duplex	Split-phase	2	X		$69

SERVICES

For detailed information on service plans, please refer to the Single-phase Service section on page 135.

EATON FERRUPS FE UPS 60 HZ
Powerware series



Ferroresonant UPS (500–3100 VA)

- Bulletproof power integrity and management for telecommunications and computer loads
- Special configurations and options available—call sales support for details: 800.356.5794
- Warranty (US and Canada): Two-year limited warranty and $250,000 load protection guarantee; optional Gold Plans available

The FERRUPS® can be customized with many options and runtimes. If you do not find the configuration you need in this price book, call 800.356.5794.



FERRUPS FE 60 Hz MODELS

CTO Number	Input/Output Voltage	Runtimes Full/Half Load	Input Plug	Output Receptacles	List Price
MODEL FE500 (500 VA/350W)					
FA000AA0A0A0A0A	120V/120V	9/25 min	Hardwire	Hardwire	$2,055
FA000BB2A0A0A0A	120V/120V	9/25 min	5-15	(4) 5-15	$2,014
FA010BB2A0A0A0A	120V/120V	20/56 min	5-15	(4) 5-15	$2,084
FA020BB2A0A0A0A	120V/120V	75/212 min	5-15	(4) 5-15	$2,233
MODEL FE700 (700 VA/500W)					
FB000AA0A0A0A0A	120V/120V	11/31 min	Hardwire	Hardwire	$2,306
FB000BB2A0A0A0A	120V/120V	11/31 min	5-15	(4) 5-15	$2,264
FB020BB2A0A0A0A	120V/120V	34/96 min	5-15	(4) 5-15	$2,471
FB040BB2A0A0A0A	120V/120V	External Battery	5-15	(4) 5-15	$2,158
Model FE850 (850 VA/600W)					
FC000AA0A0A0A0A	120V/120V	9/25 min	Hardwire	Hardwire	$2,568
FC000BB2A0A0A0A	120V/120V	9/25 min	5-15	(4) 5-15	$2,527
FC010BB2A0A0A0A	120V/120V	38/107 min	5-15	(4) 5-15	$2,641
Model FE1.15 (1.15 kVA/800W)					
FD000AA0A0A0A0A	120V/120V	8/22 min	Hardwire	Hardwire	$3,491
FD000BB3A0A0A0A	120V/120V	8/22 min	5-15	(6) 5-15	$3,449
FD010BB3A0A0A0A	120V/120V	30/85 min	5-15	(6) 5-15	$3,745
FD020BB3A0A0A0A	120V/120V	70/197 min	5-15	(6) 5-15	$3,843
Model FE1.4 (1.4 kVA/1 kW)					
FE000AA0A0A0A0A	120V/120V	11/31 min	Hardwire	Hardwire	$3,793
FE000BB3A0A0A0A	120V/120V	11/31 min	5-15	(6) 5-15	$3,751
FE010BB3A0A0A0A	120V/120V	22/62 min	5-15	(6) 5-15	$4,019
Model FE1.8 (1.8 kVA/1.25 kW)					
FF000CC3A0A0A0B	120V/120V	11/30 min	5-20	(6) 5-20	$5,379
FF010AA0A0A0A0B	120V/120V	86/206 min	Hardwire	Hardwire	$5,941
FF010CC3A0A0A0B	120V/120V	86/206 min	5-20	(6) 5-20	$5,899
Model FE2.1 (2.1 kVA/1.5 kW)					
FG000AA0A0A0A0B	120V/120V	9/25 min	Hardwire	Hardwire	$5,990
FG000CC3A0A0A0B	120V/120V	9/25 min	5-20	(6) 5-20	$5,948
FG010AA0A0A0A0B	120V/120V	66/163 min	Hardwire	Hardwire	$6,501
FG010CC3A0A0A0B	120V/120V	66/163 min	5-20	(6) 5-20	$6,460
Model FE3.1 (3.1 kVA/2.2 kW)					
FH000AA0A0A0A0B	120V/120V	14/35 min	Hardwire	Hardwire	$7,515
FH000JC3A0A0A0B	120V/120V	14/35 min	L5-30	(6) 5-20	$7,473
FH010AA0A0A0A0B	120V/120V	37/98 min	Hardwire	Hardwire	$7,974
FH010JC3A0A0A0B	120V/120V	37/98 min	L5-30	(6) 5-20	$7,933

Note: See following pages for external battery packs and maintenance bypass switches.

EATON FERRUPS FE UPS 60 HZ

Powerware series *(continued)*

Ferroresonant UPS (4.3–18 kVA)

- Bulletproof power integrity and management for telecommunications and computer loads
- Power factor-corrected, switch-mode and linear power supplies

The FERRUPS can be customized with many options and runtimes. If you do not find the configuration you need in this price book, call 800.356.5794.



FERRUPS FE 60 Hz MODELS *(continued)*

Model Number	CTO Number	Input/Output Voltage	Runtimes Full/Half Load	Input Plug	Output Receptacles	List Price
Model FE4.3 (4.3 kVA/3 kW)						
FE4.3 kVA	FI000AA0A0A0A0B	120V/120V	10/24 min	Hardwired	Hardwired	$11,125
FE4.3 kVA	FI100AA0A0A0A0B	208-208/120V	10/24 min	Hardwired	Hardwired	$10,846
FE4.3 kVA	FI300AA0A0A0A0B	240-240/120V	10/24 min	Hardwired	Hardwired	$10,846
Model FE5.3 (5.3 kVA/3.7 kW)						
FE5.3 kVA	FJ000AA0A0A0A0B	120V/120V	20/50 min	Hardwired	Hardwired	$12,643
FE5.3 kVA	FJ100AA0A0A0A0B	208-208/120V	20/50 min	Hardwired	Hardwired	$12,364
FE5.3 kVA	FJ300AA0A0A0A0B	240-240/120V	20/50 min	Hardwired	Hardwired	$12,364
Model FE7 (7 kVA/5 kW)						
FE7 kVA	FK000AA0A0A0A0B	120V/120V	12/33 min	Hardwired	Hardwired	$15,916
FE7 kVA	FK100AA0A0A0A0B	208-208/120V	12/33 min	Hardwired	Hardwired	$15,638
FE7 kVA	FK300AA0A0A0A0B	240-240/120V	12/33 min	Hardwired	Hardwired	$15,638
Model FE10 (10 kVA/7.5 kW)						
FE10 kVA	FL140AA0A0A0A0B	208-208/120V	External	Hardwired	Hardwired	$17,110
Recommended system options:	EBPS10F	Standard external battery pack (11/26 min)				$5,641
	BPE04BBM1A	External maintenance bypass switch (break-before-make)				$1,034
System List						$23,785
FE10 kVA	FL340AA0A0A0A0B	240-240/120V	External	Hardwired	Hardwired	$17,110
Recommended system options:	EBPS10F	Standard external battery pack (11/26 min)				$5,641
	BPE04MBB1A	External maintenance bypass switch (make-before-break)				$1,134
System List						$23,885
Model FE12.5 (12.5 kVA/10 kW)						
FE12.5 kVA	FM140AA0A0A0A0B	208-208/120V	External	Hardwired	Hardwired	$18,269
Recommended system options:	EBPS12F	Standard external battery pack (18/48 min)				$7,787
	BPE04BBM1A	External maintenance bypass switch (break-before-make)				$1,034
System List						$27,090
FE12.5 kVA	FM340AA0A0A0A0B	240-240/120V	External	Hardwired	Hardwired	$18,269
Recommended system options:	EBPS12F	Standard external battery pack (18/48 min)				$7,787
	BPE04MBB1A	External maintenance bypass switch (make-before-break)				$1,134
System List						$27,190
Model FE18 (18 kVA/15 kW)						
FE18 kVA	FN140AA0A0A0A0B	208-208/120V	External	Hardwired	Hardwired	$23,501
Recommended system options:	EBPS18F	Standard external battery pack (10/26 min)				$7,787
	BPE05BBM1A	External maintenance bypass switch (break-before-make)				$1,274
System List						$32,562
FE18 kVA	FN340AA0A0A0A0B	240-240/120V	External	Hardwired	Hardwired	$23,501
Recommended system options:	EBPS18F	Standard external battery pack (10/26 min)				$7,787
	BPE05MBB1A	External maintenance bypass switch (make-before-break)				$1,430
System List						$32,718

Note: See following pages for external battery packs and maintenance bypass switches. Call for other configurations and options.

EATON FERRUPS UPS RACK SERIES 60 HZ

Powerware series

Ferroresonant UPS (1.4 kVA–7 kVA)

- Bulletproof power integrity and management for telecommunications and computer loads
- Power factor-corrected, switch-mode and linear power supplies
- High reliability for industrial and harsh environment
- Ultra-high reliability for standard, commercial environment

The FERRUPS can be customized with many options and runtimes. If you do not find the configuration you need in this price book, call 800.356.5794.



FERRUPS RACK SERIES 60 Hz MODELS

CTO Number	Input/Output Voltage	Runtimes Full/Half Load	Input Plug	Output Receptacles	List Price
Model FES1.4 (1.4 kVA/1 kW)					
RC000BB2A0A0A0A	120V–120V	14/36 min	5-15	(4) 5-15	$7,354
RC000AA0A0A0A0A	120V–120V	14/36 min	Hardwired	Hardwired	$7,230
Model FER2.1 (2.1 kVA/1.5 kW)					
RH000CC3A0A0A0B	120V–120V	24/58 min	5-20	(6) 5-20	$8,424
RH000AA0A0A0A0B	120V–120V	24/58 min	Hardwired	Hardwired	$8,206
Model FER3.1 (3.1 kVA/2.2 kW)					
RI000JB3A0A0A0B	120V–120V	14/35 min	L5-30	(6) 5-15	$9,264
RI000AA0A0A0A0B	120V–120V	14/35 min	Hardwired	Hardwired	$9,002
Model FER7 (7 kVA/5 kW)					
RK140AA0A0A0A0B	208–120/208V	External Battery	Hardwired	Hardwired	$17,077
RK340AA0A0A0A0B	240–120/240V	External Battery	Hardwired	Hardwired	$17,077
EBPS4.3R	Standard external battery pack (12/33 min)				$4,798

Note: See following pages for external battery packs and maintenance bypass switches. Call for other configurations and options.

SOFTWARE AND CONNECTIVITY OPTIONS

Description	Part Number	List Price
Serial CheckUPS Cable DB25M to DB9F	INT-0035	$63
BestLink Web/SNMP Adapter (external)	116750225-001	$349
IBM AS/400 Kit Standard Cable Kit	IPK-0001	$124
Handheld Remote and Keypad (FE, FES, FER models only)	RCK-0007	$402
Caster Assy	CAA-0006	$189

SERVICES

For detailed information on service plans, please refer to the Single-phase Service section on page 135.

EATON FERRUPS UPS EXTERNAL OPTIONS & ACCESSORIES

Powerware series

FERRUPS EXTERNAL BATTERY PACK BACKUP TIMES (full/half load)

FERRUPS external battery packs offer extended backup times. Please see following pages for typical backup times. Use of the external battery packs require that the FERRUPS UPS be configured with external battery or battery charger options as noted below.

Tower: 1.4–3.1 kVA

Battery Pack	List Price	FE1.15 kVA	FE1.4 kVA	FE1.8 kVA	FE2.1 kVA	FE3.1 kVA
8ME	$3,773	3h 15m / 9h 11m	2h 20m / 6h 35m	-	-	-
9ME	$4,120	3h 50m / 10h 50m	3h 10m / 8h 57m	2h 12m / 4h 53m	1h 41m / 3h 54m	57m / 2h 27m
10ME	$7,082	6h 30m / 18h 23m	5h 20m / 15h 5m	3h 38m / 8h 22m	2h 50m / 6h 37m	1h 41m / 4h 03m
11ME	$7,844	-	-	5h 09m / 11h 30m	4h 03m / 9h 10m	2h 29m / 5h 44m
12ME[1]	$10,436	-	-	6h 07m / 14h 06m	4h 46m / 11h 08m	2h 52m / 6h 50m
13ME[1]	$12,740	-	-	8h 30m / 18h 53m	6h 42m / 15h 04m	4h 07m / 9h 27m
14ME[1]	$15,636	-	-	12h 08m / 27h 06m	9h 33m / 21h 36m	5h 52m / 13h 30m
15ME[1]	$21,143	-	-	18h 52m / 44h 45m	15h 12m / 36h 28m	9h 41m / 22h 18m

Tower: 4.3–7 kVA

Battery Pack	List Price	FE4.3 kVA	FE5.3 kVA	FE7 kVA
1FE	$5,089	40m / 1h 42m	27m / 1h 14m	-
2FE	$7,128	1h 11m / 2h 51m	49m / 2h 10m	34m / 1h 28m
3FE	$7,900	1h 49m / 4h 05m	1h 12m / 3h 08m	48m / 2h 13m
4FE[2]	$10,531	2h 06m / 4h 46m	1h 27m / 3h 39m	60m / 2h 33m
5FE[2]	$12,871	3h 04m / 6h 46m	2h 13m / 5h 11m	1h 32m / 3h 41m
6FE[3]	$15,493	4h 27m / 9h 39m	3h 08m / 7h 22m	2h 16m / 5h 14m
7FE[3]	$21,397	7h 12m / 15h 56m	5h 10m / 12h 10m	3h 45m / 8h 39m

Tower: 10–18 kVA

Battery Pack	List Price	FE10 kVA	FE12.5 kVA	Battery Pack	List Price	FE18 kVA
EBPS10F	$5,641	11m / 26 m	-	EBPS18F	$7,787	10m / 26m
EBPS12F	$7,787	-	18m / 48m	16FE	$9,716	14m / 39m
8FE	$7,833	27m / 1h 10m	-	17FE	$14,916	27m / 1h 10m
9FE	$10,323	41m / 1h 48m	27m / 1h 13m	18FE	$16,043	37m / 1h 46m
10FE	$15,718	1h 13m / 2h 59m	49m / 2h 07m	19FE[3]	$22,488	48m / 2h 04m
11FE	$17,249	1h 51m / 4h 16m	1h 12m / 3h 04m	20FE[3]	$29,555	1h 13m / 3h 01m
12FE[2]	$23,407	2h 09m / 5h 02m	1h 38m / 4h 05m	21FE[3]	$33,690	1h 49m / 4h 17m
13FE[2]	$29,848	3h 07m / 7h 04m	2h 12m / 5h 05m	22FE[3]	$50,374	3h 04m / 7h 05m
14FE[3]	$34,658	4h 26m / 10h 04m	3h 08m / 7h 14m			
15FE[3]	$50,346	7h 20m / 16h 38m	5h 10m / 11h 57m			

Rackmount: 2.1–7 kVA

Battery Pack	List Price	FER2.1 kVA	FER3.1 kVA	FER7 kVA
1RE	$4,883	1h 41m / 3h 54m	57m / 2h 27m	-
2RE	$8,474	2h 50m / 6h 37m	1h 41m / 4h 03m	-
EBPS4.3R	$4,798	-	-	12m / 33m

1. Requires FERRUPS UPS to be configured with optional 15 Amp battery charger.
2. Requires FERRUPS UPS to be configured with optional 10 Amp battery charger.
3. Requires FERRUPS UPS to be configured with optional 20 Amp battery charger.

Note: Backup times are approximate and vary with equipment, configuration, battery age, temperature etc.

EATON FERRUPS UPS EXTERNAL OPTIONS & ACCESSORIES

Powerware series *(continued)*

MAINTENANCE BYPASS SWITCHES

Part Number	Description	Application	List Price
BPE01MBB1A	BPE01 Make-Before-Break Maintenance Bypass Switch	For use with: FE500 VA–2.1 kVA with 120V input FE3.1 kVA with 120 V input and standard charger	$631
BPE02BBM1A	BPE02 Break-Before-Make Maintenance Bypass Switch	For use with: FE500 VA–7 kVA with 208V or 220V input	$865
BPE02MBB1A	BPE02 Make-Before-Break Maintenance Bypass Switch	For use with: FE3.1 kVA with 120V input and 15 Amp charger FE4.3 kVA with 120V input FE500 VA–FE7 kVA with 240V input	$865
BPE04BBM1A	BPE04 Break-Before-Make Maintenance Bypass Switch	For use with: FE10 kVA–12.5 kVA with 208V input	$1,034
BPE04MBB1A	BPE04 Make-Before-Break Maintenance Bypass Switch	For use with: FE5.3 kVA–7 kVA with 120V input FE10 kVA–FE12.5 kVA with 240V input	$1,144
BPE05MBB1A	BPE05 Make-Before-Break Maintenance Bypass Switch	For use with: FE18 kVA with 240V input	$1,430
BPE05BBM1A	BPE05 Break-Before-Make Maintenance Bypass Switch	For use with: FE18 kVA with 208V input	$1,274

Note: See FERRUPS CTO Configuration Guides for additional external maintenance bypass switch options.

SPARE PARTS KITS[1]

Application	Low Voltage Part Number	High Voltage Part Number	List Price
FE500VA 60 Hz Tower	SPK-FALV	-	call
FE700VA 60 Hz Tower	SPK-FBLV	-	call
FE850VA 60 Hz Tower	SPK-FCLV	SPK-FCHV	call
FE1.15kVA 60 Hz Tower	SPK-FDLV	SPK-FDHV	call
FE1.4kVA 60 Hz Tower	SPK-FELV	SPK-FEHV	call
FE1.8kVA 60 Hz Tower	SPK-FFLV	SPK-FFHV	call
FE2.1kVA 60 Hz Tower	SPK-FGLV	SPK-FGHV	call
FE3.1kVA 60 Hz Tower	SPK-FHLV	SPK-FHHV	call
FE4.3kVA 60 Hz Tower, with 5 Amp Battery Charger	SPK-FILV-5A	SPK-FIHV-5A	call
FE4.3kVA 60 Hz Tower, with 10 Amp Battery Charger	SPK-FILV-10A	SPK-FIHV-10A	call
FE4.3kVA 60 Hz Tower, with 20 Amp Battery Charger	SPK-FILV-20A	SPK-FIHV-20A	call
FE5.3kVA 60 Hz Tower, with 5 Amp Battery Charger	SPK-FJLV-5A	SPK-FJHV-5A	call
FE5.3kVA 60 Hz Tower, with 10 Amp Battery Charger	SPK-FJLV-10A	SPK-FJHV-10A	call
FE5.3kVA 60 Hz Tower, with 20 Amp Battery Charger	SPK-FJLV-20A	SPK-FJHV-20A	call
FE7kVA 60 Hz Tower, with 5 Amp Battery Charger	SPK-FKLV-5A	SPK-FKHV-5A	call
FE7kVA 60 Hz Tower, with 10 Amp Battery Charger	SPK-FKLV-10A	SPK-FKHV-10A	call
FE7kVA 60 Hz Tower, with 20 Amp Battery Charger	SPK-FKLV-20A	SPK-FKHV-20A	call
FE10kVA 60 Hz Tower, with 5 Amp Battery Charger	-	SPK-FLHV-5A	call
FE10kVA 60 Hz Tower, with 10 Amp Battery Charger	-	SPK-FLHV-10A	call
FE10kVA 60 Hz Tower, with 20 Amp Battery Charger	-	SPK-FLHV-20A	call
FE12.5kVA 60 Hz Tower, with 5 Amp Battery Charger	-	SPK-FMHV-5A	call
FE12.5kVA 60 Hz Tower, with 10 Amp Battery Charger	-	SPK-FMHV-10A	call
FE12.5kVA 60 Hz Tower, with 20 Amp Battery Charger	-	SPK-FMHV-20A	call
FE18kVA 60 Hz Tower, with 5 Amp Battery Charger	-	SPK-FNHV-5A	call
FE18kVA 60 Hz Tower, with 10 Amp Battery Charger	-	SPK-FNHV-10A	call
FE18kVA 60 Hz Tower, with 20 Amp Battery Charger	-	SPK-FNHV-20A	call
FES850VA 60 Hz rack	SPK-RALV	SPK-RAHV	call
FES1.4kVA 60 Hz rack	SPK-RCLV	-	call
FER or FES2.1kVA 60 Hz rack	SPK-RHLV	-	call
FER or FES3.1kVA 60 Hz rack	-	SPK-RIHV	call
FER7kVA 60 Hz rack, with 5 Amp Battery Charger	SPK-RKLV-5A	SPK-RKHV-5A	call
FER7kVA 60 Hz rack, with 10 Amp Battery Charger	SPK-RKLV-10A	SPK-RKHV-10A	call

1. Spare parts kits must be ordered at time of FERRUPS UPS order.

EATON BLADEUPS

An Eaton Green Solution

EATON TAA COMPLIANT

Multi-mode three-phase rack mount UPS (5 to 60kW N+1)

The Eaton BladeUPS is a revolutionary power quality solution, expanding power protection from 5 kW to 60 kW in a single industry standard 19-inch rack, and, most significantly, providing this robust, compact solution without generating the additional heat associated with legacy end-of-row, modular UPS products.

- Achieves the highest power density in the marketplace
- Requires only six rack units (6U) per unit
- Reduces single points of failure with an intelligent bypass design that eliminates human error
- Provides the ultimate in reliability through a peer-to-peer paralleling relationship



BLADEUPS (5 to12 kW) MODELS: 208V

Description	Style Number	Rating	Input/Output Voltage	Dimensions (H x W x D, inches)	Weight[1] (lb)	List Price
BladeUPS 12 kW 208V w/60A 5W in/5W out	ZC1212200100000	12 kVA (12 kW)	208/208	10.5 (6U) x 17.3 x 28.0	322	$11,500
BladeUPS 12 kW 208V w/60A 5W in/4W out	ZC1212600100000	12 kVA (12 kW)	208/208	10.5 (6U) x 17.3 x 28.0	321	$11,500
BladeUPS 12 kW 208V w/60A 5W in/RPM ONLY	ZC1212000100000	12 kVA (12 kW)	208/208	10.5 (6U) x 17.3 x 28.0	321	$11,300
BladeUPS 12 kW 208V w/parallel cord	ZC121P060100000	12 kVA (12 kW)	208/208	10.5 (6U) x 17.3 x 28.0	311	$11,500
BladeUPS 12 kW 208V w/60A 5W in/5W out w/Power Xpert SNMP/ModBus	ZC1212208100000	12 kVA (12 kW)	208/208	10.5 (6U) x 17.3 x 28.0	322	$11,950
BladeUPS 12 kW 208V w/60A 5W in/4W out w/Power Xpert SNMP/ModBus	ZC1212608100000	12 kVA (12 kW)	208/208	10.5 (6U) x 17.3 x 28.0	321	$11,950
BladeUPS 12 kW 208V w/60A 5W in/RPM ONLY w/Power Xpert SNMP/ModBus	ZC1212008100000	12 kVA (12 kW)	208/208	10.5 (6U) x 17.3 x 28.0	321	$12,345
BladeUPS 12 kW 208V w/parallel cord w/Power Xpert SNMP/ModBus	ZC121P068100000	12 kVA (12 kW)	208/208	10.5 (6U) x 17.3 x 28.0	311	$11,950
BladeUPS 8 kW 208V w/ NEMA L21-30P in / L21-30R out	ZC0811100100000	8 kVA (8 kW)	208/208	10.5 (6U) x 17.3 x 28.0	311	$8,350
BladeUPS 8 kW 208V w/ NEMA L21-30P in / L21-30R out w/Power Xpert SNMP/Modbus	ZC0811108100000	8 kVA (8 kW)	208/208	10.5 (6U) x 17.3 x 28.0	311	$8,800
BladeUPS 5kW 208V w/NEMA L21-20P in /L21-20R out, 1 Int batt string	ZC0517700110000	5kVA (5kW)	208/208	10.5 (6U) x 17.3 x 28.0	218	$6,900
BladeUPS 5kW 208V w/NEMA L21-20P in /L21-20R out, 1 Int batt string w/PXGX SNMP/ModBus	ZC0517708110000	5kVA (5kW)	208/208	10.5 (6U) x 17.3 x 28.0	218	$7,350
BladeUPS 5kW 208V w/NEMA L21-20P in /L21-20R out, 2 Int batt string	ZC0517700100000	5kVA (5kW)	208/208	10.5 (6U) x 17.3 x 28.0	308	$7,500
BladeUPS 5kW 208V w/NEMA L21-20P in /L21-20R out, 2 Int batt string w/PXGX SNMP/ModBus	ZC0517708100000	5kVA (5kW)	208/208	10.5 (6U) x 17.3 x 28.0	308	$7,950

1. All weights are installed weight, add 80 lb to determine shipping weight
2. 5W in (wired input plug) is model IEC309-60 CH560P9W or similar
3. 5W out (output connector) is model IEC309-60 CH560C9W or similar
4. 4W out (output connector) is model IEC309-60 CH460C9W or similar

BLADEUPS (12 kW) MODELS: 400V

Description	Style Number	Rating	Input/Output Voltage	Dimensions (H x W x D, inches)	Weight[1] (lb)	List Price
BladeUPS 12 kW 400V w/IEC 309-32A 5W in/5W out	ZC1224400100000	12 kVA (12 kW)	400/400	10.5 (6U) x 17.3 x 28.0	318	$11,500
BladeUPS 12kW 400V w/IEC 309-32A 5W in/5W out w/PXGX SNMP/ModBus	ZC1224408100000	12 kVA (12 kW)	400/400	10.5 (6U) x 17.3 x 28.0	314	$11,950
BladeUPS 12 kW 400V w/IEC 309-32A 5W in/ RPM ONLY out	ZC1224000100000	12 kVA (12 kW)	400/400	10.5 (6U) x 17.3 x 28.0	317	$11,300
BladeUPS 12kW 400V w/IEC 309-32A 5W in/ RPM ONLY out w/PXGX SNMP/ModBus	ZC1224008100000	12 kVA (12 kW)	400/400	10.5 (6U) x 17.3 x 28.0	318	$11,750
BladeUPS 12 kW 400V w/parallel cord	ZC122P060100000	12 kVA (12 kW)	400/400	10.5 (6U) x 17.3 x 28.0	314	$11,500
BladeUPS 12kW 400V w/parallel cord w/PXGX SNMP/ModBus	ZC122P068100000	12 kVA (12 kW)	400/400	10.5 (6U) x 17.3 x 28.0	317	$11,950

1. All weights are installed weight, add 80 lb to determine shipping weight
2. 5W in (wired input plug) is model IEC309-32 CH532P6W or similar
3. 5W out (output connector) in model IEC309-32 CH532C6W or similar

Note: BladeUPS EBMs are not TAA Compliant

EATON BLADEUPS *(continued)*

BUILT-IN CONNECTIVITY OPTIONS

Option	Select digit "8" in the Style Number	Value for Style Number digit 8	Price Adder
X-Slot 2	Standard Relay Card (<60 Vac rated, IBM AS/400)	3	$146
	Industrial Relay Card (5A @ 250 Vac)	4	$335
	Hot Sync CAN Bridge Card	6	$519
Option	**Select digit "9" in the Style Number**	**Value for Style Number digit 9**	**Price Adder**
X-Slot 1	Standard Relay Card (<60 Vac rated, IBM AS/400)	3	$146
	Industrial Relay Card (5A @ 250 Vac)	4	$335
	Power Xpert Gateway UPS Card (Web/SNMP/ModBusTCP)	8	$450

Note: All parallel configured systems include a Hot Sync CAN Bridge card in the standard part number

BLADEUPS (12–60 kW) MODELS: PRE-ASSEMBLED SYSTEMS IN S-SERIES RACK

Factory Installed and Tested UPS Systems in Eaton 42U Rack

Description	Style Number	Rating	Input/Output Voltage	Dimensions[1] (H x W x D, inches)	Weight[2] (lb)	List Price
BladeUPS Pre-Assembled Bottom Entry 12 kW, 208V	ZP21110XXXXX000	12 kVA (12 kW)	208/208	81.0 x 24.0 x 42.0	683	$17,000
BladeUPS Pre-Assembled Bottom Entry 12 kW, 208V w/(1) Power Xpert SNMP/ModBus	ZP21115XXXXX000	12 kVA (12 kW)	208/208	81.0 x 24.0 x 42.0	683	$17,450
BladeUPS Pre-Assembled Bottom Entry 24 kW, 208V	ZP212100XXXX000	24 kVA (24 kW)	208/208	81.0 x 24.0 x 42.0	994	$28,000
BladeUPS Pre-Assembled Bottom Entry 24 kW, 208V w/(1) Power Xpert SNMP/ModBus	ZP212150XXXX000	24 kVA (24 kW)	208/208	81.0 x 24.0 x 42.0	994	$28,450
BladeUPS Pre-Assembled Bottom Entry 36 kW, 208V	ZP2131000XXX000	36 kVA (36 kW)	208/208	81.0 x 24.0 x 42.0	1316	$38,000
BladeUPS Pre-Assembled Bottom Entry 36 kW, 208V w/(1) Power Xpert SNMP/ModBus	ZP2131500XXX000	36 kVA (36 kW)	208/208	81.0 x 24.0 x 42.0	1316	$38,450
BladeUPS Pre-Assembled Bottom Entry 48 kW, 208V	ZP21410000XX000	48 kVA (48 kW)	208/208	81.0 x 24.0 x 42.0	1638	$46,500
BladeUPS Pre-Assembled Bottom Entry 48 kW, 208V w/(1) Power Xpert SNMP/ModBus	ZP21415000XX000	48 kVA (48 kW)	208/208	81.0 x 24.0 x 42.0	1638	$46,950
BladeUPS Pre-Assembled Bottom Entry 60 kW, 208V	ZP215100000X000	60 kVA (60 kW)	208/208	81.0 x 24.0 x 42.0	1960	$58,000
BladeUPS Pre-Assembled Bottom Entry 60 kW, 208V w/(1) Power Xpert SNMP/ModBus	ZP215150000X000	60 kVA (60 kW)	208/208	81.0 x 24.0 x 42.0	1960	$58,950
BladeUPS Pre-Assembled Bottom Entry 60 kW N+1, 208V	ZP2161000000000	60 kVA (60 kW) N+1	208/208	81.0 x 24.0 x 42.0	2282	$70,000
BladeUPS Pre-Assembled Bottom Entry 60 kW N+1, 208V w/(1) Power Xpert SNMP/ModBus	ZP2161500000000	60 kVA (60 kW) N+1	208/208	81.0 x 24.0 x 42.0	2282	$70,450
BladeUPS Pre-Assembled Top Entry 12 kW, 208V	ZP22110XXXXX000	12 kVA (12 kW)	208/208	81.0 x 24.0 x 42.0	683	$17,000
BladeUPS Pre-Assembled Top Entry 12 kW, 208V, w/Power Xpert SNMP/ModBus	ZP22115XXXXX000	12 kVA (12 kW)	208/208	81.0 x 24.0 x 42.0	683	$17,450
BladeUPS Pre-Assembled Top Entry 24 kW, 208V	ZP222100XXXX000	24 kVA (24 kW)	208/208	81.0 x 24.0 x 42.0	994	$28,000
BladeUPS Pre-Assembled Top Entry 24 kW, 208V, w/Power Xpert SNMP/ModBus	ZP222150XXXX000	24 kVA (24 kW)	208/208	81.0 x 24.0 x 42.0	994	$28,450
BladeUPS Pre-Assembled Top Entry 36 kW, 208V	ZP2231000XXX000	36 kVA (36 kW)	208/208	80.0 x 24.0 x 42.0	1316	$38,000
BladeUPS Pre-Assembled Top Entry 36 kW, 208V, w/Power Xpert SNMP/ModBus	ZP2231500XXX000	36 kVA (36 kW)	208/208	80.0 x 24.0 x 42.0	1316	$38,450
BladeUPS Pre-Assembled Top Entry 48 kW, 208V	ZP22410000XX000	48 kVA (48 kW)	208/208	81.0 x 24.0 x 42.0	1638	$46,500
BladeUPS Pre-Assembled Top Entry 48 kW, 208V, w/Power Xpert SNMP/ModBus	ZP22415000XX000	48 kVA (48 kW)	208/208	81.0 x 24.0 x 42.0	1638	$46,950
BladeUPS Pre-Assembled Top Entry 60 kW, 208V	ZP225100000X000	60 kVA (60 kW)	208/208	81.0 x 24.0 x 42.0	1960	$58,000
BladeUPS Pre-Assembled Top Entry 60 kW, 208V, w/Power Xpert SNMP/ModBus	ZP225150000X000	60 kVA (60 kW)	208/208	81.0 x 24.0 x 42.0	1960	$58,950
BladeUPS Pre-Assembled Top Entry 60 kW N+1, 208V	ZP2261000000000	60 kVA (60 kW) N+1	208/208	81.0 x 24.0 x 42.0	2282	$70,000
BladeUPS Pre-Assembled Top Entry 60 kW N+1, 208V, w/Power Xpert SNMP/ModBus	ZP2261500000000	60 kVA (60 kW) N+1	208/208	81.0 x 24.0 x 42.0	2282	$70,450

1. Shipping dimensions are 87"H x 37"W x 60"D. If more than 4 units are installed batteries for 5th and 6th units will ship on a separate pallet maximum 15"H x 32"W x 48"D. Total shipping weight for configurations of 4 UPS modules or less is installed weight plus 345 lbs. For configurations of 5 or 6 UPS modules add 391 lbs. to installed weight.

Additional notes: Factory-installed connectivity for Pre-Assembled Systems: Style Number digits 7 thru 12 (based in number of systems installed) represent the communication card(s) installed in the system. 0 = No connectivity, 2 = ModBus RTU, 3 = Standard relay card, 4 = Industrial relay card, 5 = Power Xpert Gateway UPS Card For systems with more than one UPS module, additional cards can be installed. Please visit the Connectivity Products section for card information, including pricing.

EATON BLADEUPS *(continued)*

BLADEUPS (12–48 kW) MODELS: PRE-ASSEMBLED SYSTEMS IN S-SERIES RACK

Factory Installed and Tested UPS Systems in Eaton 42U Rack. System capable of expansion to maximum of 48kW

Description	Style Number	Rating	Input/Output Voltage	Dimensions[1] (H x W x D, inches)	Weight[2] (lb)	List Price
BladeUPS Pre-Assembled Bottom Entry 12 kW, 208V	ZP23110XXXXX000	12 kVA (12 kW)	208/208	81.0 x 24.0 x 42.0	661	$16,000
BladeUPS Pre-Assembled Bottom Entry 12 kW, 208V w/(1) Power Xpert SNMP/ModBus	ZP23115XXXXX000	12 kVA (12 kW)	208/208	81.0 x 24.0 x 42.0	661	$16,450
BladeUPS Pre-Assembled Bottom Entry 24 kW, 208V	ZP232100XXXX000	24 kVA (24 kW)	208/208	81.0 x 24.0 x 42.0	972	$27,000
BladeUPS Pre-Assembled Bottom Entry 24 kW, 208V w/(1) Power Xpert SNMP/ModBus	ZP232150XXXX000	24 kVA (24 kW)	208/208	81.0 x 24.0 x 42.0	972	$27,450
BladeUPS Pre-Assembled Bottom Entry 36 kW, 208V	ZP2331000XXX000	36 kVA (36 kW)	208/208	81.0 x 24.0 x 42.0	1294	$37,000
BladeUPS Pre-Assembled Bottom Entry 36 kW, 208V w/(1) Power Xpert SNMP/ModBus	ZP2331500XXX000	36 kVA (36 kW)	208/208	81.0 x 24.0 x 42.0	1294	$37,450
BladeUPS Pre-Assembled Bottom Entry 48 kW, 208V	ZP23410000XX000	48 kVA (48 kW)	208/208	81.0 x 24.0 x 42.0	1616	$45,500
BladeUPS Pre-Assembled Bottom Entry 48 kW, 208V w/(1) Power Xpert SNMP/ModBus	ZP23415000XX000	48 kVA (48 kW)	208/208	81.0 x 24.0 x 42.0	1616	$45,950
BladeUPS Pre-Assembled Top Entry 12 kW, 208V	ZP24110XXXXX000	12 kVA (12 kW)	208/208	81.0 x 24.0 x 42.0	661	$16,000
BladeUPS Pre-Assembled Top Entry 12 kW, 208V, w/Power Xpert SNMP/ModBus	ZP24115XXXXX000	12 kVA (12 kW)	208/208	81.0 x 24.0 x 42.0	661	$16,450
BladeUPS Pre-Assembled Top Entry 24 kW, 208V	ZP242100XXXX000	24 kVA (24 kW)	208/208	81.0 x 24.0 x 42.0	972	$28,595
BladeUPS Pre-Assembled Top Entry 24 kW, 208V, w/Power Xpert SNMP/ModBus	ZP242150XXXX000	24 kVA (24 kW)	208/208	81.0 x 24.0 x 42.0	972	$27,450
BladeUPS Pre-Assembled Top Entry 36 kW, 208V	ZP2431000XXX000	36 kVA (36 kW)	208/208	80.0 x 24.0 x 42.0	1294	$37,000
BladeUPS Pre-Assembled Top Entry 36 kW, 208V, w/Power Xpert SNMP/ModBus	ZP2431500XXX000	36 kVA (36 kW)	208/208	80.0 x 24.0 x 42.0	1294	$37,450
BladeUPS Pre-Assembled Top Entry 48 kW, 208V	ZP24410000XX000	48 kVA (48 kW)	208/208	81.0 x 24.0 x 42.0	1616	$45,500
BladeUPS Pre-Assembled Top Entry 48 kW, 208V, w/Power Xpert SNMP/ModBus	ZP24415000XX000	48 kVA (48 kW)	208/208	81.0 x 24.0 x 42.0	1616	$45,950

1. Shipping dimensions are 87"H x 37"W x 60"D. If more than 4 units are installed batteries for 5th and 6th units will ship on a separate pallet maximum 15"H x 32"W x 48"D. Total shipping weight for configurations of 4 UPS modules or less is installed weight plus 345 lbs. For configurations of 5 or 6 UPS modules add 391 lbs. to installed weight.

Additional notes: Factory-installed connectivity for Pre-Assembled Systems: Style Number digits 7 thru 12 (based in number of systems installed) represent the communication card(s) installed in the system. 0 = No connectivity, 2 = ModBus RTU, 3 = Standard relay card, 4 = Industrial relay card, 5 = Power Xpert Gateway UPS Card For systems with more than one UPS module, additional cards can be installed. Please visit the Connectivity Products section for card information, including pricing.

BLADEUPS ASSEMBLIES

Description	Style Number	Part Number	Nominal Voltage	Dimensions (H x W x D, inches)	Weight (lb)	List Price
S-Series Rack with 48kW BladeUPS Parallel bar Top w/wireway	P-103000505	ETN-BLADERACK4T	208V or 400V	81.0 x 24.0 x 42.0	452	$5,800
S-Series Rack with 48kW BladeUPS Parallel bar Bottom w/wireway	P-103000506	ETN-BLADERACK4B	208V or 400V	81.0 x 24.0 x 42.0	452	$5,800
S-Series Rack with 60kW BladeUPS Parallel bar Top w/wireway	P-103000503	ETN-BLADERACK6T	208V or 400V	81.0 x 24.0 x 42.0	466	$6,400
S-Series Rack with 60kW BladeUPS Parallel bar Bottom w/wireway	P-103000504	ETN-BLADERACK6B	208V or 400V	81.0 x 24.0 x 42.0	466	$6,400

EATON BLADEUPS *(continued)*

BLADEUPS OPTIONS

Description	Style Number	Dimensions (H x W x D, inches)	Weight (lb)	List Price
Extended Battery Modules				
BladeUPS 3U EBM[1,2]	103005747-6591	5.2 (3U) x 17.2 x 26.0	170	$1,745
S-Series Rack (Used to install extra EBMs or MBM)				
S-Series 42Ux24"x42" w/Side Panels, Castors	ETN-ENC422442SB	80.5 (42U) x 24 x 42	2,200	$2,993
S-Series 42Ux24"x42" w/divider, Castors	ETN-ENC422442S	80.5 (42U) x 24 x 42	2,200	$2,520
Extension Cable				
BladeUPS 3 Ft EBM Extension Cable	103006348-001	2.4 x 8.5 x 9.7	2	$250

1. Shipped on pallet with dimensions of 5x40x48. Up to 8 EBMS can be shipped stacked on the same pallet. Contact Customer Care for more information.
2. BladeUPS EBMs are not TAA Compliant

Maintenance Bypass				
BladeUPS Maintenance Bypass Module, 208V	103007415-5208	10.5 (6U) x 17.3 x 29.6	76	$6,000
BladeUPS Maintenance Bypass Module, 400V	103007415-5400	10.5 (6U) x 17.3 x 29.6	76	$6,000
UPS Paralleling				
BladeUPS 60 kW Bus Bar, Bottom Entry	103007571-5591[1,2]	71.9 x 6.0 x 5.7	54	$3,600
BladeUPS 60 kW Bus Bar, Top Entry	103007573-5591[1,2]	71.9 x 6.0 x 5.7	54	$3,600
BladeUPS 60 kW Universal Wireway	103007569-5591[1,2]	10.4 (6U) x 19.0 x 34.0	45	$1,200
BladeUPS 48 kW BusBar, Top Entry	103007828-5591[1,2]	51.0 x 6.0 x 5.7	40	$3,000
BladeUPS 48 kW BusBar, Bottom Entry	103007830-5591[1,2]	51.0 x 6.0 x 5.7	40	$3,000

1. Additional assembly services (Part Number AS00N00-Wire) required for field installation of busbar assemblies. See service section for pricing
2. Please consult Application Engineering when purchasing this item.
3. All bus bar assemblies are rated for 208 or 400V installations.
4. Add 15 lbs for shipping material

Distribution Options

See ePDU options in the Eaton Power Distribution and Enclosures section of this book.

SOFTWARE AND CONNECTIVITY OPTIONS

Bundled with Intelligent Power Software Suite CD and communication cable. See the software and connectivity product sections for more detail.

BLADEUPS 12 kW BATTERY BACKUP TIMES (in minutes)

Load (kW)	%	Internal Battery	+1 EBM	+2 EBMs	+3 EBMs	+4 EBMs
2	17	44.0	85	137	199	258
3	25	30.4	56	89	128	165
4	33	23.0	42	66	94	120
5	42	18.5	33	51	73	94
6	50	13.6	27	42	60	76
7	58	10.7	23	32	50	64
8	67	8.7	18	28	43	55
9	75	7.3	15	24	38	48
10	83	6.2	13	22	33	42
11	92	5.4	10.9	20	30	38
12	100	4.7	9.5	17	27	34

Note: Backup times are approximate and may vary with equipment, configuration, battery age, temperature, etc.

BLADEUPS 8 kW BATTERY BACKUP TIMES (in minutes)

Load (kW)	%	Internal Battery	+1 EBM	+2 EBMs	+3 EBMs	+4 EBMs
2	25	44.0	85	137	199	258
3	38	30.4	56	89	128	165
4	50	23.0	42	66	94	120
5	63	18.5	33	51	73	94
6	75	13.6	27	42	60	76
7	88	10.7	23	32	50	64
8	100	8.7	18	28	43	55

BLADEUPS 5 kW BATTERY BACKUP TIMES (2 INTERNAL STRINGS) (in minutes)

Load (kW)	%	Internal 2 String	+1 EBM	+2 EBMs	+3 EBMs	+4 EBMs
2.5	50	36.0	85	137	199	258
3	60	30.4	56	89	128	165
4	80	23.0	42	66	94	120
5	100	18.5	33	51	73	94

EATON BLADEUPS *(continued)*

BLADEUPS 5 kW BATTERY BACKUP TIMES (1 INTERNAL STRING) (in minutes)

Load (kW)	%	Internal 1 String	+1 EBM	+2 EBMs	+3 EBMs	+4 EBMs
2.5	50	16.5	47	82	124	166
3	60					
4	80					
5	100	6.1	22	38	57	76

BLADEUPS BATTERY BACKUP TIMES (Parallel UPS, in minutes)

Number of UPS Modules	Total Load (kW)	Internal Battery	+1 EBM per UPS		+2 EBMs per UPS		+3 EBMs per UPS		+4 EBMs per UPS		Configuration		
			Min	EBMs	Min	EBMs	Min	EBMs	Min	EBMs		Load %	kW per UPS
2	12	14	27	2	42	4	60	6	76	8	N+1	50%	6
3	24	8.7	18	3	28	6	43	9	55	12	N+1	67%	8
4	36	7.3	15	4	24	8	38	12	48	16	N+1	75%	9
5	48	6.7	13	5	23	10	35	15	44	20	N+1	80%	9.6
6	60	6.2	13	6	22	12	33	18	42	24	N+1	83%	10

BLADEUPS OPTIONS: RACK POWER MODULE (RPM)



The RPM delivers up to 36 kW of power in an organized manner to loads of various voltages, power cords and layouts. The 3U RPM can be deployed in the same rack with the UPS and IT equipment; there's no need for a dedicated infrastructure rack. The resulting architecture has fewer cables to manage, fewer distribution points to monitor, and greater flexibility for IT personnel make changes without an electrician.

- Provides plug-and-play primary distribution of power from three-phase input source to secondary power distribution devices
- Serves data center loads with various voltages, power cord configurations and layouts
- Distributes three-phase power to 12 poles, with choice of output receptacle types
- "Power Equalizer" LED gives quick visual indication of each circuits load, reducing possibility of overloads and breakers tripped offline
- Load information available from the front of the rack, no need to check individual power strips in the rear of the cabinet (hot isle)
- Branch circuit monitoring option allows easy load monitoring over the network, with Power Xpert infrastructure
- Installs in only 3U of space in EIA 19-inch rack or Enclosure (or optional wall-mount), all hardware included
- Enables customer installation and changes without the services of a licensed electrician

RPM DIMENSIONS

	Dimensions (H x W x D, inches)	Dimensions (H x W x D, mm)	Weight (lb)	Weight (kg)
Installed	5.2 x 17.4 x 26.3	132 x 442 x 668	32	15
Shipped	16.2 x 21.5 x 31.0	5.2 x 17.4 x 26.3	44	20

RPM TOPSELLERS

Topseller RPMs are the most popular configurations.

		Receptacles			
Part Number	Input Cable	Recep 1 (Qty)	Recep 2 (Qty)	Metering	List Price
Y03113011100000	BladeUPS 208V 15'	L21-20 (2)	L21-20 (2)	Power Equalizer	$2,790
Y03113022100000	BladeUPS 208V 15'	L21-30 (2)	L21-30 (2)	Power Equalizer	$2,880
Y03114022100000	BladeUPS 208V 20'	L21-30 (2)	L21-30 (2)	Power Equalizer	$2,955
Y03113055100000	BladeUPS 208V 15'	L6-30 (3)	L6-30 (3)	Power Equalizer	$2,390
Y03113047100000	BladeUPS 208V 15'	L6-20 (3)	5-20 (6)	Power Equalizer	$2,425
Y03113017100000	BladeUPS 208V 15'	L21-20 (2)	5-20 (6)	Power Equalizer	$2,565
Y03113027100000	BladeUPS 208V 15'	L21-30 (2)	5-20 (6)	Power Equalizer	$2,610
Y031220AA300000	IEC309-60 (60A) 10'	IEC C13 (12)	IEC C13 (12)	Energy Management	$3,705
Y03100044100000	Hardwire (208V)	L6-20 (3)	L6-20 (3)	Power Equalizer	$2,410
Y03100077100000	Hardwire (208V)	5-20 (6)	5-20 (6)	Power Equalizer	$2,240
Y032420CD100000	BladeUPS 400V 10'	IEC C13 (12)	IEC C19 (6)	Power Equalizer	$2,245
Y032440CD100000	BladeUPS 400V 20'	IEC C13 (12)	IEC C19 (6)	Power Equalizer	$2,405
Y032000CC300000	Hardwire (400V)	IEC C13 (12)	IEC C13 (12)	Energy Management	$3,275

EATON BLADEUPS *(continued)*

RPM ACCESSORIES

Description	Part Number	List Price
RPM wall-mount bracket kit	103006226	$205

Rack Power Module (RPM)

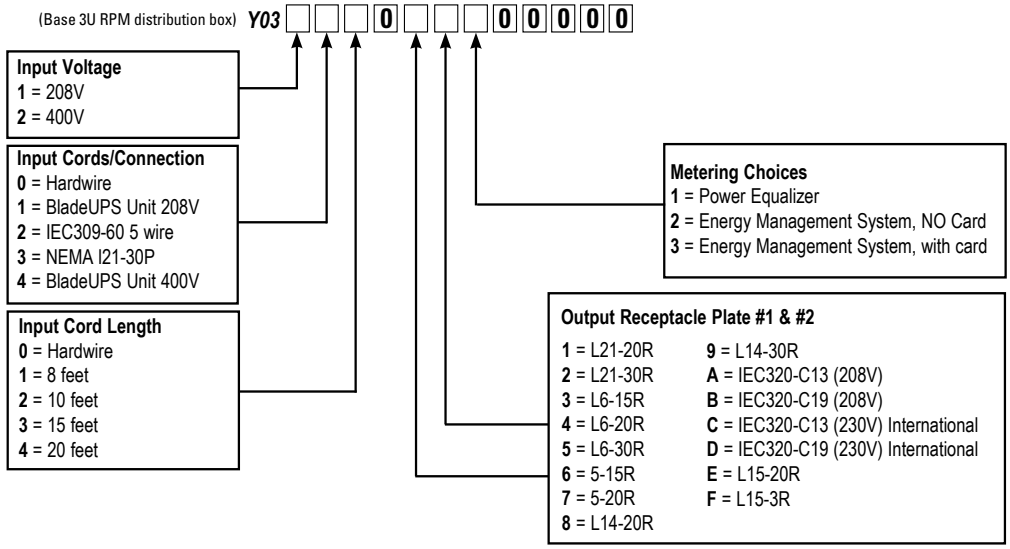

RACK POWER MODULE CONFIGURATOR

Description		Quantity	Part Number Digit	Value		List Price
Base 3U RPM Distribution Box		-	1	Y		
			2	0		
			3	3		
Input Voltage	208V	-	4	1		$1,675
	400V			2		$1,675
Input Cords: Connection	Hardwired	-	5	0		
	BladeUPS Unit 208V			1		
	IEC309-60 5 wire			2		
	NEMA L21-30P			3		
	BladeUPS Unit 400V			4		
Input Cords: Length	Hardwired	-	6	0		$215
	8 feet	-		1	BladeUPS Unit 208V	$170
					IEC309-60 5 wire	$640
					NEMA L21-30P	$125
					BladeUPS Unit 400V	$170
	10 feet	-		2	BladeUPS Unit 208V	$230
					IEC309-60 5 wire	$645
					NEMA L21-30P	$140
					BladeUPS Unit 400V	$230
	15 feet	-		3	BladeUPS Unit 208V	$315
					IEC309-60 5 wire	$705
					NEMA L21-30P	$155
					BladeUPS Unit 400V	$315
	20 feet	-		4	BladeUPS Unit 208V	$390
					IEC309-60 5 wire	$765
					NEMA L21-30P	$175
					BladeUPS Unit 400V	$390
Future Option		-	7	0		-

EATON BLADEUPS *(continued)*

RACK POWER MODULE CONFIGURATOR *(continued)*

Description		Quantity	Part Number Digit	Value	List Price
Output Receptacle Plate #1 & Output Receptacle Plate #2	L21-20R	2	8 & 9	1	$400
	L21-30R	2		2	$445
	L6-15R	3		3	$245
	L6-20R	3		4	$260
	L6-30R	3		5	$200
	5-15R	6		6	$170
	5-20R	6		7	$175
	L14-20R	3		8	$180
	L14-30R	3		9	$245
	IEC320-C13 (208V)	12		A	$180
	IEC320-C19 (208V)	6		B	$160
	IEC320-C13 (230V)	12		C	$180
	IEC320-C19 (230V)	6		D	$160
	L15-20	2		E	$400
	L15-30	2		F	$445
Metering Choices	Power Equalizer	-	10	1	-
	Energy Management System, NO card	-		2	$695
	Energy Management System, with card	-		3	$1,025
Future Option		-	11	0	-
	None	-	12	0	$0
		-	13	0	-
		-	14	0	-
		-	15	0	-

How to order: 1. Select base model voltage (208V or 400V), 2. Select input connector option, 3. Select input cord length (corded units only), 4. Select first receptacle plate option, 5. Select second receptacle plate option, 6. Select metering option.
Example of configured model part number: Y03111022300000

BLADEUPS OPTIONS: EATON BLADEUPS PDU WITH MAINTENANCE BYPASS

K-1 RATED TP-1 TRANSFORMER, 480V IN 208V OUT AND (2) 42-POLE PANELBOARDS



The Eaton BladeUPS PDU with Maintenance Bypass saves money and space in the data center or network operations center while offering three functions in one cabinet. The BladeUPS PDU combines step-down transformation, power distribution (up to 84 pole positions) and maintenance bypass into a single cabinet—the perfect complement to a 60 kVA BladeUPS system.

- TP-1, K1-rated input transformer—Energy-star efficiency, 480-208/120V, along with integral voltage transformation, electrical isolation and high efficiency
- Integrated maintenance bypass, including maintenance bypass breaker, rectifier input breaker and UPS output breaker, all rated for 225A, for high availability
- Available with up to two Eaton PRL-1a 42-pole panelboards, or up to four subfeed breakers or full rated lugs. PRL-1a panels accept BAB or QBHW style breakers
- Multiple power functions in a single cabinet mean efficient use of space
- Free-standing, easy-access design that complements other modern data center equipment while providing ease of installation and use for flexible access and deployment options
- Warranty: Eighteen months

EATON BLADEUPS PDU WITH MAINTENANCE BYPASS

Catalog Number	Style Number	Description	Rating (VA/Watts)	Input Connection	Output Receptacles	Dimensions (H x W x D, inches)	Weight (lb)	List Price
124100029-001	124100029-001	PDU for 60 kVA BladeUPS – 2 panels – 480:208V	60 kVA/60 kW	AC input 480V 3 phase 3 wire, ground, 60 Hz	(2) 42-pole panelboards (branch breakers not included)	80 x 30 x 36	1200	$23,190

EATON BLADEUPS *(continued)*

EATON BLADEUPS PDU WITH MAINTENANCE BYPASS *(continued)*

Catalog Number	Style Number	Description	Rating (VA/Watts)	Input Connection	Output Receptacles	Dimensions (H x W x D, inches)	Weight (lb)	List Price
124100029-002	PTE06056BAS4100	PDU with bypass w/ 1 42 pole panelboard	60 kVA/60 kW	Hardwire 480 vac	(1) 42 pole panelboard Eaton PRL1	80 x 30 x 36	1150	$22,730
124100029-003	PTE06056BAS41LL	PDU with bypass w/ 1 42 pole panelboard, full rated output lugs	60 kVA/60 kW	Hardwire 480 vac	(1) 42 pole panelboard Eaton PRL1, full output lugs	80 x 30 x 36	1170	$23,420
124100029-004	PTE06056BAS412A	PDU with bypass w/ 1 42 pole panelboard, 2 subfeed breakers	60 kVA/60 kW	Hardwire 480 vac	(1) 42 pole panelboard Eaton PRL1, 2 subfeed breakers	80 x 30 x 36	1210	$23,540
124100029-005	PTE06056BAS413A	PDU with bypass w/ 1 42 pole panelboard, 3 subfeed breakers	60 kVA/60 kW	Hardwire 480 vac	(1) 42 pole panelboard Eaton PRL1, 3 subfeed breakers	80 x 30 x 36	1225	$27,130
124100029-006	PTE06056BAS414A	PDU with bypass w/ 1 42 pole panelboard, 4 subfeed breakers	60 kVA/60 kW	Hardwire 480 vac	(1) 42 pole panelboard Eaton PRL1, 4 subfeed breakers	80 x 30 x 36	1240	$28,750
124100029-007	PTE06056BAS40LL	PDU with bypass w/ full rated output lugs	60 kVA/60 kW	Hardwire 480 vac	Full rated output lugs	80 x 30 x 36	1100	$22,820
124100029-008	PTE06056BAS402A	PDU with bypass w/ 2 subfeed breakers	60 kVA/60 kW	Hardwire 480 vac	2 subfeed breakers	80 x 30 x 36	1130	$25,270
124100029-009	PTE06056BAS403A	PDU with bypass w/ 3 subfeed breakers	60 kVA/60 kW	Hardwire 480 vac	3 subfeed breakers	80 x 30 x 36	1145	$26,760
124100029-010	PTE06056BAS404A	PDU with bypass w/ 4 subfeed breakers	60 kVA/60 kW	Hardwire 480 vac	4 subfeed breakers	80 x 30 x 36	1160	$28,410
124100029-011	PTE06056BAS42LL	PDU with bypass w/ 2 42 pole panelboard, full rated output lugs	60 kVA/60 kW	Hardwire 480 vac	(2) 42 pole panelboard Eaton PRL1, full output lugs	80 x 30 x 36	1210	$23,890
124100029-014	124100029-014	PDU for 60 kVA (No XFMR) BladeUPS – 2 panels – 208:208V	60 kVA/60 kW	Hardwire 208 vac	(2) 42 pole panelboards (branch breakers not included)	80 x 30 x 36	656	$19,900

Note:

1. Please contact Pre-sales Support to specify what trip ratings are needed for the subfeed breakers.
2. All subfeed breakers are standard Eaton FD frames (250AF), with trip rating at 150AT. If other rating is needed please contact Eaton Product Management, or Customer Care
3. The PDU with bypass should be discounted at the same multiplier level as the BladeUPS system.
4. Standard Panelboards accept BAB or QBH breakers. Contact Customer Care if other breakers are required.
5. Order X-Slot Industrial relay card for relay communication from UPS to PDU to properly operate the bypass indicator.

EATON 9355 UPS

Powerware series

Double-conversion (10–15 kVA)

This innovative design delivers one of the industry's best combinations of high efficiency, low input current distortion and highest power factor, while conserving valuable space and offering the most cost-effective, highest performance option available today.



- True double-conversion topology protects equipment from all nine of the most common power problems
- Industry leading power density, providing up to 20 percent more power capacity in a compact tower design including batteries
- Up to 350 percent more standard runtime
- Up to a 74 percent footprint reduction and up to an 83 percent total size reduction
- Flexible on-board power distribution modules (PDMs) allow for hardwired output or up to 15 different output receptacle options, reducing installation and site preparation expenses
- Plug-and-play rack Enclosure power distribution with the 9355 on-board PDU
- Inherently scalable from 10–15 and 20–30 kVA, allowing you to pay as you grow or increase capacity with no additional hardware purchases or installation concerns
- Eaton's patented Hot Sync paralleling technology allows for wireless paralleling in the event of communications failure, providing the industry's only truly redundant paralleling technology
- Flexible 0 footprint extended run configurations allow for adding additional runtime in the same industry-leading compact footprint
- Includes rear-mounted bypass switch
- Includes on-site 5x8 startup and operator training by Eaton field technician
- Includes one year of eNotify remote monitoring service (requires connectivity parts and self installation)

9355 (10–15 kVA) MODELS

Description	Part Number[1]	Rating	Input/Output Voltage	Base Runtime (min)	Dimensions (H x W x D, inches)[3]	Weight (lb)[3]	List Price
PW9355 10 kVA with 32-Battery (2-high)	KA1011100000010	10 kVA/9 kW	208/208	8	32.2 x 12.0 x 33.7	373	$16,375
PW9355 10 kVA with 64-Battery (3-high)	KA1012100000010	10 kVA/9 kW	208/208	22	47.8 x 12.0 x 33.7	609	$18,230
PW9355 10 kVA with 32-Battery (2-high)	KA1011200000010	10 kVA/9 kW	220/220[2]	8	32.2 x 12.0 x 33.7	373	$16,375
PW9355 10 kVA with 64-Battery (3-high)	KA1012200000010	10 kVA/9 kW	220/220[2]	22	47.8 x 12.0 x 33.7	609	$18,230
PW9355 10 kVA with 32-Battery and input isolation transformer (3-high)	KA1013400000010	10 kVA/9 kW	480/208	8	47.8 x 12.0 x 33.7	577	$20,865
PW9355 10 kVA with 32-Battery and input isolation transformer (3-high)	KA1013600000010	10 kVA/9 kW	600/208	8	47.8 x 12.0 x 33.7	577	$20,865
PW9355 15 kVA with 32-Battery (2-high)	KA1511100000010	15 kVA/13.5 kW	208/208	4	32.2 x 12.0 x 33.7	373	$17,788
PW9355 15 kVA with 64-Battery (3-high)	KA1512100000010	15 kVA/13.5 kW	208/208	13	47.8 x 12.0 x 33.7	609	$19,687
PW9355 15 kVA with 32-Battery (2-high)	KA1511200000010	15 kVA/13.5 kW	220/220[2]	4	32.2 x 12.0 x 33.7	373	$17,788
PW9355 15 kVA with 64-Battery (3-high)	KA1512200000010	15 kVA/13.5 kW	220/220[2]	13	47.8 x 12.0 x 33.7	609	$19,687
PW9355 15 kVA with 32-Battery and input isolation transformer (3-high)	KA1513400000010	15 kVA/13.5 kW	480/208	4	47.8 x 12.0 x 33.7	577	$22,015
PW9355 15 kVA with 32-Battery and input isolation transformer (3-high)	KA1513600000010	15 kVA/13.5 kW	600/208	4	47.8 x 12.0 x 33.7	577	$22,015

1. 50/60 Hz auto-sensing.
2. 220V units are wye connected 220/127V input and 220/127V output, three-phase, 4-wire plus ground.
3. Add 47 lbs for 2-high configurations or 50 lbs for 3-high configurations to determine shipping weight.
4. An input neutral is required for all configurations unless the input isolation transformer is used.
5. For parallel systems, change CTO digit #5 to a "2" and add $300 to the list price and include Parallel Tie Cabinet.. Eaton startup is required for factory warranty of parallel configuration.

SURGE PROTECTION

See the surge protection product section for more details.

SOFTWARE AND CONNECTIVITY OPTIONS

Description	Part Number	List Price
Power Xpert Gateway UPS Card	PXGXUPS (103007974-5591)	$450

Bundled with Intelligent Power Software Suite CD and communication cable. See the software and connectivity sections for more details.

EATON 9355 UPS

Powerware series *(continued)*

9355 OPTIONS

Description	Part Number	Additional Information	Input/Output Voltage	Dimensions (H x W x D, inches)	Weight (lb)	List Price
PW9355 10-15 kVA 2-High Line & Match Extended Battery Module	103004192-5501	64 Batteries	-	32.2 x 12.0 x 30.2	480	$6,099
PW9355 10-15 kVA 3-High Line & Match Extended Battery Module	103004193-5501	96 Batteries	-	47.8 x 12.0 x 30.2	710	$8,702
PW9355 Wall Mount Parallel Tie Cabinet, 2-Breaker MBP (225A Bus, 200A Neutral, (1) 225A MBP, & (4) 80A MOBs)	124100020-001*	-	208V/208V	36.0 x 20.0 x 5.75	68[1]	$1,705
PW9355 Wall Mount Parallel Tie Cabinet With MIS Breaker (225A MBP, 225A MIS, & (4) 80A MOBs)	124100020-002*	-	208V/208V	60 x 20.0 x 5.75	140	$4,049
PW9355 Remote EPO Switch	103002939	Wall-mounted	-	-	-	$472
PW9355 10-15 kVA Seismic Mounting Kit	103004194-5501	Zone 4 Kit	-	-	-	$2,023
Remote Monitor Panel requires Industrial Relay X-Slot Card part		See section for Connectivity Options & Pricing				
CAN Bridge Parallel Card	103004336*	-	-		-	$530

1. This is a net weight; please add 40 lb for the shipping weight of the panels and 50 lb for panels with panelboard provisions.

* Eaton startup is required for factory warranty of parallel configuration

9355 BYPASS PANELS

Description	Part Number	Input/Output Voltage	Dimensions (H x W x D, inches)	Weight (lb)[1]	List Price
PW9355 15 kVA 3-breaker Maintenance Bypass Panel (100A Bus, 200A Neutral, & 60A MBP, MIB, MIS)	124100027-001	208V/208V	48.0 x 20.0 x 5.8	120	$3,588
PW9355 15 kVA 3-breaker Maintenance Bypass Panel with integral 120 KA TVSS (100A Bus, 200A Neutral, & 60A MBP, MIB, MIS)	124100027-002	208V/208V	60.0 x 20.0 x 5.8	120	$6,810
PW9355 15 kVA 3-breaker Maintenance Bypass Panel with 36-Pole Distribution Provisions (Cutler-Hammer GHB 65 kAIC)	124100027-003	208V/208V	72.0 x 20.0 x 5.8	210	$4,004
PW9355 15 kVA 3-breaker Maintenance Bypass Panel with 36-Pole Distribution Provisions & Integrated TVSS (Cutler-Hammer GHB 65 kAIC)	124100027-004	208V/208V	90.0 x 20.0 x 5.8	225	$7,384
PW9355 15 kVA 3-breaker Maintenance Bypass Panel with 36-Pole Distribution Provisions (Cutler-Hammer GHBW 22 kAIC)	124100027-006	208V/208V	72.0 x 20.0 x 5.8	210	$4,004
PW9355 15 kVA 3-breaker Maintenance Bypass Panel with 36-Pole Distribution Provisions (Cutler-Hammer BAB 10 kAIC)	124100027-007	208V/208V	72.0 x 20.0 x 5.8	210	$4,004
PW9355 15 kVA 3-breaker Maintenance Bypass Panel with 36-Pole Distribution Provisions & Integrated TVSS (Cutler-Hammer GBHW 22 kAIC)	124100027-008	208V/208V	90.0 x 20.0 x 5.8	225	$7,384
PW9355 15 kVA 3-breaker Maintenance Bypass Panel with 36-Pole Distribution Provisions & Integrated TVSS (Cutler-Hammer BAB 10 kAIC)	124100027-009	208V/208V	90.0 x 20.0 x 5.8	225	$7,384

1. This is a net weight; please add 40 lb for the shipping weight of the panels and 50 lb for panels with panelboard provisions.

OUTPUT RECEPTACLES

Receptacle Codes	(Qty) NEMA Type	Enter "Receptacle Code" into CTO Digits #	Price Adder for EACH Receptacle Code Chosen
2	(1) L15-30R	9, 10 or 11 only	$220
3	(1) L21-20R	9, 10 or 11 only	$220
4	(1) L21-30R	9, 10 or 11 only	$220
A	(2) 5-15R	9,10,11,12	$220
B	(2) 5-20R UL	9,10,11,12	$220
D	(2) 6-15R	9,10,11,12	$220
E	(2) 6-20R	9,10,11,12	$220
F	(2) L5-15R	9,10,11,12	$220
G	(1) L5-20R*	9,10,11,12	$220
H	(1) L5-30R*	9,10,11,12	$220
I	(2) L6-15R	9,10,11,12	$220
J	(1) L6-20R*	9,10,11,12	$220
K	(1) L6-30R*	9,10,11,12	$220
L	(1) L14-20R*	9,10,11,12	$220
M	(1) L14-30R*	9,10,11,12	$220
X	Blank Panel	9,10,11,12	$20
N	(2) IEC 320 C13 (120V)	9,10,11,12	$220
P	(2) IEC 320 C19 (120V)	9,10,11,12	$220

Note: Arrange receptacle codes in numerical-alphabetical order in digits 9 through 12 of the CTO number

Example 1: a PDM with an L21-20, an L14-30, and Qty 2 IEC320-C19 would have digits 9 through 12 of the CTO arranged as "3MPP"

Example 2: a PDM with a 5-15R, and an L6-30, and an L14-30 would have digits 9 through 12 of the CTO arranged as "AKMX"

The combined quantities of LOCKING receptacles (denoted by *) must not exceed 4 per unit.

Please be sure to utilize the "X" designation for any of the 4 total slots not populated.

EATON 9355 UPS

Powerware series *(continued)*

BUILT-IN CONNECTIVITY OPTIONS

Description	Value for CTO Digit 8	Part Number (if ordered separately)	List Price
NONE (No Pre-installed X-Slot card)	0	-	$0
Power Xpert Gateway Card	3	103007974-5591	$450
Modbus Card-X-Slot	4	103005425-5591	$661
Relay Interface Card-X-Slot (AS/400 Compatible)	5	1018460	$146
Industrial Relay and Display Drive Card X-Slot	6	103003055	$335

Note: You can have up to two optional connectivity cards installed.

9355 BATTERY BACKUP TIMES (in minutes) @ 0.9 POWER FACTOR

Load (VA/Watts)	UPS + Internal 32 Battery	+1 EBM 64	+2 EBMs 64	+3 EBMs 64	+4 EBMs 64	UPS + Internal 64 Battery	+1 EBM 96	+2 EBMs 96	+3 EBMs 96
15000/13500	4.6	23.0	43.0	65.1	88.6	13.3	43.0	76.7	113.0
14500/13050	4.9	24.1	45.2	68.3	93.0	14.1	45.2	80.5	119.0
14000/12600	5.2	25.2	47.3	71.5	97.4	14.9	47.3	84.2	125.0
13500/12150	5.5	26.4	49.4	74.7	102.0	15.8	49.4	88.1	130.0
13000/11700	5.8	27.6	51.6	78.1	106.0	16.7	51.6	92.0	136.0
12500/11250	6.1	28.8	54.0	81.6	111.0	17.6	54.0	96.2	142.0
12000/10800	6.5	30.2	56.5	85.5	116.0	18.6	56.5	101.0	149.0
11500/10350	6.9	31.6	59.3	89.7	122.0	19.2	59.3	106.0	156.0
11000/9900	7.3	33.3	62.4	94.4	129.0	20.2	62.4	111.0	164.0
10500/9450	7.8	35.1	65.9	99.6	136.0	21.4	65.9	117.0	174.0
10000/9000	8.4	37.2	69.8	106.0	144.0	22.6	69.8	124.0	184.0
9500/8550	9.1	39.6	74.2	112.0	153.0	24.1	74.2	132.0	196.0
9000/8100	9.9	42.3	79.4	120.0	163.0	25.7	79.4	141.0	209.0
8500/7650	10.8	45.5	85.2	129.0	175.0	27.6	85.2	152.0	225.0
8000/7200	11.9	49.1	91.9	139.0	189.0	29.8	91.9	164.0	242.0
7500/6750	13.1	53.2	99.7	151.0	205.0	32.3	99.7	178.0	263.0
7000/6300	14.6	58.0	109.0	164.0	224.0	35.2	109.0	194.0	286.0
6500/5850	16.3	63.5	119.0	180.0	245.0	38.6	119.0	212.0	314.0
6000/5400	18.4	70.0	131.0	198.0	270.0	42.5	131.0	234.0	346.0
5500/4950	20.1	77.6	145.0	220.0	300.0	47.2	145.0	259.0	383.0
5000/4500	22.4	86.6	162.0	245.0	334.0	52.6	162.0	289.0	428.0
4500/4050	25.2	97.4	182.0	276.0	376.0	59.2	182.0	325.0	-
4000/3600	28.6	110.0	207.0	313.0	426.0	67.1	207.0	369.0	-
3500/3150	32.8	127.0	238.0	359.0	-	77.0	238.0	423.0	-
3000/2700	38.3	148.0	277.0	418.0	-	89.7	277.0	-	-
2500/2250	45.6	176.0	329.0	-	-	107.0	329.0	-	-

Note: Backup times are approximate and may vary with equipment, configuration, battery age, temperature, etc.

EATON 9355 UPS

Powerware series *(continued)*

9355 (20–30 KVA) MODELS

20 kVA (18 kW)

Description	Part Number[1]	Input/Output Voltage	Base Runtime (min)	Dimensions (H x W x D, inches)[3]	Weight (lb)[3]	List Price	System Price
PW9355 20 kVA with Internal Batteries	KB2013100000010	208/208	18	66.0 x 20.0 x 34.1	1160	$24,393	$24,393
PW9355 20 kVA Single Feed with	KB2013100000010	208/208	18	66.0 x 20.0 x 34.1	1160	$24,393	$30,017
Options Cabinet & Internal Batteries	KBT001100000010*	Input Isolation options Cab		66.0 x 20.0 x 34.1	535	$5,624	
PW9355 20 kVA with Internal Batteries	KB2013100000010	208/208	18	66.0 x 20.0 x 34.1	1160	$24,393	
& Dual Feed Isolation Transformer	KBT001100000010*	Input Isolation options Cab		66.0 x 20.0 x 34.1	535	$5,624	$35,641
(2 Opt Cabs)	KBT002100000010	Output Isolation options Cab		66.0 x 20.0 x 34.1	535	$5,624	
PW9355 20 kVA with Internal Batteries	KB2013200000010	220/220[2]	18	66.0 x 20.0 x 34.1	1160	$24,393	$24,393
PW9355 20 kVA with Internal Batteries	KB2013100000010	480/208	18	66.0 x 20.0 x 34.1	1160	$24,393	$30,017
& Single Feed Options Cabinet	KBT001200000010*	Input Isolation options Cab		66.0 x 20.0 x 34.1	535	$5,624	
PW9355 20 kVA Dual Feed with Options	KB2013100000010	480/208	18	66.0 x 20.0 x 34.1	1160	$24,393	
Cabinets & Internal Batteries	KBT002200000010	Input Isolation options Cab		66.0 x 20.0 x 34.1	535	$5,624	$35,641
(2 Opt Cabs)	KBT001200000010*	Output Isolation options Cab		66.0 x 20.0 x 34.1	535	$5,624	
PW9355 20 kVA Single Feed with	KB2013100000010	600/208	18	66.0 x 20.0 x 34.1	1160	$24,393	$30,017
Options Cabinets & Internal Batteries	KBT001300000010	Input Isolation options Cab		66.0 x 20.0 x 34.1	535	$5,624	
PW9355 20 kVA Dual Feed with	KB2013100000010	600/208	18	66.0 x 20.0 x 34.1	1160	$24,393	
Options Cabinets & Internal Batteries	KBT001300000010*	Input Isolation options Cab		66.0 x 20.0 x 34.1	535	$5,624	$35,641
	KBT002300000010	Output Isolation options Cab		66.0 x 20.0 x 34.1	535	$5,624	
PW9355 20 kVA Single Feed with Options	KB2013100000010	480/480	18	66.0 x 20.0 x 34.1	1160	$24,393	$35,641
Cabinet & Internal Batteries (1 Opt Cab)	KBT004200000010*	Input Isolation options Cab		66.0 x 20.0 x 34.1	792	$11,248	

30 kVA (27 kW)

Description	UPS Part (CTO) Number	Input/Output Voltage	Base Runtime (min)	Dimensions (H x W x D, inches)[3]	Weight (lb)[3]	List Price	System Price
PW9355 30 kVA with Internal Batteries	KB3013100000010	208/208	11	66.0 x 20.0 x 34.1	1160	$25,565	$25,565
PW9355 30 kVA Single Feed with	KB3013100000010	208/208	11	66.0 x 20.0 x 34.1	1160	$25,565	$31,189
Options Cabinet & Internal Batteries, including Isolation	KBT001100000010*	Input Isolation options Cab		66.0 x 20.0 x 34.1	535	$5,624	
PW9355 30 kVA with Internal Batteries	KB3013100000010	208/208	11	66.0 x 20.0 x 34.1	1160	$25,565	
& Dual Feed Isolation Transformer	KBT001100000010*	Input Isolation options Cab		66.0 x 20.0 x 34.1	535	$5,624	$36,813
(2 Opts Cabs)	KBT002100000010	Output Isolation options Cab		66.0 x 20.0 x 34.1	535	$5,624	
PW9355 30 kVA with Internal Batteries	KB3013200000010	220/220[2]	11	66.0 x 20.0 x 34.1	1160	$25,565	$25,565
PW9355 30 kVA with Internal Batteries	KB3013100000010	480/208	11	66.0 x 20.0 x 34.1	1160	$25,565	$31,189
& Single Feed Options Cabinet	KBT001200000010*	Input Isolation options Cab		66.0 x 20.0 x 34.1	535	$5,624	
PW9355 30 kVA Dual Feed with	KB3013100000010	480/208	11	66.0 x 20.0 x 34.1	1160	$25,565	
Options Cabinets & Internal Batteries	KBT001200000010*	Input Isolation options Cab		66.0 x 20.0 x 34.1	535	$5,624	$36,813
(2 Opts Cabs)	KBT002200000010	Output Isolation options Cab		66.0 x 20.0 x 34.1	535	$5,624	
PW9355 30 kVA Single Feed with	KB3013100000010	600/208	11	66.0 x 20.0 x 34.1	1160	$25,565	$31,189
Options Cabinet & Internal Batteries	KBT001300000010	Output Isolation options Cab		66.0 x 20.0 x 34.1	535	$5,624	
PW9355 30 kVA Dual Feed with	KB3013100000010	600/208	11	66.0 x 20.0 x 34.1	1160	$25,565	
Options Cabinet & Internal Batteries	KBT001300000010*	Input Isolation options Cab		66.0 x 20.0 x 34.1	535	$5,624	$36,813
(2 Opts Cabs)	KBT002300000010	Output Isolation options Cab		66.0 x 20.0 x 34.1	535	$5,624	
PW9355 30 kVA Single Feed with Options	KB3013100000010	480/480	11	66.0 x 20.0 x 34.1	1160	$25,565	$36,813
Cabinet & Internal Batteries (1 Opts Cab)	KBT004200000010*	Input Isolation options Cab		66.0 x 20.0 x 34.1	792	$11,248	

* contains MBP Rotary Style

1. 50/60 Hz auto-sensing.
2. 220V units are wye connected 220/127V input and 220/127V output, three-phase, 4-wire plus ground.
3. Add 47 lb for 2-high configurations or 50 lbs for 3-high configurations to determine shipping weight.
4. An input neutral is required for all configurations unless the input isolation transformer is used.
5. For parallel systems, change CTO digit #5 to a "2" and add $500 to the list price and include Parallel Tie Cabinet.. Eaton startup is required for factory warranty of parallel configuration.

EATON 9355 UPS

Powerware series *(continued)*

9355 OPTIONS

Description	Part Number	Rating	Input/Output Voltage	Dimensions (H x W x D, inches)	Weight (lb)[1]	List Price
PW9355 20 & 30 kVA 2 String Line & Match Extended Battery Cabinet	103005183	36	-	66.0 x 20.0 x 34.1	1105.0	$8,775
PW9355 20 & 30 kVA 4 String Line & Match Extended Battery Cabinet	103004868	72	-	66.0 x 20.0 x 34.1	2060.0	$13,392
Option Cabinet, Containing Maintenance Bypass, with No Transformer	KBT000000000010	-	208/208	66.0 x 20.0 x 34.1	205.0	$2,845
PW9355 30 kVA Wall-mount Parallel Tie Cabinet 2-Breaker MBP (400A Bus, 200A Neutral, 1 350A MBP, & (4) 110A MOBs)	124100026-001*	-	208/208	48.0 x 20.0 x 5.8	150.0[1]	$3,166
PW9355 30 kVA Wall-mount Parallel Tie Cabinet with MIS Breaker (350A MBP, 350A MIS, & (4) 110A MOBs)	124100026-002*	-	208/208	57.0 x 24.0 x 11.3	235	$7,324
Remote EPO Switch	103002939	Wall-mounted	-	-	-	$472
Zone 4 Seismic Kit (UPS Cabinet only)	103004896	Zone 4 Kit	-	-	-	$546
Remote Monitor Panel requires Industrial Relay X-Slot Card part		See section for Connectivity Options & Pricing				
CAN Bridge Parallel Card	103004336*	-	-	-	-	$530
UPS Optional Output Breaker (125A, Change Digit #5 in CTO number to "3" for RT systems)						$250

1. This is a net weight; please add 40 lb for the shipping weight of the panels and 50 lb for panels with panelboard provisions.

Notes: Up to 3 EBMs can be added to each UPS for extended runtime. To find items and pricing for spare parts, kVA upgrades and parallel upgrades, please refer to the 9355 services page.

* Eaton startup is required for factory warranty of parallel configuration

9355 BYPASS PANELS

Description	Part Number	Input/Output Voltage	Dimensions (H x W x D, inches)	Weight (lb)[1]	List Price
PW9355 20 & 30 kVA 3-breaker Maintenance Bypass Panel (225A Bus, 225A Neutral, & 110A MBP, 125A MIB, 110A MIS)	124100028-001	208/208	48.0 x 20.0 x 5.8	120	$4,095
PW9355 20 & 30 kVA 3-breaker Maintenance Bypass Panel with integral 120 KA TVSS (225A Bus, 225A Neutral, & 110A MBP, 125A MIB, 110A MIS)	124100028-002	208/208	60.0 x 20.0 x 5.8	120	$7,775
PW9355 20 & 30kVA 3-Breaker Maintenance Bypass Panel with 36-pole Distribution Provisions (Cutler-Hammer GHB 65 kAIC)	124100028-003	208/208	72.0 x 20.0 x 5.8	210	$4,723
PW9355 20 & 30 kVA 3-Breaker Maintenance Bypass Panel with 36-pole Distribution Provisions & Integrated TVSS (Cutler-Hammer GHB 65 kAIC)	124100028-004	208/208	90.0 x 20.0 x 5.8	225	$8,135
PW9355 20 & 30kVA 3-Breaker Maintenance Bypass Panel with 36-pole Distribution Provisions (Cutler-Hammer GBHW 22 kAIC)	124100028-006	208/208	72.0 x 20.0 x 5.8	210	$4,723
PW9355 20 & 30kVA 3-Breaker Maintenance Bypass Panel with 36-pole Distribution Provisions (Cutler-Hammer BAB 10 kAIC)	124100028-007	208/208	72.0 x 20.0 x 5.8	210	$4,723
PW9355 20 & 30 kVA 3-Breaker Maintenance Bypass Panel with 36-pole Distribution Provisions & Integrated TVSS (Cutler-Hammer GBHW 22 kAIC)	124100028-008	208/208	90.0 x 20.0 x 5.8	225	$8,135
PW9355 20 & 30 kVA 3-Breaker Maintenance Bypass Panel with 36-pole Distribution Provisions & Integrated TVSS (Cutler-Hammer BAB 10 kAIC)	124100028-009	208/208	90.0 x 20.0 x 5.8	225	$8,135

1. This is a net weight; please add 40 lb for the shipping weight of the panels and 50 lb for panels with panelboard provisions.

Note: Please specify preference for breakers.

9355 BUILT-IN CONNECTIVITY OPTIONS

Available X-Slot card options

Description	Value for CTO Digit 8	Part Number *(if ordered separately)*	List Price
NONE (No pre-installed X-Slot card)	0	–	$0
Power Xpert Gateway Card	3	103007974-5591	$450
Modbus Card-X-Slot	4	103005425-5591	$661
Relay Interface Card-X-Slot (AS/400 Compatible)	5	1018460	$146
Industrial Relay and Display Drive Card X-Slot	6	103003055	$335

Note: UPS has two X-Slots, one of which can be populated or factory installed, with the second X-Slot accessory supplied separately.

SOFTWARE AND CONNECTIVITY OPTIONS

Description	Part Number	List Price
Power Xpert Gateway UPS Card	PXGXUPS (103007974-5591)	$450

Bundled with Intelligent Power Software Suite CD and communication cable. See the software and connectivity sections for more details.

EATON 9355 UPS

Powerware series *(continued)*

9355 BATTERY BACKUP TIMES (in minutes)

Load (VA/Watts)	UPS w/Internal Battery	Internal Battery +EBC 36	Internal Battery +EBC 72	Internal Battery +2 EBC 72	Internal Battery +3 EBC 72
30000/27000	11	31	56	89	108
29000/26100	11	33	58	90	109
28000/25200	12	35	60	93	111
27000/24300	12	38	62	95	114
26000/23400	13	40	65	98	118
25000/22500	14	43	68	101	124
24000/21600	14	46	71	103	129
23000/20700	15	48	74	106	134
22000/19800	16	51	76	109	144
21000/18900	17	53	79	111	152
20000/18000	18	56	82	114	160
19000/17100	19	58	85	117	175
18000/16200	20	62	88	120	189
17000/15300	22	66	92	130	204
16000/14400	24	71	96	142	219
15000/13500	26	75	101	154	234
14000/12600	28	79	105	166	249
13000/11700	31	84	110	178	265
12000/10800	35	88	114	201	280
11000/9900	38	94	119	226	319
10000/9000	42	101	134	251	355
7500/6750	58	117	188	347	471
5000/4500	90	188	294	543	610

Note: Battery backup times are approximate and may vary with equipment, configuration, battery age, temperature, etc.

EATON EMERGENCY LIGHTING UPS



Eaton's Emergency Lighting product line offers a UPS system and line and match battery cabinets to achieve the minimum UL 924 required 90 minutes of runtime. The Eaton Emergency Lighting UPS line combines the industry's highest capacity and smallest footprint, making it the most cost-effective solution to comply with Emergency Lighting.

All solutions are fully tested to comply with UL 924.

- 90 minutes of runtime
- Allows for a manually operated and protected test switch
- 10-30 kVA
- 208, 277 and 480V options

SINGLE-PHASE EMERGENCY LIGHTING

Description	Part Number	Individual Description	Quantity Required	Rating (kVA/kW)	Input/Output Voltage	System Runtime (min)	Dimensions (H x W x D, inches)	Weight (lb)	Individual List Price	System List Price
	K41012000000000	9155 10 kVA UPS	1						$14,567	
Eaton Emergency Lighting	BH-10KEL2081P-100	UPS Upgrade	1						$2,712	
Single-phase 7 kW 277V	103004193-5501	9155 Battery Cabinet	2	10/6.8	277/277	134	47.8 x 48.0 x 33.7	2,408	$8,702	$46,467
UPS System	BH-EBM96EL-600	Battery Upgrade	2						$926	
	BH-KBT001-200	277/277V Transformer	1						$9,932	
	K41512000000000	9155 15 kVA UPS	1						$16,632	
Eaton Emergency Lighting	BH-15KEL2081P-100	UPS Upgrade	1						$3,120	
Single-phase 9 kW 277V	103004193-5501	9155 Battery Cabinet	2	15/9	277/277	120	47.8 x 48.0 x 33.7	2,408	$8,702	$48,940
UPS System	BH-EBM96EL-600	Battery Upgrade	2						$926	
	BH-KBT001-200	277/277V Transformer	1						$9,932	

THREE-PHASE EMERGENCY LIGHTING

Description	Part Number	Individual Description	Quantity Required	Rating (kVA/kW)	Input/Output Voltage	System Runtime (min)	Dimensions (H x W x D, inches)	Weight (lb)	Individual List Price	System List Price
	KA1012100000010	9355 10 kVA UPS	1						$18,230	
Eaton Emergency Lighting	BH-10KEL2083P-100	UPS Upgrade	1	10/8.5	208/208	124	47.8 x 36.0 x 33.7	2,029	$3,472	$40,958
Three-phase 8.5 kW 208V	103004193-5501	9355 Battery Cabinet	2						$8,702	
UPS System	BH-EBM96EL-600	Battery Upgrade	2						$926	
	KA1512100000010	9355 15 kVA UPS	1						$19,687	
Eaton Emergency Lighting	BH-15KEL2083P-100	UPS Upgrade	1	15/13.1	208/208	113	47.8 x 48.0 x 33.7	2,739	$3,876	$52,447
Three-phase 13 kW 208V	103004193-5501	9355 Battery Cabinet	3						$8,702	
UPS System	BH-EBM96EL-600	Battery Upgrade	3						$926	
	KB2013100000010	9355 20 kVA UPS	1						$24,393	
Eaton Emergency Lighting	BH-20KEL2083P-100	UPS Upgrade	1	20/18	208/208	114	66.0 x 60.0 x 34.1	5,280	$4,583	$58,694
Three-phase 18 kW 208V	103004868	9355 Battery Cabinet	2						$13,392	
UPS System	BH-EBC72EL-600	Battery Upgrade	2						$1,467	
	KB3013100000010	9355 30 kVA UPS	1						$25,565	
Eaton Emergency Lighting	BH-30KEL208SF-100	UPS Upgrade	1	30/24	208/208	108	66.0 x 60.0 x 34.1	5,280	$4,955	$60,238
Three-phase 24 kW 208V	103004868	9355 Battery Cabinet	2						$13,392	
UPS System	BH-EBC72EL-600	Battery Upgrade	2						$1,467	
	KB3013100000010	9355 30 kVA UPS	1						$25,565	
Eaton Emergency Lighting	BH-30KEL2083P-100	UPS Upgrade	1	30/27	208/208	90	66.0 x 80.0 x 34.1	7,340	$4,955	$75,097
Three-phase 27 kW 208V	103004868	9355 Battery Cabinet	3						$13,392	
UPS System	BH-EBC72EL-600	Battery Upgrade	3						$1,467	
	KB2013100000010	9355 20 kVA UPS	1						$24,393	
	BH-20KEL2083P-100	UPS Upgrade	1						$4,583	
Eaton Emergency Lighting	103004868	9355 Battery Cabinet	2	20/18	480/277	114	66.0 x 80.0 x 34.1	6,072	$13,392	$72,191
Three-phase 18 kW 480V	BH-EBC72EL-600	Battery Upgrade	2						$1,467	
UPS System	KBT004200000010	9355 Options Cabinet	1						$11,248	
	BH-KBT004-200	Options Upgrade	1						$2,249	
	KB3013100000010	9355 30 kVA UPS	1						$25,565	
	BH-30KEL208SF-100	UPS Upgrade	1						$4,955	
Eaton Emergency Lighting	103004868	9355 Battery Cabinet	2	30/24	480/277	108	66.0 x 80.0 x 34.1	6,072	$13,392	$73,735
Three-phase 24 kW 480V	BH-EBC72EL-600	Battery Upgrade	2						$1,467	
UPS System	KBT004200000010	9355 Options Cabinet	1						$11,248	
	BH-KBT004-200	Options Upgrade	1						$2,249	
	KB3013100000010	9355 30 kVA UPS	1						$25,565	
	BH-30KEL2083P-100	UPS Upgrade	1						$4,955	
Eaton Emergency Lighting	103004868	9355 Battery Cabinet	3	30/27	480/277	90	66.0 x 100.0 x 34.1	8,132	$13,392	$88,594
Three-phase 27 kW 480V	BH-EBC72EL-600	Battery Upgrade	3						$1,467	
UPS System	KBT004200000010	9355 Options Cabinet	1						$11,248	
	BH-KBT004-200	Options Upgrade	1						$2,249	

EATON 93E UPS & ACCESSORIES

The Eaton 93E UPS delivers three key benefits that drive a lower total cost of ownership (TCO): internal batteries, compact footprint and energy-efficiency.

Energy-efficient

- Delivers up to 98% efficiency
- Up to 7% more efficient than competitive units
- Helps you qualify for local utility rebates and incentives

Internal batteries

- Deliver up to 21 minutes of runtime
- Pre-wired for easy installation

Compact footprint

- Up to 35% smaller than similarly specified competitive solutions
- Allows dedication of more floor space to revenue-producing equipment



20-30 kVA



40-60 kVA

93E 20 and 30 KVA UPS MODELS (50/60 Hz)

Description	Part Number	Input/Output Voltage	Input Feed	Internal Runtime (min) Load 100%/50%	Dimensions (H x W x D, inches)	Weight (lb)	List Price
20 kVA (16 kW) Requires hardware to upgrade to 30 kVA or add EBCs[1]							
20 kVA UPS Single Feed with Internal Batteries	9EF02GG03001003	208 or 220V	Single	12 / 28	53.5 x 20.9 x 31.5	831	$20,400
20 kVA UPS Single Feed with Internal Batteries & MS Network Card	9EF02GG03021003	208 or 220V	Single	12 / 28	53.5 x 20.9 x 31.5	831	$20,650
20 kVA UPS Single Feed with Internal Batteries & MS Network/ModBus Card	9EF02GG03031003	208 or 220V	Single	12 / 28	53.5 x 20.9 x 31.5	831	$20,750
20 kVA UPS Dual Feed with Internal Batteries	9EF02GG03002003	208 or 220V	Dual	12 / 28	53.5 x 20.9 x 31.5	840	$20,500
20 kVA UPS Dual Feed with Internal Batteries & MS Network Card	9EF02GG03022003	208 or 220V	Dual	12 / 28	53.5 x 20.9 x 31.5	840	$20,750
20 kVA UPS Dual Feed with Internal Batteries & MS Network/ModBus Card	9EF02GG03032003	208 or 220V	Dual	12 / 28	53.5 x 20.9 x 31.5	840	$20,850
20 kVA (16 kW) Upgrade to 30 kVA by Firmware, EBC capable[2]							
20 kVA UPS Single Feed with Internal Batteries	9EA02GG05001003	208 or 220V	Single	21 / 47	53.5 x 20.9 x 31.5	1049	$21,800
20 kVA UPS Single Feed with Internal Batteries & MS Network Card	9EA02GG05021003	208 or 220V	Single	21 / 47	53.5 x 20.9 x 31.5	1049	$22,050
20 kVA UPS Single Feed with Internal Batteries & MS Network/ModBus Card	9EA02GG05031003	208 or 220V	Single	21 / 47	53.5 x 20.9 x 31.5	1049	$22,150
20 kVA UPS Dual Feed with Internal Batteries	9EA02GG05002003	208 or 220V	Dual	21 / 47	53.5 x 20.9 x 31.5	1058	$21,900
20 kVA UPS Dual Feed with Internal Batteries & MS Network Card	9EA02GG05022003	208 or 220V	Dual	21 / 47	53.5 x 20.9 x 31.5	1058	$22,150
20 kVA UPS Dual Feed with Internal Batteries & MS Network/ModBus Card	9EA02GG05032003	208 or 220V	Dual	21 / 47	53.5 x 20.9 x 31.5	1058	$22,250
30 kVA (24 kW) With EBC runtime addition capability[2]							
30 kVA UPS Single Feed with Internal Batteries	9EA03GG05001003	208 or 220V	Single	12 / 30	53.5 x 20.9 x 31.5	1049	$23,500
30 kVA UPS Single Feed with Internal Batteries & MS Network Card	9EA03GG05021003	208 or 220V	Single	12 / 30	53.5 x 20.9 x 31.5	1049	$23,750
30 kVA UPS Single Feed with Internal Batteries & MS Network/ModBus Card	9EA03GG05031003	208 or 220V	Single	12 / 30	53.5 x 20.9 x 31.5	1049	$23,850
30 kVA UPS Dual Feed with Internal Batteries	9EA03GG05002003	208 or 220V	Dual	12 / 30	53.5 x 20.9 x 31.5	1058	$23,600
30 kVA UPS Dual Feed with Internal Batteries & MS Network Card	9EA03GG05022003	208 or 220V	Dual	12 / 30	53.5 x 20.9 x 31.5	1058	$23,850
30 kVA UPS Dual Feed with Internal Batteries & MS Network/ModBus Card	9EA03GG05032003	208 or 220V	Dual	12 / 30	53.5 x 20.9 x 31.5	1058	$23,950

EATON 93E UPS & ACCESSORIES

(continued)

93E (20-30 KVA) MAINTENANCE BYPASS OPTIONS: INTEGRATED ACCESSORY CABINETS - SIAC-B, IAC-B and WALL MOUNT BYPASS CABINETS

Description	Part Number	Input/Output Voltage	Input Feed	Installation Location	Dimensions (H x W x D, inches)	Weight (lb)	List Price
93E 20-30 kVA SIAC-B - Slim line Bypass for Single Feed Units (right)	9EZHA1010000000	208 or 220V	Single	Right	53.5 x 8.0 x 31.5	165	$3,600
93E 20-30 kVA SIAC-B - Slim line Bypass for Single Feed Units (left)[3]	9EZHA1020000000	208 or 220V	Single	Left	53.5 x 8.0 x 31.5	165	$3,600
93E 20-30 kVA SIAC-B - Slim line Bypass for Dual Feed Units (right)	9EZHA2010000000	208 or 220V	Dual	Right	53.5 x 8.0 x 31.5	178	$4,000
93E 20-30 kVA SIAC-B - Slim line Bypass for Dual Feed Units (left)[3]	9EZHA2020000000	208 or 220V	Dual	Left	53.5 x 8.0 x 31.5	178	$4,000
93E 20-30 kVA IAC-B - Maintenance Bypass for Single Feed Units (full width)	9EZBA1000000000	208 or 220V	Single	Either	53.5 x 20.9 x 31.5	237	$7,100
93E 20-30 kVA IAC-B - Maintenance Bypass for Dual Feed Units (full width)	9EZBA2000000000	208 or 220V	Dual	Either	53.5 x 20.9 x 31.5	237	$7,300
93E 20-30 kVA Wall Mount Maintenance Bypass Panel[4]	M1BAAX0X1XXXXXX	208 or 220V	Single[3]	Wall	57.0 x 24.0 x 11.3	400	$5,400
93E 20-30 kVA Wall Mount Maintenance Bypass Panel With 36 Pole Distribution[7]	M9EZGA110000000	208 or 220V	Single[3]	Wall	73.5 x 24.0 x 11.3	400	$5,800

93E (20-30 KVA) TRANSFORMER OPTIONS: INTEGRATED TRANSFORMER CABINET - (ITC)

Description	Part Number	Input/Output Voltage	Input Feed	Installation Location	Dimensions (H x W x D, inches)	Weight (lb)	List Price
93E 20-30 kVA IAC - 480V input transformer, Single Transformer[5]	9EZFAA000000000	480/208V	Single	Line and match	53.5 x 20.9 x 31.5	496	$7,400
93E 20-30 kVA IAC - 480V input, 480V output Dual Transformers[5]	9EZFAB000000000	480/480V	Single	Line and match	53.5 x 20.9 x 31.5	834	$9,900

93E (20-30 KVA) POWER DISTRIBUTION OPTIONS: INTEGRATED ACCESSORY CABINET - DISTRIBUTION - IAC-D

Description	Part Number	Input Voltage	Subfeed #1 Rating	Subfeed #2 Rating	Subfeed #3 Rating	Dimensions (H x W x D, inches)	Weight (lb)	List Price
93E 20-30 kVA IAC-D - W/42-pole Dist Panelboard and No Subfeed Breakers[5,7]	9EZDA0000000000	208 or 220V	None	None	None	53.5 x 20.9 x 31.5	238	$8,000
93E 20-30 kVA IAC-D - W/42-pole Dist Panelboard 1-125A Subfeed BRKR[5,7]	9EZDAA000000000	208 or 220V	125A	None	None	53.5 x 20.9 x 31.5	258	$8,500
93E 20-30 kVA IAC-D - W/42-pole Dist Panelboard 2-125A Subfeed BRKR[5,7]	9EZDAAA00000000	208 or 220V	125A	125A	None	53.5 x 20.9 x 31.5	278	$9,000
93E 20-30 kVA IAC-D - W/42-pole Dist Panelboard 3-125A Subfeed BRKR[5,7]	9EZDAAAA0000000	208 or 220V	125A	125A	125A	53.5 x 20.9 x 31.5	298	$9,500

Subfeed Breaker Options

Subfeed breakers are also available in 60A and 40A ratings	Breaker Trip Rating changes	Original	New	Pricing change
Subfeed #1 = Part number digit 6 (9EZDA"**A**"000000000)	From 125A to 60A	A	B	None
Subfeed #2 = Part number digit 7 (9EZDAA"**A**"00000000)	From 125A to 40A	A	C	None
Subfeed #3 = Part number digit 8 (9EZDAAA"**A**"0000000)				

93E (20-30 KVA) PARALLELING CABINET OPTIONS: INTEGRATED ACCESSORY CABINET - TIE & BYPASS IAC-TB or TIE ONLY - IAC-T and WALL MOUNT CABINETS

Description	Part Number	Input/Output Voltage	Output Rating	Breaker Ratings (Qty)	Dimensions (H x W x D, inches)	Weight (lb)	List Price
93E 20-30 kVA IAC-TB - Tie/Bypass for 1+1 Redundant with Maintenance Bypass	9EZCA0100000000	208 or 220V	30kVA	125A (4)	53.5 x 20.9 x 31.5	326	$9,800
93E 20-30 kVA IAC-TB - Tie/Bypass for 2+0 Capacity with Maintenance Bypass	9EZCA0200000000	208 or 220V	60kVA	125A (2)/250A (2)	53.5 x 20.9 x 31.5	326	$10,500
93E 20-30 kVA IAC-T - Tie for up to 3+1 Redundant system	9EZEA0400000000	208 or 220V	90kVA	125A (4)	53.5 x 20.9 x 31.5	375	$11,000
93E 20-30 90 kVA Wall Mount Maintenance Bypass Panel	M1BI0X0X1XXXXXX	208 or 220V	90kVA	400A (2)	57.0 x 24.0 x 11.3	350	$8,000
93E 20-30 90 kVA Wall Mount Maintenance Bypass Panel With 36 Pole Distribution[7]	M9EZGA310000000	208 or 220V	90kVA	400A (2)	57.0 x 24.0 x 11.3	350	$9,000

EATON 93E UPS & ACCESSORIES

(continued)

93E (20-30 KVA) EXTENDED BATTERY CABINET OPTIONS

Description	Part Number	Number of Batteries	DC Voltage	Number of Strings	Dimensions (H x W x D, inches)	Weight (lb)	List Price
93E 20-30 kVA Extended Battery Cabinet[6]	9EZAAB000000000	36	216V	2	53.5 x 20.9 x 31.5	1182	$10,300
93E 20-30 kVA Extended Battery Cabinet[6]	9EZAAC000000000	54	216V	3	53.5 x 20.9 x 31.5	1585	$13,500

Notes:

1. Contact service for information on kVA upgrade kits
2. External battery cabinet (EBC) can be added at any time, however requires authorized service
3. Eaton recommends you use a left side SAIC-B if Extended battery cabinets (EBC) are to be installed
4. Wall mount bypass are three-breaker type, therefore for dual feed, separate feed will be required to be supplied by others to feed rectifier
5. Mount Transformer or IDC cabinets on the same side as SAIC-B cabinet
6. Maximum of 2 Extended Battery Cabinets can be bought for a system. See runtime chart.
7. Distribution breakers for 36 pole panel are Eaton type BAB or QBH

93E 20 kVA BATTERY RUNTIME CHART

UPS Part No	9EF------	UPS Part No	9EA------	9EA------	9EA------	9EA------	9EA------
EBC		EBC		9EZAAB----	9EZAAC----	9EZAAB----	9EZAAC----
% Load on UPS	Internal Battery	% Load on UPS	Internal Battery	Qty 1	Qty 1	Qty 2	Qty 2
100%	12	100%	21	55	74	95	138
90%	14	90%	24	71	95	122	177
80%	17	80%	27	81	109	139	203
75%	18	75%	30	87	118	150	219
70%	19	70%	32	95	128	163	237
67%	21	67%	34	100	135	172	251
60%	23	60%	38	113	152	194	283
50%	28	50%	47	139	187	239	348
40%	37	40%	60	179	242	309	450
30%	51	30%	84	250	338	431	-
25%	63	25%	103	310	419	-	-
20%	81	20%	134	403	-	-	-
10%	185	10%	305	-	-	-	-

93E 30 kVA BATTERY RUNTIME CHART

UPS Part No	9EA------	9EA------	9EA------	9EA------	9EA------
EBC		9EZAAB----	9EZAAC----	9EZAAB----	9EZAAC----
% Load on UPS	Internal Battery	Qty 1	Qty 1	Qty 2	Qty 2
100%	12	33	45	58	84
90%	14	38	51	68	95
80%	17	44	59	76	110
75%	18	48	64	82	119
70%	20	52	70	89	130
67%	21	55	74	95	138
60%	24	62	84	107	157
50%	30	77	104	133	194
40%	38	100	135	172	251
30%	53	139	187	239	348
25%	65	171	231	294	429
20%	84	221	299	381	-
10%	188	-	-	-	-

Note: Backup times are approximate and may vary with equipment, configuration, battery age, temperature, etc.

EATON 93E UPS & ACCESSORIES

(continued)

93E 40 and 60 KVA UPS MODELS (50/60 Hz)

Description	Part Number	Input/Output Voltage	Input Feed	Internal Runtime (min) Load 100%/50%	Dimensions (H x W x D, inches)	Weight (lb)	List Price
40 kVA (32 kW) Requires hardware to upgrade to 60 kVA or add EBCs[1]							
40 kVA UPS Single Feed with Internal Batteries	9EG04GG03001003	208 or 220V	Single	7 / 20	74.0 x 23.6 x 31.5	1301	$36,000
40 kVA UPS Single Feed with Internal Batteries & MS Network Card	9EG04GG03021003	208 or 220V	Single	7 / 20	74.0 x 23.6 x 31.5	1301	$36,250
40 kVA UPS Single Feed with Internal Batteries & MS Network/ModBus Card	9EG04GG03031003	208 or 220V	Single	7 / 20	74.0 x 23.6 x 31.5	1301	$36,350
40 kVA UPS Dual Feed with Internal Batteries	9EG04GG03002003	208 or 220V	Dual	7 / 20	74.0 x 23.6 x 31.5	1315	$36,100
40 kVA UPS Dual Feed with Internal Batteries & MS Network Card	9EG04GG03022003	208 or 220V	Dual	7 / 20	74.0 x 23.6 x 31.5	1315	$36,350
40 kVA UPS Dual Feed with Internal Batteries & MS Network/ModBus Card	9EG04GG03032003	208 or 220V	Dual	7 / 20	74.0 x 23.6 x 31.5	1315	$36,450
40 kVA (32 kW) Upgrade to 60 kVA by Firmware, EBC capable[2]							
40 kVA UPS Single Feed with Internal Batteries	9EB04GG05001003	208 or 220V	Single	12 / 29	74.0 x 23.6 x 31.5	1499	$38,500
40 kVA UPS Single Feed with Internal Batteries & MS Network Card	9EB04GG05021003	208 or 220V	Single	12 / 29	74.0 x 23.6 x 31.5	1499	$38,750
40 kVA UPS Single Feed with Internal Batteries & MS Network/ModBus Card	9EB04GG05031003	208 or 220V	Single	12 / 29	74.0 x 23.6 x 31.5	1499	$38,850
40 kVA UPS Dual Feed with Internal Batteries	9EB04GG05002003	208 or 220V	Dual	12 / 29	74.0 x 23.6 x 31.5	1513	$38,600
40 kVA UPS Dual Feed with Internal Batteries & MS Network Card	9EB04GG05022003	208 or 220V	Dual	12 / 29	74.0 x 23.6 x 31.5	1513	$38,850
40 kVA UPS Dual Feed with Internal Batteries & MS Network/ModBus Card	9EB04GG05032003	208 or 220V	Dual	12 / 29	74.0 x 23.6 x 31.5	1513	$38,950
60 kVA (48 kW) With EBC runtime addition capability[2]							
60 kVA UPS Single Feed with Internal Batteries	9EB06GG05001003	208 or 220V	Single	6.6 / 18	74.0 x 23.6 x 31.5	1499	$43,000
60 kVA UPS Single Feed with Internal Batteries & MS Network Card	9EB06GG05021003	208 or 220V	Single	6.6 / 18	74.0 x 23.6 x 31.5	1499	$43,250
60 kVA UPS Single Feed with Internal Batteries & MS Network/ModBus Card	9EB06GG05031003	208 or 220V	Single	6.6 / 18	74.0 x 23.6 x 31.5	1499	$43,350
60 kVA UPS Dual Feed with Internal Batteries	9EB06GG05002003	208 or 220V	Dual	6.6 / 18	74.0 x 23.6 x 31.5	1513	$43,100
60 kVA UPS Dual Feed with Internal Batteries & MS Network Card	9EB06GG05022003	208 or 220V	Dual	6.6 / 18	74.0 x 23.6 x 31.5	1513	$43,350
60 kVA UPS Dual Feed with Internal Batteries & MS Network/ModBus Card	9EB06GG05032003	208 or 220V	Dual	6.6 / 18	74.0 x 23.6 x 31.5	1513	$43,450

93E (40-60 KVA) MAINTENANCE BYPASS OPTIONS: INTEGRATED ACCESSORY CABINETS - SIAC-B, IAC-B and WALL MOUNT BYPASS CABINETS

Description	Part Number	Input/Output Voltage	Input Feed	Installation Location	Dimensions (H x W x D, inches)	Weight (lb)	List Price
93E 40-60 kVA SIAC-B - Slim line Bypass for Single Feed Units (right)	9EZHB1010000000	208 or 220V	Single	Right	74.0 x 8.0 x 31.5	252	$4,900
93E 40-60 kVA SIAC-B - Slim line Bypass for Single Feed Units (left)[3]	9EZHB1020000000	208 or 220V	Single	Left	74.0 x 8.0 x 31.5	252	$4,900
93E 40-60 kVA SIAC-B - Slim line Bypass for Dual Feed Units (right)	9EZHB2010000000	208 or 220V	Dual	Right	74.0 x 8.0 x 31.5	277	$5,500
93E 40-60 kVA SIAC-B - Slim line Bypass for Dual Feed Units (left)[3]	9EZHB2020000000	208 or 220V	Dual	Left	74.0 x 8.0 x 31.5	277	$5,500
93E 40-60 kVA IAC-B - Maintenance Bypass for Single Feed Units (full width)	9EZBB1000000000	208 or 220V	Single	Either	74.0 x 20.9 x 31.5	334	$9,500
93E 40-60 kVA IAC-B - Maintenance Bypass for Dual Feed Units (full width)	9EZBB2000000000	208 or 220V	Dual	Either	74.0 x 20.9 x 31.5	364	$9,900
93E 40-60 kVA Wall Mount Maintenance Bypass Panel[4]	M1BFFX0X1XXXXXX	208 or 220V	Single[3]	Wall	57.0 x 24.0 x 11.3	700	$8,000
93E 40-60 kVA Wall Mount Maintenance Bypass Panel With 36 Pole Distribution[7]	M9EZGB110000000	208 or 220V	Single[3]	Wall	90.0 x 24.0 x 11.3	725	$9,000

EATON 93E UPS & ACCESSORIES

(continued)

93E (40-60 KVA) TRANSFORMER OPTIONS: INTEGRATED TRANSFORMER CABINET - (ITC)

Description	Part Number	Input/Output Voltage	Input Feed	Installation Location	Dimensions (H x W x D, inches)	Weight (lb)	List Price
93E 40-60 kVA IAC - 480V input transformer, Single Transformer[5]	9EZFBA000000000	480/208V	Single	Line and match	74.0 x 31.3 x 31.5	918	$11,400
93E 40-60 kVA IAC - 480V input, 480V output Dual Transformers[5]	9EZFBB000000000	480/480V	Single	Line and match	74.0 x 31.3 x 31.5	1446	$14,400

93E (40-60 KVA) POWER DISTRIBUTION OPTIONS: INTEGRATED ACCESSORY CABINET - DISTRIBUTION - IAC-D

Description	Part Number	Input Voltage	Subfeed #1 Rating	Subfeed #2 Rating	Subfeed #3 Rating	Dimensions (H x W x D, inches)	Weight (lb)	List Price
93E 40-60 kVA IAC-D - W/42-pole Dist Panelboard and No Subfeed Breakers[5,7]	9EZDB0000000000	208 or 220V	None	None	None	74.0 x 20.9 x 31.5	315	$8,500
93E 40-60 kVA IAC-D - W/42-pole Dist Panelboard 1-250A Subfeed BRKR[5,7]	9EZDBA000000000	208 or 220V	250A	None	None	74.0 x 20.9 x 31.5	258	$9,100
93E 40-60 kVA IAC-D - W/42-pole Dist Panelboard 2-250A Subfeed BRKR[5,7]	9EZDBAA00000000	208 or 220V	250A	250A	None	74.0 x 20.9 x 31.5	278	$9,700
93E 40-60 kVA IAC-D - W/42-pole Dist Panelboard 3-250A Subfeed BRKR[5,7]	9EZDBAAA0000000	208 or 220V	250A	250A	250A	74.0 x 20.9 x 31.5	298	$10,300

Subfeed Breaker Options

Subfeed breakers are also available in 125A and 80A ratings	Breaker Trip Rating changes	Original	New	Pricing change
Subfeed #1 = Part number digit 6 (9EZDA"**A**"000000000)	From 250A to 125A	A	B	None
Subfeed #2 = Part number digit 7 (9EZDAA"**A**"00000000)	From 250A to 80A	A	C	None
Subfeed #3 = Part number digit 8 (9EZDAAA"**A**"0000000)				

93E (40-60 KVA) PARALLELING CABINET OPTIONS: INTEGRATED ACCESSORY CABINET - TIE & BYPASS IAC-TB or TIE ONLY - IAC-T and WALL MOUNT CABINETS

Description	Part Number	Input/Output Voltage	Output Rating	Breaker Ratings (Qty)	Dimensions (H x W x D, inches)	Weight (lb)	List Price
93E 40-60 kVA IAC-TB - Tie/Bypass for 1+1 Redundant with Maintenance Bypass	9EZCB0100000000	208 or 220V	60kVA	250A (4)	74.0 x 20.9 x 31.5	350	$13,000
93E 40-60 kVA IAC-TB - Tie/Bypass for 2+0 Capacity with Maintenance Bypass	9EZCB0200000000	208 or 220V	120kVA	250A (2) /500A (2)	74.0 x 20.9 x 31.5	456	$15,000
93E 40-60 kVA IAC-T - Tie for up to 3+1 Redundant system	9EZEB0400000000	208 or 220V	180kVA	250A (4)	74.0 x 20.9 x 31.5	404	$16,000
93E 40-60 180 kVA Wall Mount Maintenance Bypass Panel	M1BN0X0X1XXXXXX	208 or 220V	180kVA	800A (2)	73.5 x 24.0 x 11.3	350	$15,500
93E 40-60 180 kVA Wall Mount Maintenance Bypass Panel With 36 Pole Distribution[7]	M9EZGB310000000	208 or 220V	180kVA	800A (2)	90.0 x 36.0 x 11.3	550	$16,500

93E (40-60 KVA) EXTENDED BATTERY CABINET OPTIONS

Description	Part Number	Number of Batteries	DC Voltage	Number of Strings	Dimensions (H x W x D, inches)	Weight (lb)	List Price
93E 40-60 kVA Extended Battery Cabinet[6]	9EZABB000000000	72	216V	4	74.0 x 31.3 x 31.5	2713	$20,000
93E 40-60 kVA Extended Battery Cabinet[6]	9EZABC000000000	108	216V	6	74.0 x 31.3 x 31.5	3117	$26,000

Notes:
1. Contact service for information on kVA upgrade kits
2. External battery cabinet (EBC) can be added at any time, however requires authorized service
3. Eaton recommends you use a left side SAIC-B if Extended battery cabinets (EBC) are to be installed
4. Wall mount bypass are three-breaker type, therefore for dual feed, separate feed will be required to be supplied by others to feed rectifier
5. Mount Transformer or IDC cabinets on the same side as SAIC-B cabinet
6. Maximum of 2 Extended Battery Cabinets can be bought for a system. See runtime chart.
7. Distribution breakers for 36 pole panel are Eaton type BAB or QBH

EATON 93E UPS & ACCESSORIES

(continued)

93E 40 kVA BATTERY RUNTIME CHART

UPS Part No	9EG------	UPS Part No	9EB------	9EB------	9EB------	9EB------	9EB------
EBC		EBC		9EZABB----	9EZABC----	9EZABB----	9EZABC----
% Load on UPS	Internal Battery	% Load on UPS	Internal Battery	Qty 1	Qty 1	Qty 2	Qty 2
100%	7	100%	12	46	65	85	128
90%	9	90%	14	52	73	96	146
80%	11	80%	17	60	85	111	168
75%	12	75%	18	65	92	120	181
70%	13	70%	19	70	99	130	197
67%	14	67%	21	74	105	138	209
60%	16	60%	23	84	119	156	236
50%	20	50%	29	104	147	193	291
40%	26	40%	37	134	190	249	376
30%	36	30%	52	186	263	345	-
25%	44	25%	64	228	324	425	-
20%	57	20%	82	295	418	-	-
10%	128	10%	183	-	-	-	-

93E 60 kVA BATTERY RUNTIME CHART

UPS Part No	9EB------	9EB------	9EB------	9EB------	9EB------
EBC		9EZAAB----	9EZAAC----	9EZAAB----	9EZAAC----
% Load on UPS	Internal Battery	Qty 1	Qty 1	Qty 2	Qty 2
100%	6.6	27	39	51	77
90%	7.7	31	44	58	88
80%	9.0	36	51	67	102
75%	10.0	39	56	73	111
70%	11.0	43	61	80	121
67%	12.0	46	65	85	128
60%	14.0	52	73	96	146
50%	18.0	65	92	120	181
40%	23.0	84	119	156	236
30%	33.0	117	166	217	329
25%	40.0	144	204	268	404
20%	52.0	186	263	345	-
10%	114.0	412	-	-	-

Note: Backup times are approximate and may vary with equipment, configuration, battery age, temperature, etc.

EATON 93PM UPS



Double-conversion (20–50 kW)

The Eaton 93PM UPS combines unprecedented efficiency, reliability, and vertical or horizontal scalability with eye-catching design. A space-saving, flexible device that's as easy to deploy as it is to manage, it's the perfect three-phase white or grey space solution for today's mission critical applications.

- Industry-leading efficiency at up to 97% in double conversion and 99.1% in ESS
- Unity power factor provides 100% real power in a small footprint
- Internal battery options support up to 50 kW of load
- Internal redundancy option offers ultimate reliability in a compact footprint and low cost
- Fully detachable sidecar options for pre-wired, true external maintenance bypass in a slim footprint
- Easy to manage with LCD color touchscreen interface and status-indicating LED bars
- Flexible and innovative thermal management configurations to accommodate in-row, wall, or aisle installations
- Easy to deploy with line & match accessory cabinets and a wide range of distribution options
- Includes on-site 7x24 startup
- Includes one year of eNotify remote monitoring service (requires connectivity parts and self-installation)

93PM (50 kW) BASE MODELS

Description	Part Number	Rating (kW)	Input/Ouput Voltage	Base Runtime (min)	Dimensions (H x W x D, inches)	Weight (lb)	List Price
93PM 50 kW UPS	9PA05D0000A00R2	50 kW	480/480	0	74.0 x 22.0 x 42.0	692	$36,365
93PM 50 kW UPS with internal batteries, 3 strings	9PA05D2000A00R2	50 kW	480/480	4.3	74.0 x 22.0 x 42.0	1485	$39,527
93PM 50 kW UPS with internal batteries, 4 strings	9PA05D4000A00R2	50 kW	480/480	6.7	74.0 x 22.0 x 42.0	1716	$40,580
93PM 50 kW UPS with internal batteries, 5 strings	9PA05D6000A00R2	50 kW	480/480	9.5	74.0 x 22.0 x 42.0	1947	$41,634
93PM 50 kW UPS, N+1 internal redundancy	9PC05D0000A00R2	50 kW	480/480	0	74.0 x 22.0 x 42.0	867	$43,072
93PM 50 kW UPS, N+1 internal redundancy with internal batteries, 3 strings	9PC05D2000A00R2	50 kW	480/480	4.3	74.0 x 22.0 x 42.0	1610	$46,233
Optional sidecar for top cable entry	(Change digit #11 in the UPS part number to "B")				74.0 x 8.0 x 42.0		$2,597
Optional sidecar for 3-breaker maintenance bypass	(Change digits #11-12 in the UPS part number to "E2")				74.0 x 8.0 x 42.0		$4,225
Optional internal rotary MBS	(Change digit #8 in the UPS part number to "1")						$1,700
Optional Energy Saver System (ESS)	(Change digit #9 in the UPS part number to "2")						$1,995

93PM (40 kW) BASE MODELS

Description	Part Number	Rating (kW)	Input/Ouput Voltage	Base Runtime (min)	Dimensions (H x W x D, inches)	Weight (lb)	List Price
93PM 40 kW UPS	9PA04D0000A00R2	40 kW	480/480	0	74.0 x 22.0 x 42.0	692	$34,013
93PM 40 kW UPS with internal batteries, 3 strings	9PA04D2000A00R2	40 kW	480/480	6.1	74.0 x 22.0 x 42.0	1485	$37,175
93PM 40 kW UPS with internal batteries, 4 strings	9PA04D4000A00R2	40 kW	480/480	9.4	74.0 x 22.0 x 42.0	1716	$38,228
93PM 40 kW UPS with internal batteries, 5 strings	9PA04D6000A00R2	40 kW	480/480	13.3	74.0 x 22.0 x 42.0	1947	$39,282
93PM 40 kW UPS, N+1 internal redundancy	9PC04D0000A00R2	40 kW	480/480	0	74.0 x 22.0 x 42.0	867	$40,820
93PM 40 kW UPS, N+1 internal redundancy with internal batteries, 3 strings	9PC04D2000A00R2	40 kW	480/480	6.1	74.0 x 22.0 x 42.0	1610	$43,881
Optional sidecar for top cable entry	(Change digit #11 in the UPS part number to "B")				74.0 x 8.0 x 42.0		$2,597
Optional sidecar for 3-breaker maintenance bypass	(Change digits #11-12 in the UPS part number to "E2")				74.0 x 8.0 x 42.0		$4,225
Optional internal rotary MBS	(Change digit #8 in the UPS part number to "1")						$1,700
Optional Energy Saver System (ESS)	(Change digit #9 in the UPS part number to "2")						$1,995

93PM (30 kW) BASE MODELS

Description	Part Number	Rating (kW)	Input/Ouput Voltage	Base Runtime (min)	Dimensions (H x W x D, inches)	Weight (lb)	List Price
93PM 30 kW UPS	9PA03D0000A00R2	30 kW	480/480	0	74.0 x 22.0 x 42.0	692	$32,427
93PM 30 kW UPS with internal batteries, 3 strings	9PA03D2000A00R2	30 kW	480/480	9.4	74.0 x 22.0 x 42.0	1485	$35,589
93PM 30 kW UPS with internal batteries, 4 strings	9PA03D4000A00R2	30 kW	480/480	14.6	74.0 x 22.0 x 42.0	1716	$36,643
93PM 30 kW UPS with internal batteries, 5 strings	9PA03D6000A00R2	30 kW	480/480	19.8	74.0 x 22.0 x 42.0	1947	$37,696
93PM 30 kW UPS, N+1 internal redundancy	9PC03D0000A00R2	30 kW	480/480	0	74.0 x 22.0 x 42.0	867	$39,134
93PM 30 kW UPS, N+1 internal redundancy with internal batteries, 3 strings	9PC03D2000A00R2	30 kW	480/480	9.4	74.0 x 22.0 x 42.0	1610	$42,296
Optional sidecar for top cable entry	(Change digit #11 in the UPS part number to "B")				74.0 x 8.0 x 42.0		$2,597
Optional sidecar for 3-breaker maintenance bypass	(Change digits #11-12 in the UPS part number to "E2")				74.0 x 8.0 x 42.0		$4,225

EATON 93PM UPS

(continued)

93PM (30 kW) BASE MODELS (CONTINUED)

Description	Part Number	Rating (kW)	Input/Ouput Voltage	Base Runtime (min)	Dimensions (H x W x D, inches)	Weight (lb)	List Price
Optional internal rotary MBS	(Change digit #8 in the UPS part number to "1")						$1,700
Optional Energy Saver System (ESS)	(Change digit #9 in the UPS part number to "2")						$1,995

93PM (20 kW) BASE MODELS

Description	Part Number	Rating (kW)	Input/Ouput Voltage	Base Runtime (min)	Dimensions (H x W x D, inches)	Weight (lb)	List Price
93PM 20 kW UPS	9PA02D0000A00R2	20 kW	480/480	0	74.0 x 22.0 x 42.0	692	$30,835
93PM 20 kW UPS with internal batteries, 3 strings	9PA02D2000A00R2	20 kW	480/480	17.3	74.0 x 22.0 x 42.0	1485	$33,996
93PM 20 kW UPS with internal batteries, 4 strings	9PA02D4000A00R2	20 kW	480/480	24.6	74.0 x 22.0 x 42.0	1716	$35,050
93PM 20 kW UPS with internal batteries, 5 strings	9PA02D6000A00R2	20 kW	480/480	32.3	74.0 x 22.0 x 42.0	1947	$36,104
93PM 20 kW UPS, N+1 internal redundancy	9PC02D0000A00R2	20 kW	480/480	0	74.0 x 22.0 x 42.0	867	$37,542
93PM 20 kW UPS, N+1 internal redundancy with internal batteries, 3 strings	9PC02D2000A00R2	20 kW	480/480	17.3	74.0 x 22.0 x 42.0	1610	$40,703
Optional sidecar for top cable entry	(Change digit #11 in the UPS part number to "B")				74.0 x 8.0 x 42.0		$2,597
Optional sidecar for 3-breaker maintenance bypass	(Change digits #11-12 in the UPS part number to "E2")				74.0 x 8.0 x 42.0		$4,225
Optional internal rotary MBS	(Change digit #8 in the UPS part number to "1")						$1,700
Optional Energy Saver System (ESS)	(Change digit #9 in the UPS part number to "2")						$1,995

UPS Order Notes

1. Top cable entry requires a sidecar for wire routing space. A 3-breaker maintenance bypass sidecar can be used for top cable entry.
2. All weights are installed weight; add 65 lbs for shipping weight.
3. All units are parallel capable. Hot Sync is included in all models as standard.

93PM INTEGRATED ACCESSORY CABINETS

Description	Part Number	Input/Ouput Voltage	Dimensions (H x W x D, inches)	Weight (lb)	List Price
IAC-Distribution, 208V system input autotransformer, K13 iso output transformer with (1) 250A adjustable distribution breaker	9PZN1S100000001	208/208	74.0 x 31.3 x 42.0	1538.8	$17,253
IAC-Distribution, 208V system input autotransformer, K13 iso output transformer with (1) 42-pole distribution panel	9PZN1SB00000001	208/208	74.0 x 31.3 x 42.0	1538.8	$18,200
IAC-Distribution, K-13 iso output transformer with 250A adjustable distribution breaker	9PZD2S100000001	480/208	74.0 x 31.3 x 42.0	1148.6	$10,809
IAC-Distribution, K-13 TP1 iso output transformer with 250A adjustable distribution breaker	9PZD4S100000001	480/208	74.0 x 31.3 x 42.0	1148.6	$11,550
IAC-Distribution, K-13 iso output transformer with (2) 42-pole distribution panels	9PZD2SBB0000001	480/208	74.0 x 31.3 x 42.0	1148.6	$13,815
IAC-Distribution, K-13 TP1 iso output transformer with (2) 42-pole distribution panels	9PZD4SBB0000001	480/208	74.0 x 31.3 x 42.0	1148.6	$14,556
IAC-Distribution, K-13 iso output transformer with (1) 42-pole distribution panel & (1) 250A adjustable distribution breaker	9PZD2SB10000001	480/208	74.0 x 31.3 x 42.0	1148.6	$12,868
IAC-Distribution, K-13 TP1 iso output transformer with (1) 42-pole distribution panel & (1) 250A adjustable distribution breaker	9PZD4SB10000001	480/208	74.0 x 31.3 x 42.0	1148.6	$13,609
IAC-Tie, (2) MOBs for 1+1 parallel redundant with 3-breaker maintenance bypass	9PZMBA200000000	480/480	74.0 x 19.7 x 42.0	458	$9,206
IAC-Tie, (2) MOBs for 2+0 parallel capacity with 3-breaker maintenance bypass	9PZMBB200000000	480/480	74.0 x 19.7 x 42.0	458	$9,625
IAC-Tie, (3) MOBs for 2+1 parallel redundant with 3-breaker maintenance bypass	9PZMBC200000000	480/480	74.0 x 19.7 x 42.0	458	$9,984
IAC-Tie, (3) MOBs for 3+0 parallel capacity with 3-breaker maintenance bypass	9PZMBD200000000	480/480	74.0 x 19.7 x 42.0	458	$13,280
IAC-Tie, (4) MOBs for 3+1 parallel redundant with 3-breaker maintenance bypass	9PZMBE200000000	480/480	74.0 x 19.7 x 42.0	458	$13,640
IAC-Tie, (4) MOBs for 4+0 parallel redundant with 3-breaker maintenance bypass	9PZMBF200000000	480/480	74.0 x 19.7 x 42.0	458	$13,853

IAC Order Notes

1. All weights are installed weight; add 65 lbs for shipping weight.
2. Panels are PRL1a; use BAB or QBHW bolt-on breakers.
3. Distribution breakers are JG3250 with trip settings of 250, 225, 200, 175, 160, 150, 125, 100A.
4. IAC-D 208/208V cabinet provides 3-wire 208V system input and 4-wire 208V system output. Single feed only. For UPS metering to reflect 208V, change UPS digit #6 in UPS part number to "P".

EATON 93PM UPS
(continued)

93PM INTEGRATED BATTERY CABINETS

Description	Part Number	Rating	Voltage	Base Runtime (min)	Dimensions (H x W x D, inches)	Weight (lb)	List Price
IBC-S, one battery string	9PZBBAY08010000	216 cell	432V Link	2.3	74.0 x 19.7 x 42.0	2395	$13,668
IBC-S, two battery strings	9PZBBAY08012000	432 cell	432V Link	6.5	74.0 x 19.7 x 42.0	3580	$16,581
IBC-S, three battery strings	9PZBBAY08013000	648 cell	432V Link	12.1	74.0 x 19.7 x 42.0	2405	$19,494

IBC Order Notes

1. All weights are installed weight; add 48 lbs to determine shipping weight.

MISCELLANEOUS PARTS

Part Number	Description	List Price
103006244	Wall-mount REPO switch	$426
P-116000035	Power Xpert Gateway Mini-slot communication card	$590
P-116000059	Industrial Relay Mini-slot card	$590

Order Notes

1. UPS EPO is selectable as N/O or N/C.

EATON 9390IT UPS

Powerware series

Double-conversion



- All-in-one, space efficient, completely integrated system with internal batteries (40 kVA) and distribution delivers optimal end-of-row data center solution
- Industry leading power density, providing up to 23 percent more power capacity in a compact all-in-one tower with internal batteries
- **Industry's smallest footprint at 40 kVA, providing up to a 61 percent footprint reduction**
- Scalable 40 kVA modular building block, allowing for cost-effective expansion to 80 kVA with an on-board tie cabinet and 160 kVA with a four-module tie cabinet
- Up to 40 percent more STANDARD runtime, eliminating the need for external battery cabinets
- On-board pre-wired maintenance bypass and integrated distribution cabinets provide greater redundancy and reduce installation and maintenance costs
- Reduced footprint extended run modules for longer runtime applications
- Inherently 208 or 480 Vac-capable with no transformers
- Patented Powerware Hot Sync® paralleling technology enables paralleling of up to four 9390 UPSs for additional capacity or redundancy
- Power management software suite includes applications for remote UPS monitoring, management and shutdown to help insure system and data integrity
- Includes Eaton Saver System, ESS
- Factory startup (5x8) included standard on all models; one-year parts warranty, 90-day labor warranty from startup date; two-year battery warranty on internal batteries
- 9390IT with distribution from 40-160 kVA (standalone units only)
- Includes on-site 5x8 startup and operator training by Eaton field technician
- Includes one year of eNotify remote monitoring service (requires connectivity parts and self installation)

9390IT (40 kVA) BASE MODELS

Part Number	Description	Rating (kVA/kW)	Input/Output Voltage	Base Run-time (min)	Dimensions (H x W x D, inches)	Weight (lb)	List Price
TA04A1001150010	9390IT 40 kVA UPS with internal batteries	40 kVA/36 kW	208/208	8	73.7 x 27.9 x 31.0	1,445	$38,540
TA04A1001180010	9390IT 40 kVA extended-run UPS module (no internal batteries)	40 kVA/36 kW	208/208	0	73.7 x 18.9 x 31.6	590	$35,152
TA04A1001153010	9390IT 40 kVA UPS with internal batteries and integrated three-breaker maintenance bypass sidecar (175A BIB, MBP, & MIS breakers)	40 kVA/36 kW	208/208	8	73.7 x 35.9 x 31.0	1,595	$43,090
TA04A1001183010	9390IT 40 kVA extended-run UPS module and integrated three-breaker maintenance bypass sidecar (175A BIB, MBP, & MIS breakers)	40 kVA/36 kW	208/208	0	73.7 x 26.9 x 31.6	740	$39,702
TA04A1001159010	9390IT 40 kVA UPS with internal batteries and two-system parallel tie sidecar (with output system load breaker)	40 kVA/36 kW	208/208	8	73.7 x 35.9 x 31.0	1,595	$43,090
TA04A1001189010	9390IT 40 kVA with two-system parallel tie sidecar (with output system load breaker and no internal batteries)	40 kVA/36 kW	208/208	0	73.7 x 26.9 x 31.6	740	$39,702

Order Notes

1. To order a parallel system, change digit 5 to a 2 and digit 7 or 8 (Can-Bridge Card) must also be 2.
2. On-board maintenance bypass side-car systems have 65 kAIC breakers @ 208 Vac and 35 kAIC breakes @ 480 Vac
3. For Load-sync Control, digit 15 must be a 2 and requires one wall-mounted control box for two systems--see miscellaneous
4. For runtimes exceeding 8 minutes, an extended Run-UPS BASE Module and battery cabinet is required

EATON 9390IT UPS

Powerware series *(continued)*

9390IT WITH DISTRIBUTION

Part Number	Description	Rating (kVA/kW)	Input/Output Voltage	Base Run-time (min)	Dimensions (H x W x D, inches)	Weight (lb)	List Price
TA04A100115K010	9390IT 40 kVA UPS with internal batteries and integrated IT distribution. Includes 12 / L6-30 receptacles with three breaker maintenance bypass (BIB, MBP, & MIS breakers)	40 kVA/36 kW	208/208	8	73.7 x 34.9 x 31.0	1,590	$48,722
TA04A100115P010	9390IT 40 kVA UPS with internal batteries and integrated IT distribution. Includes 6 / L21-30 receptacles with three breaker maintenance bypass (BIB, MBP, & MIS breakers)	40 kVA/36 kW	208/208	8	73.7 x 34.9 x 31.0	1,590	$46,599
TA04A100115R010	9390IT 40 kVA UPS with internal batteries and integrated IT distribution. Includes 4 / IEC309-60 receptacles with three breaker maintenance bypass (BIB, MBP, & MIS breakers)	40 kVA/36 kW	208/208	8	73.7 x 34.9 x 31.0	1,590	$49,604
TA04A100118K010	9390IT 40 kVA extended-run UPS module with integrated IT distribution. Includes 12 / L6-30 receptacles with three breaker maintenance bypass (BIB, MBP, & MIS breakers)	40 kVA/36 kW	208/208	-	73.7 x 26.9 x 31.0	735	$37,123
TA04A100118P010	9390IT 40 kVA extended-run UPS module with integrated IT distribution. Includes 6 / L21-30 receptacles with three breaker maintenance bypass (BIB, MBP, & MIS breakers)	40 kVA/36 kW	208/208	-	73.7 x 26.9 x 31.0	735	$35,000
TA04A100118R010	9390IT 40 kVA extended-run UPS module with integrated IT distribution. Includes 4 / IEC309-60 receptacles with three breaker maintenance bypass (BIB, MBP, & MIS breakers)	40 kVA/36 kW	208/208	-	73.7 x 26.9 x 31.0	735	$38,004
TE04A400118P010	9390IT 40 kVA extended-run UPS module with integrated IT distribution. Includes 4 / L22-30 receptacles with three breaker maintenance bypass (BIB, MBP, & MIS breakers)	40 kVA/36 kW	400/400	-	73.7 x 26.9 x 31.0	735	$47,780
TE04A400118R010	9390IT 40 kVA extended-run UPS module with integrated IT distribution. Includes 2 / IEC309-60 receptacles with three breaker maintenance bypass (BIB, MBP, & MIS breakers)	40 kVA/36 kW	400/400	-	73.7 x 26.9 x 31.0	735	$48,273
TB08A100118P010	9390IT 80 kVA extended-run UPS module with integrated IT distribution. Includes 12 / L21-30 receptacles with three breaker maintenance bypass (BIB, MBP, & MIS breakers)	80 kVA/72 kW	208/208	-	73.7 x 26.9 x 31.0	790	$60,570
TB08A100118R010	9390IT 80 kVA extended-run UPS module with integrated IT distribution. Includes 6 / IEC309-60 receptacles with three breaker maintenance bypass (BIB, MBP, & MIS breakers)	80 kVA/72 kW	208/208	-	73.7 x 26.9 x 31.0	790	$64,238
TF08A400118P010	9390IT 80 kVA extended-run UPS module with integrated IT distribution. Includes 6 / L22-30 receptacles with three breaker maintenance bypass (BIB, MBP, & MIS breakers)	80 kVA/72 kW	400/400	-	73.7 x 26.9 x 31.0	785	$62,917
TF08A400118R010	9390IT 80 kVA extended-run UPS module with integrated IT distribution. Includes 4 / IEC309-60 receptacles with three breaker maintenance bypass (BIB, MBP, & MIS breakers)	80 kVA/72 kW	400/400	-	73.7 x 26.9 x 31.0	785	$64,881
TG12A400118P010	9390IT 120 kVA extended-run UPS module with integrated IT distribution. Includes 9 / L22-30 receptacles with three breaker maintenance bypass (BIB, MBP, & MIS breakers)	120 kVA/108 kW	400/400	-	73.7 x 43.9 x 31.0	1,110	$70,658
TH16A400118R010	9390IT 160 kVA extended-run UPS module with integrated IT distribution. Includes 6 / IEC309-60 receptacles with three breaker maintenance bypass (BIB, MBP, & MIS breakers)	160 kVA/144 kW	400/400	-	73.7 x 43.9 x 31.0	1,200	$76,174

1. To order a parallel system, change digit 5 to a B and digit 7 or 8 (Can-Bridge Card) must also be 2. 2. On-board maintenance bypass side-car systems have 65 kAIC breakers @ 208 Vac and 35 kAIC breakes @ 480 Vac. 3. For Load-sync Control, digit 15 must be a 2 and requires one wall-mounted control box for two systems—see miscellaneous parts. 4. For runtimes exceeding 8 minutes, an extended Run-UPS BASE Module and battery cabinet is required

EATON 9390IT UPS

Powerware series *(continued)*

CONNECTIVITY OPTIONS

Description	CTO Part Number	List Price
HotSync CAN Bridge Card (required to obtain RS485 Port for RMP II/RIM II/SCM II)	103004336	$530
Power Xpert Gateway UPS Card	103007974-5591	$450
ModBus Communication Card	103002510-5501	$661
Standard Relay Card (<60 Vac rated, IBM AS/400)	1018460	$146
Industrial Relay and Display Drive Card X-Slot (5A @ 250 Vac)	103003055	$335

9390IT OPTIONS (40 kVA)

Part Number	Description	Input/Output Voltage	Dimensions (H x W x D, inches)	Weight (lb)	List Price
T04112000000001	IDC with MBS and output lugs	208/208	73.7 x 35.8 x 31.6	350	$7,392
T04112200000021	IDC with MBS, K-13 isolation transformer	208/208	73.7 x 35.8 x 31.6	1,350	$9,431
T04152200000021	IDC with MBS, K-13 isolation transformer	480/208	73.7 x 35.8 x 31.6	1,350	$10,103
T04112040000021	IDC with three-breaker MBS and 42-pole distribution panel	208/208	73.7 x 35.8 x 31.6	350	$9,451
T04112044000021	IDC with three-breaker MBS and (2) 42-pole distribution panels	208/208	73.7 x 35.8 x 31.6	350	$11,510
T04112041000021	IDC with three-breaker MBS, 42-pole distribution panel and (1) sub-feed breaker	208/208	73.7 x 35.8 x 31.6	350	$10,355
TP0442111100010	Parallel tie maintenance bypass cabinet, (4) UPS modules 120 kVA N+1, 160 kVA capacity (150A MOBs, 600A MIS, 600A MBP)	208/208	73.5 x 36.0 x 11.5	600	$13,656
TP0442211100010	Parallel tie maintenance bypass cabinet, (4) UPS modules 120 kVA N+1, 160 kVA capacity (70A MOBs, 250A MIS, 250A MBP)	480/480	57.0 x 24.0 x 11.5	600	$6,989

9390IT EXTENDED BATTERY OPTIONS

Part Number	Description	Rating	Input/Output Voltage	Base Run-time (min)	Dimensions (H x W x D, inches)	Weight (lb)	List Price
TS0403E20111100	40 kVA Extended-run battery cabinet	240 Cell	480V Link	26	73.7 x 22.5 x 31.6	2,395	$15,323
TL0403E33111100	40 kVA Extended-run battery cabinet	240 Cell	480V Link	49	73.7 x 42.7 x 31.6	3,580	$21,292
TS0803E20111100	80 kVA Extended-run battery cabinet	240 Cell	480V Link	7.6	73.7 x 22.5 x 31.6	2,405	$15,699
TL0803E33111100	80 kVA Extended-run battery cabinet	240 Cell	480V Link	18	73.7 x 42.7 x 31.6	3,590	$21,702
TL0803E50111100	80 kVA Extended-run battery cabinet	240 Cell	480V Link	33	73.7 x 42.7 x 31.6	4,835	$26,662
TL1203E28111100	120 kVA Extended-run battery cabinet	240 Cell	480V Link	7	73.7 x 42.7 x 31.6	3,245	$19,797
TL1203E28211100	120 kVA Extended-run battery cabinet	480 Cell	480V Link	24	73.7 x 85.4 x 31.6	6,490	$39,118
TL1203E50211100	120 kVA Extended-run battery cabinet	480 Cell	480V Link	45	73.7 x 85.4 x 31.6	9,670	$52,843
TL1603E39111100	160 kVA Extended-run battery cabinet	240 Cell	480V Link	6.6	73.7 x 42.7 x 31.6	3,920	$23,418
TL1603E33211100	160 kVA Extended-run battery cabinet	480 Cell	480V Link	18	73.7 x 85.4 x 31.6	7,180	$43,125
TL1603E50211100	160 kVA Extended-run battery cabinet	480 Cell	480V Link	33	73.7 x 85.4 x 31.6	9,670	$53,043

Order Notes

1. All weights are installed weight, add 65 lb to determine shipping weight
2. Main breaker feeds input of isolation transformer
3. All IDC cabinets listed above include three-breaker UPS wrap-around maintenance bypass switch
4. 42-pole load centers are Cutler-Hammer series, type PRL1A; use type BAB or QBHW bolt-on breakers
5. 40 kVA IDC uses 175A C-H type "JG" breakers at 208V and 70A C-H type "EG" breakers at 480V
6. All breakers have adjustable trip settings; please refer to the Installation Manual for details
7. For seismic zone 4 construction change digit 10 to 1
8. Cabinets ordered remotely will include only one set of side panels and no interconnect (battery cabinet to UPS or battery cabinet to battery

NON-MATCHING MAINTENANCE BYPASS PANELS (40 kVA)

Part Number	Description	Rating (amps)	Input/Output Voltage	Dimensions (H x W x D, inches)	Weight (lb)	List Price
M90BEA1XXX	Maintenance bypass, 208/208V, three-breaker 10 kAIC (225A MIS/MBP/BIB)	225	208/208	73.0 x 24.0 x 11.5	400	$4,503
M90BFA1XXX	Maintenance bypass, 208/208V, three-breaker 35 kAIC (175A MIS/MBP/BIB)	175	208/208	73.0 x 24.0 x 11.5	400	$4,295

EATON 9390IT UPS
Powerware series *(continued)*

NON-MATCHING MAINTENANCE BYPASS PANELS (40 kVA) *(continued)*

Part Number	Description	Rating (amps)	Input/Output Voltage	Dimensions (H x W x D, inches)	Weight (lb)	List Price
M90BGA1XXX	Maintenance bypass, 208/208V, three-breaker 65 kAIC (175A MIS/MBP/BIB)	175	208/208	73.0 x 24.0 x 11.5	400	$4,711
M90BEE1XXX	Maintenance bypass, 480/480V, three-breaker 10 kAIC (100A MIS/MBP/BIB)	100	480/480	73.0 x 24.0 x 11.5	400	$3,359
M90BFE1XXX	Maintenance bypass, 480/480V, three-breaker 35 kAIC (70A MIS/MBP/BIB)	70	480/480	73.0 x 24.0 x 11.5	400	$4,087
M90BGE1XXX	Maintenance bypass, 480/480V, three-breaker 65 kAIC (70A MIS/MBP/BIB)	70	480/480	73.0 x 24.0 x 11.5	400	$4,503

MISCELLANEOUS PARTS

Part Number	Description	List Price
103006244	REPO switch, wall-mount [1]	$426
103004223	Remote Monitor Panel "RMP II" [2]	$1,113
103004221	Relay Interface Module "RIM II" [2]	$1,092
103004222	Supervisory Contact Module "SCM II" [2]	$1,206
103007974-5591	Power Xpert Gateway UPS Card	$450
103004336	HotSync CAN Bridge Card, (used for paralleling units and/or RMP II/RIM II/SCM II interface) [3]	$530
103004179	9390 UPS/IDC seismic mounting kit [4]	$718
103001040	9390 output sync control box, 208 Vac	$11,336
103001041	9390 output sync control box, 480 Vac	$7,072
103003876	UPS/ battery cabinet/ IDC side panel kit	$738
152601664	Battery cabinet to battery cabinet interconnect cables (IBC-S cabinet)	$73
152601526	Battery cabinet to battery cabinet interconnect cables (IBC-L cabinet)	$73

Notes

1. UPS EPO is selectable as N/O or N/C. 2. Requires HotSync CAN Bridge Card to interface with these devices (only one CAN card required for up to four remote devices). Each UPM requires one card for paralleling. Same card can be used for communication to RS485 devices (RMP II, RIM II, SCM II). Remote devices (RMP II, RIM II, SCM II) require protected 120V AC source hardwired to the device. 3. HotSync CAN Bridge Card for parallel operation requires Eaton Service Engineer to configure. 4. 9390IT with internal batteries is not seismic rated. 40–80 kVA IDC Seismic kit cannot be installed in the field. Must be factory installed. Order via CTO.

9390IT BATTERY BACKUP TIMES (in minutes)*

Load (VA/Watts)	UPS w/Internal Battery
40,000 / 36,000	8.3
36,000 / 32,400	9.9
32,000 / 28,800	11.7
28,000 / 25,200	14.5
24,000 / 21,600	17.2
20,000 / 18,000	21.8
16,000 / 14,400	30.1
12,000 / 10,800	42.7
8,000 / 7,200	60.0
4,000 / 3,600	86.5

* Battery backup times are approximate and may vary with equipment, configuration, battery age, temperature, etc.

POWER-SUPPRESS 100 and POWER-SUPPRESS T7

Ultra-isolator Noise Suppressor and Isolation Provider

The Power-Suppress 100 offers the following advanced features:

- Traps unwanted harmonics
- Removes surge voltages and minimizes reflected THD
- Eliminates load generated feedback
- Available in both hardwired or line cord/receptacle models
- Fast and easy installation
- Long life operation
- Small footprint—saves valuable space
- Meets FCC Category A
- UL 1012, cUL, UL 1449

The Power-Suppress T7 provides these features

- Traps unwanted harmonics
- 20,000,000:1 (146 dB) common-mode reduction
- Normal-mode noise reduction
- Transient suppression system with status indicators
- Exclusive shielding
- K-20 rated
- Over-temperature protection
- Clean, noise-free power output
- High efficiency
- Fast, easy installation
- UL and cUL listed requirements

POWER-SUPPRESS 100: 500 to 7500 VA

Catalog Number	Style Number	Description	Input/Output Voltage	Dimensions (H x W x D, inches)	Weight (lb)	List Price
Line-cord/receptacle models						
T100R-0500	T100R-0500	PWR SUPPRESS T100 RCPT 500 VA	120V IN, 120V OUT	6.5 x 6.1 x 12.0	22	$833
T100R-0750	T100R-0750	PWR SUPPRESS T100 RCPT 750 VA	120V IN, 120V OUT	6.5 x 6.1 x 12.0	28	$890
T100R-1000	T100R-1000	PWR SUPPRESS T100 RCPT 1000 VA	120V IN, 120V OUT	6.5 x 6.1 x 12.0	31	$903
T100R-1800	T100R-1800	PWR SUPPRESS T100 RCPT 1800 VA	120V IN, 120V OUT	10.5 x 11.1 x 17.0	54	$1,196
T100R-2400	T100R-2400	PWR SUPPRESS T100 RCPT 2400 VA	120V IN, 120V OUT	10.5 x 11.1 x 17.0	58	$1,356
Terminal style models						
T100H-0500	T100H-0500	PWR SUPPRESS T100 HW 500 VA	120/240V IN, 120/240V OUT	6.4 x 6.1 x 12.0	22	$851
T100H-0750	T100H-0750	PWR SUPPRESS T100 HW 750 VA	120/240V IN, 120/240V OUT	6.4 x 6.1 x 12.0	28	$898
T100H-1000	T100H-1000	PWR SUPPRESS T100 HW 1000 VA	120/240V IN, 120/240V OUT	6.4 x 6.1 x 12.0	31	$914
T100H-1800	T100H-1800	PWR SUPPRESS T100 HW 1800 VA	120/240V IN, 120/240V OUT	10.3 x 11.1 x 17.0	54	$1,073
T100H-2500	T100H-2500	PWR SUPPRESS T100 HW 2500 VA	120/240V IN, 120/240V OUT	10.3 x 11.1 x 17.0	58	$1,324
T100H-5000	T100H-5000	PWR SUPPRESS T100 HW 5000 VA	120/240V IN, 120/240V OUT	10.3 x 11.1 x 17.0	86	$1,929
T100H-5001*	T100H-5001	PWR SUPPRESS T100 HW V 5000 VA	240/480V IN, 120/240V OUT	10.3 x 11.1 x 17.0	92	$2,334
T100H-7500	T100H-7500	PWR SUPPRESS T100 HW 7500 VA	120/240V IN, 120/240V OUT	10.3 x 11.1 x 17.0	116	$2,341
T100H-7501*	T100H-7501	PWR SUPPRESS T100 HW 7500 VA	240/480V IN, 120/240V OUT	10.3 x 11.1 x 17.0	111	$2,833

* Please note the higher input voltage on these models

POWER-SUPPRESS T7: 15 to 225 kVA

Catalog Number	Style Number	Description	Dimensions (H x W x D, inches)	Weight (lb)	List Price
T7H208-15K	97201-31	PWR SUPPRESS T7 208/208V 15 kVA	31 x 35 x 18	420	$10,770
T7H208-30K	97203-31	PWR SUPPRESS T7 208/208V 30 kVA	31 x 35 x 18	490	$11,000
T7H208-50K	97205-31	PWR SUPPRESS T7 208/208V 50 kVA	43 x 43 x 22	710	$12,810
T7H208-75K	97207-31	PWR SUPPRESS T7 208/208V 75 kVA	43 x 43 x 22	950	$15,150
T7H480-125K	97412-31	PWR SUPPRESS T7 480/208V 125 kVA	43 x 43 x 22	1,140	$21,100
T7H480-150K	97415-31	PWR SUPPRESS T7 480/208V 150 kVA	43 x 43 x 22	1,240	$22,540
T7H480-15K	97401-31	PWR SUPPRESS T7 480/208V 15 kVA	35 x 31 x 18	420	$12,110
T7H480-225K	97422-31	PWR SUPPRESS T7 480/208V 225 kVA	55 x 47 x 28	1,780	$26,510
T7H480-30K	97403-31	PWR SUPPRESS T7 480/208V 30 kVA	35 x 31 x 18	490	$11,720
T7H480-50K	97405-31	PWR SUPPRESS T7 480/208V 50 kVA	43 x 43 x 22	710	$12,990
T7H480-75K	97407-31	PWR SUPPRESS T7 480/208V 75 kVA	43 x 43 x 22	810	$16,160

POWER-SURE 700

The Power-Sure 700 provides intelligent protection for transmitters & industrial controls.

- Fast microprocessor controlled voltage regulation
- Tight output voltage regulation
- Zero-current switching
- Wide input regulation range
- Triple shielded, computer grade transformer
- Highly efficient—97% typical
- High inrush capability
- Transient protection and high frequency filter
- Includes input circuit breaker
- Manual bypass switch

  Optional 10-45 kVA

  Standard 50+ kVA

POWER-SURE 700 POWER CONDITIONERS: 208/208V

Catalog Number	Style Number	Description	Dimensions** (H x W x D, inches)	Weight (lb)	List Price
TBL-010K-6	TBL-010K-6	PWRSURE 700 208/208V 10 kVA	30.2 x 22.2 x 29.0	440	$16,855
TBL-015K-6	TBL-015K-6	PWRSURE 700 208/208V 15 kVA	30.2 x 22.2 x 29.0	520	$18,240
TBL-025K-6	TBL-025K-6	PWRSURE 700 208/208V 25 kVA	44.2 x 22.2 x 29.0	700	$26,305
TBL-030K-6	TBL-030K-6	PWRSURE 700 208/208V 30 kVA	44.2 x 22.2 x 29.0	720	$22,780
TBL-045K-6	TBL-045K-6	PWRSURE 700 208/208V 45 kVA	44.3 x 45.9 x 29.0	950	$28,385
TBL-050K-6	TBL-050K-6	PWRSURE 700 208/208V 50 kVA	66.0 x 29.0 x 35.5	970	$34,620
TBL-075K-6	TBL-075K-6	PWRSURE 700 208/208V 75 kVA	76.0 x 34.4 x 35.5	1100	$39,099
TBL-100K-6	TBL-100K-6	PWRSURE 700 208/208V 100 kVA	76.0 x 34.4 x 35.5	1660	$52,820
TBL-125K-6	TBL-125K-6	PWRSURE 700 208/208V 125 kVA	76.0 x 34.4 x 35.5	1980	$59,690
TBL-150K-6	TBL-150K-6	PWRSURE 700 208/208V 150 kVA	76.0 x 34.4 x 35.5	2200	$71,025
TBL-225K-6	TBL-225K-6	PWRSURE 700 208/208V 225 kVA	77.4 x 56.0 x 41.5	3300	$109,780
TBL-300K-6	TBL-300K-6	PWRSURE 700 208/208V 300 kVA	77.4 x 56.0 x 41.5	4000	$130,805

POWER-SURE 700 POWER CONDITIONERS: 240/208V

Catalog Number	Style Number	Description	Dimensions (H x W x D, inches)	Weight (lb)	List Price
TCL-010K-6	TCL-010K-6	PWRSURE 700 240/208V 10 kVA	30.2 x 22.2 x 29.0	440	$16,960
TCL-015K-6	TCL-015K-6	PWRSURE 700 240/208V 15 kVA	30.2 x 22.2 x 29.0	520	$18,240
TCL-030K-6	TCL-030K-6	PWRSURE 700 240/208V 30 kVA	44.2 x 22.2 x 29.0	720	$22,080
TCL-045K-6	TCL-045K-6	PWRSURE 700 240/208V 45 kVA	44.3 x 45.9 x 29.0	950	$33,410
TCL-050K-6	TCL-050K-6	PWRSURE 700 240/208V 50 kVA	66.0 x 29.0 x 35.5	970	$29,205
TCL-075K-6	TCL-075K-6	PWRSURE 700 240/208V 75 kVA	76.0 x 34.4 x 35.5	1100	$42,190
TCL-100K-6	TCL-100K-6	PWRSURE 700 240/208V 100 kVA	76.0 x 34.4 x 35.5	1660	$54,820

POWER-SURE 700 POWER CONDITIONERS: 480/208V

Catalog Number	Style Number	Description	Dimensions (H x W x D, inches)	Weight (lb)	List Price
TDL-010K-6	TDL-010K-6	PWRSURE 700 480/208V 10 kVA	30.2 x 22.2 x 29.0	440	$18,675
TDL-015K-6	TDL-015K-6	PWRSURE 700 480/208V 15 kVA	30.2 x 22.2 x 29.0	520	$20,660
TDL-025K-6	TDL-025K-6	PWRSURE 700 480/208V 25 kVA	44.2 x 22.2 x 29.0	700	$22,190
TDL-030K-6	TDL-030K-6	PWRSURE 700 480/208V 30 kVA	44.2 x 22.2 x 29.0	720	$23,150
TDL-045K-6	TDL-045K-6	PWRSURE 700 480/208V 45 kVA	44.3 x 45.9 x 29.0	950	$30,275
TDL-050K-6	TDL-050K-6	PWRSURE 700 480/208V 50 kVA	66.0 x 29.0 x 35.5	970	$30,455
TDL-075K-6	TDL-075K-6	PWRSURE 700 480/208V 75 kVA	76.0 x 34.4 x 35.5	1100	$45,400
TDL-100K-6	TDL-100K-6	PWRSURE 700 480/208V 100 kVA	76.0 x 34.4 x 35.5	1660	$49,260
TDL-125K-6	TDL-125K-6	PWRSURE 700 480/208V 125 kVA	76.0 x 34.4 x 35.5	1980	$48,990
TDL-150K-6	TDL-150K-6	PWRSURE 700 480/208V 150 kVA	76.0 x 34.4 x 35.5	2200	$54,685
TDL-225K-6	TDL-225K-6	PWRSURE 700 480/208V 225 kVA	77.4 x 56.0 x 41.5	3300	$95,835
TDL-300K-6	TDL-300K-6	PWRSURE 700 480/208V 300 kVA	77.4 x 56.0 x 41.5	4000	$101,480

POWER-SURE 700 *(continued)*

POWER-SURE 700 POWER CONDITIONERS: 480/480V

Catalog Number	Style Number	Description	Dimensions (H x W x D, inches)	Weight (lb)	List Price
TDN-010K-6	TDN-010K-6	PWRSURE 700 480/480V 10 kVA	30.2 x 22.2 x 29.0	440	$17,250
TDN-025K-6	TDN-025K-6	PWRSURE 700 480/480V 25 kVA	44.2 x 22.2 x 29.0	700	$24,315
TDN-030K-6	TDN-030K-6	PWRSURE 700 480/480V 30 kVA	44.2 x 22.2 x 29.0	720	$24,255
TDN-045K-6	TDN-045K-6	PWRSURE 700 480/480V 45 kVA	44.3 x 45.9 x 29.0	950	$31,175
TDN-075K-6	TDN-075K-6	PWRSURE 700 480/480V 75 kVA	76.0 x 34.4 x 35.5	1100	$36,660
TDN-100K-6	TDN-100K-6	PWRSURE 700 480/480V 100 kVA	76.0 x 34.4 x 35.5	1660	$48,236
TDN-125K-6	TDN-125K-6	PWRSURE 700 480/480V 125 kVA	76.0 x 34.4 x 35.5	1980	$49,575
TDN-150K-6	TDN-150K-6	PWRSURE 700 480/480V 150 kVA	76.0 x 34.4 x 35.5	2200	$59,880
TDN-225K-6	TDN-225K-6	PWRSURE 700 480/480V 225 kVA	77.4 x 56.0 x 41.5	3300	$87,890
TDN-300K-6	TDN-300K-6	PWRSURE 700 480/480V 300 kVA	77.4 x 56.0 x 41.5	4000	$107,890

POWER-SURE 700 POWER CONDITIONERS: 600/208V

Catalog Number	Style Number	Description	Dimensions** (H x W x D, inches)	Weight (lb)	List Price
TEL-010K-6	TEL-010K-6	PWRSURE 700 600/208V 10 kVA	30.2 x 22.2 x 29.0	440	$17,565
TEL-015K-6	TEL-015K-6	PWRSURE 700 600/208V 15 kVA	30.2 x 22.2 x 29.0	520	$18,870
TEL-025K-6	TEL-025K-6	PWRSURE 700 600/208V 25 kVA	44.2 x 22.2 x 29.0	700	$22,870
TEL-030K-6	TEL-030K-6	PWRSURE 700 600/208V 30 kVA	44.2 x 22.2 x 29.0	720	$23,070
TEL-045K-6	TEL-045K-6	PWRSURE 700 600/208V 45 kVA	44.3 x 45.9 x 29.0	950	$30,530
TEL-050K-6	TEL-050K-6	PWRSURE 700 600/208V 50 kVA	66.0 x 29.0 x 35.5	970	$31,065
TEL-075K-6	TEL-075K-6	PWRSURE 700 600/208V 75 kVA	76.0 x 34.4 x 35.5	1100	$47,475
TEL-100K-6	TEL-100K-6	PWRSURE 700 600/208V 100 kVA	76.0 x 34.4 x 35.5	1660	$56,425
TEL-125K-6	TEL-125K-6	PWRSURE 700 600/208V 125 kVA	76.0 x 34.4 x 35.5	1980	$51,335
TEL-150K-6	TEL-150K-6	PWRSURE 700 600/208V 150 kVA	76.0 x 34.4 x 35.5	2200	$69,560
TEL-225K-6	TEL-225K-6	PWRSURE 700 600/208V 225 kVA	77.4 x 56.0 x 41.5	3300	$95,835
TEL-300K-6	TEL-300K-6	PWRSURE 700 600/208V 300 kVA	77.4 x 56.0 x 41.5	4000	$107,755

POWER-SURE 700 POWER CONDITIONERS: 600/480V

Catalog Number	Style Number	Description	Dimensions (H x W x D, inches)	Weight (lb)	List Price
TEN-010K-6	TEN-010K-6	PWRSURE 700 600/480V 10 kVA	30.2 x 22.2 x 29.0	440	$17,250
TEN-015K-6	TEN-015K-6	PWRSURE 700 600/480V 15 kVA	30.2 x 22.2 x 29.0	520	$19,405
TEN-025K-6	TEN-025K-6	PWRSURE 700 600/480V 25 kVA	44.2 x 22.2 x 29.0	700	$21,385
TEN-030K-6	TEN-030K-6	PWRSURE 700 600/480V 30 kVA	44.2 x 22.2 x 29.0	720	$24,000
TEN-045K-6	TEN-045K-6	PWRSURE 700 600/480V 45 kVA	44.3 x 45.9 x 29.0	950	$27,425
TEN-075K-6	TEN-075K-6	PWRSURE 700 600/480V 75 kVA	76.0 x 34.4 x 35.5	1100	$43,675
TEN-100K-6	TEN-100K-6	PWRSURE 700 600/480V 100 kVA	76.0 x 34.4 x 35.5	1660	$51,285
TEN-125K-6	TEN-125K-6	PWRSURE 700 600/480V 125 kVA	76.0 x 34.4 x 35.5	1980	$53,040
TEN-150K-6	TEN-150K-6	PWRSURE 700 600/480V 150 kVA	76.0 x 34.4 x 35.5	2200	$62,945
TEN-225K-6	TEN-225K-6	PWRSURE 700 600/480V 225 kVA	77.4 x 56.0 x 41.5	3300	$90,880
TEN-300k-6	TEN-300k-6	PWRSURE 700 600/480V 300 kVA	77.4 x 56.0 x 41.5	4000	$103,190

** 10 & 15 KVA units utilize the next larger cabinet size when the meter option is included

POWER-SURE 700 OPTIONS

Suffix	Description	List Price Adder
B	Maintenance Bypass 10 kVA to 30 kVA	$1,625
B	Maintenance Bypass 45 kVA	$2,700
M1	Standard Meter option	$4,587
M2	Premium Meter option	$5,987
S	Integrated Surge Protection	$1,800
W	Extended Regulation range (+10% to -40%)	C/F

POWER-SURE 800

Power Conditioners (500VA to 25 kVA)

Superior power conditioning for industrial, commercial and medical equipment. Power-Sure 800 power conditioners provide high quality power with inherent surge protection, noise and bi-directional harmonic filtering, as well as superior isolation. Power-Sure 800 units range from office models to floor or wall/panel mounted industrial models and provide an excellent solution for any application with noisy or poor power quality.

- Superior isolation
- Tight voltage regulation
- High immunity to distortion
- Lightning and surge protection
- Protection against power interruptions
- Power factor correction
- Bi-directional harmonic filtering
- Meets ANSI standards for computers with inputs as low as 50% of nominal
- UL 1012, UL 544 and cUL Listed
- K-30 rated design

POWER-SURE 800 POWER CONDITIONERS: 60 Hz Models–Receptacle Style (Plug-and-play)

Catalog Number	Style Number	Description	Dimensions (H x W x D, inches)	Weight (lb)	List Price
T800R-00500	T800R-00500	PWRSURE 800 OFC/RCPT 500 VA	8.5 x 12.8 x 9.5	32	$923
T800R-00700	T800R-00700	PWRSURE 800 OFC/RCPT 700 VA	8.5 x 12.8 x 9.5	35	$1,259
T800R-00850	T800R-00850	PWRSURE 800 OFC/RCPT 800 VA	8.5 x 12.8 x 9.5	37	$1,298
T800R-01000	T800R-01000	PWRSURE 800 OFC/RCPT 1 kVA	8.5 x 12.8 x 17.5	46	$1,378
T800R-01600	T800R-01600	PWRSURE 800 OFC/RCPT 1.6 kVA	8.5 x 12.8 x 17.5	62	$1,728
T800R-02100	T800R-02100	PWRSURE 800 OFC/RCPT 2.1 kVA	8.5 x 12.8 x 17.5	65	$1,890
T800R-02500	T800R-02500	PWRSURE 800 OFC/RCPT 2.5 kVA	8.5 x 12.8 x 17.5	68	$1,982
T800R-03500	T800R-03500	PWRSURE 800 OFC/RCPT 3.5 kVA	8.5 x 12.8 x 17.5	72	$2,376
T800R-03501	T800R-03501	PWRSURE 800 OFC/RCPT 3.5 kVA	8.5 x 12.8 x 17.5	73	$2,512
T800R-05000	T800R-05000	PWRSURE 800 OFC/RCPT 5 kVA	15.0 x 23.8 x 22.5	176	Contact factory
T800R-07500	T800R-07500	PWRSURE 800 OFC/RCPT 7.5 kVA	15.0 x 23.8 x 22.5	210	Contact factory
T800R-10000	T800R-10000	PWRSURE 800 OFC/RCPT 10 kVA	15.0 x 23.8 x 22.5	256	Contact factory
T800R-15000	T800R-15000	PWRSURE 800 OFC/RCPT 15 kVA	15.0 x 23.8 x 22.5	314	Contact factory

POWER-SURE 800 POWER CONDITIONERS: 60 Hz Models—Hardwired Wall or Panel Mount

Catalog Number	Style Number	Description	Dimensions (H x W x D, inches)	Weight (lb)	List Price
T800P-00500	T800P-00500	PWRSURE 800 PNL/HW 500 VA	9.0 x 14.0 x 10.0	52	$1,107
T800P-00750	T800P-00750	PWRSURE 800 PNL/HW 750 VA	9.0 x 14.0 x 10.0	60	$1,433
T800P-01000	T800P-01000	PWRSURE 800 PNL/HW 1 kVA	9.0 x 14.0 x 10.0	82	$1,421
T800P-01500	T800P-01500	PWRSURE 800 PNL/HW 1.5 kVA	13.0 x 16.5 x 14.8	106	$2,048
T800P-02000	T800P-02000	PWRSURE 800 PNL/HW 2 kVA	13.0 x 16.5 x 14.8	125	$1,979
T800P-03000	T800P-03000	PWRSURE 800 PNL/HW 3 kVA	13.0 x 16.5 x 14.8	142	$3,070
T800P-05000	T800P-05000	PWRSURE 800 PNL/HW 5 kVA	27.0 x 22.5 x 28.5	437	$5,510
T800P-08000	T800P-08000	PWRSURE 800 PNL/HW 8 kVA	27.0 x 22.5 x 28.5	495	$6,785
T800P-10000	T800P-10000	PWRSURE 800 PNL/HW 10 kVA	27.0 x 22.5 x 28.5	537	$8,285

POWER-SURE 800 POWER CONDITIONERS: 60 Hz Models—Hardwired Floor Mount

Catalog Number	Style Number	Description	Dimensions (H x W x D, inches)	Weight (lb)	List Price
T800F-05000	T800F-05000	PWRSURE 800 FLR/HW 5 kVA	23.0 x 20.0 x 28.5	407	$5,615
T800F-08000	T800F-08000	PWRSURE 800 FLR/HW 8 kVA	23.0 x 20.0 x 28.5	465	$6,780
T800F-10000	T800F-10000	PWRSURE 800 FLR/HW 10 kVA	23.0 x 20.0 x 28.5	407	$7,610
T800F-15000	T800F-15000	PWRSURE 800 FLR/HW 15 kVA	35.0 x 25.0 x 39.5	830	$11,820
T800F-20000	T800F-20000	PWRSURE 800 FLR/HW 20 kVA	35.0 x 25.0 x 39.5	950	$14,305
T800F-25000	T800F-25000	PWRSURE 800 FLR/HW 25 kVA	35.0 x 25.0 x 39.5	1070	$16,335

POWER-SURE 800

CUSTOM OUTPUT RECEPTACLES

Suffix	NEMA	Volts	Amps	Output Panels used*
A	(1) 5-15R	120	15	1
B	(2) 5-15R	120	15	1
C	(1) 5-20R	120	20	1
D	(2) 5-20R	120	20	1
E	(1) 5-30R	120	30	1.5
F	(1) 6-15R	208/240	15	1
G	(2) 6-15R	208/240	15	1
H	(1) 6-20R	208/240	20	1
I	(2) 6-20R	208/240	20	1
J	(1) 6-30R	208/240	30	1.5
K	(1) 6-50R	208/240	50	1.5
L	(1) 14-20R	120/240	20	1
M	(1) 14-30R	120/240	30	1.5
N	(1) L5-15R	120	120	1
P	(2) L5-15R	120	15	1
R	(1) L5-20R	120	20	1
S	(1) L5-30R	120	30	1
T	(1) L6-15R	208/240	15	1
U	(2) L6-15R	208/240	15	1
V	(1) L6-20R	208/240	20	1
W	(1) L6-30R	208/240	30	1
X	(1) L14-30R	120/240	20	1
Y	(1) L14-20R	120/240	30	1

Example:
T800R-100002B2Y Consists of 2 (2)5-15R receptacles and 2 (1)L14-30R receptacles

Power Xpert Meter 4000/6000/8000

Power Quality Metering Products

You can't manage what you can't measure, and you certainly can't measure something you can't even see—without a power quality instrument that is. Invisible and fleeting power disturbances can be silent killers—the electronic equivalent of high blood pressure.

Eaton's Power Xpert 4000/6000/8000 meters represent a new genre of power quality instruments and world-class power monitoring that reduces day to day operating costs and helps avoid costly business interruptions. The meters combine state-of-the-art technology with next generation power diagnostics, data trending and performance benchmarking, along with a "Twist-n-Click" LCD: a new paradigm for simplicity and ease of use in the market place.



In addition the meters have an embedded Web server that enables users to surf to the meter over the Internet via a standard Web browser. The new platform offers advanced functionality like high speed impulsive transient waveform capture, 6 Mhz sampling rate (six samples every millionth of a second) with one millisecond time stamping, anti-aliasing, ITIC analysis and automatic trigger settings, open field upgradeable firmware, up to 8 GB memory and optional digital, relay I/O card.

Features and Benefits

- Free download of Power Xpert Meter Profiler to trend and predict energy usage
- Embedded Web Server -- see and analyze waveforms, trends, harmonics directly in your web browser or LCD meter graphic display
- Automatic power quality analysis and trigger setting with built-in ITIC performance curve: detect and capture sags, swells, transients and flicker
- Comprehensive power, energy and demand measurements for 138 standard data points logged
- At-a-glance view of power quality analysis with patented Power Quality Index gauge, statistically derived trending and red-yellow-green indicators for overall power health
- Energy usage patterns can be effortlessly analyzed with the month-to-month, week-to-week comparison chart. Raw data can be easily exported with the 'Save Table' option to other applications such as Excel for further analysis or graphing
- Industry-standard communication protocols, to support a multitude of configurations and third-party software: HTTP, FTP, Modbus RTU, Modbus TCP, SNMP, SMTP, NTP, COMTRADE , DNP 3.0 over Ethernet
- 4000 to 6000 meter firmware upgrade available
- High storage capacity
  - 4000 meter offers 2 GB
  - 6000 meter offers 4 GB
  - 8000 meter offers 8 GB
- ANSI C12.20 accuracy
- CE and Industry Canada certified

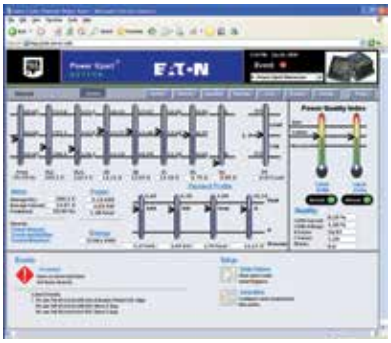

Applications

Identify power quality problems

- Identify harmonics, sags, swells and transients damaging or disrupting sensitive, mission critical IT equipment
- Boost IT equipments service life to the maximum
- Analyze sequence of events up to one millisecond time resolution
- Protect motors from damage
- Preserve the integrity of processes and batches
- Prevent blown capacitor bank fuses
- Protect transformers and conductors from overheating

Detect and record high speed transients

- Avoid equipment damage and disruption
- Identify equipment malfunction

Monitor circuit loading

- Avoid overloads and nuisance overload trips
- Maximize equipment utilization
- Manage emergency overloads

Manage energy utilization

- Reduce peak demand charges and power factor penalties
- Identify excessive energy consumption

Power Xpert Meter 4000/6000/8000 *(continued)*
Power Quality Metering Products

POWER XPERT METER 4000/6000/8000

Catalog Number	Style Number	Description	List Price
PXM 4000 METERS			
PXM4051A1AA	65D4061G001	PXM 4000 Meter, 2 GB, AC, no options	$5,835
PXM4051A1BA	65D4061G002	PXM 4000 Meter, 2 GB, AC, w/ Com. Exp. Card	$7,120
PXM4051A1AB	65D4061G005	PXM 4000 Meter, 2 GB, AC, w/ I/O Card	$6,540
PXM4051A1BB	65D4061G006	PXM 4000 Meter, 2 GB, AC, w/ Com. Exp. & I/O Cards	$7,820
PXM4251A1AA	65D4261G001	PXM 4000 Meter, 2 GB, AC, w/ VAUX	$6,775
PXM4251A1BA	65D4261G002	PXM 4000 Meter, 2 GB, AC, w/ VAUX & Com. Exp. Card	$8,060
PXM4251A1AB	65D4261G005	PXM 4000 Meter, 2 GB, AC, w/ VAUX & I/O Card	$7,475
PXM4251A1BB	65D4261G006	PXM 4000 Meter, 2 GB, AC, w/ VAUX, Com. Exp. & I/O Cards	$8,760
PXM 6000 METERS			
PXM6051A1AA	65D6061G001	PXM 6000 Meter, 4 GB, AC, no options	$8,175
PXM6051A1BA	65D6061G002	PXM 6000 Meter, 4 GB, AC, w/ Com. Exp. Card	$9,460
PXM6051A1AB	65D6061G005	PXM 6000 Meter, 4 GB, AC, w/ I/O Card	$8,875
PXM6051A1BB	65D6061G006	PXM 6000 Meter, 4 GB, AC, w/ Com. Exp. & I/O Cards	$10,160
PXM6251A1AA	65D6261G001	PXM 6000 Meter, 4 GB, AC, w/ VAUX	$9,110
PXM6251A1BA	65D6261G002	PXM 6000 Meter, 4 GB, AC, w/ VAUX & Com. Exp. Card	$10,395
PXM6251A1AB	65D6261G005	PXM 6000 Meter, 4 GB, AC, w/ VAUX & I/O Card	$9,810
PXM6251A1BB	65D6261G006	PXM 6000 Meter, 4 GB, AC, w/ VAUX, Com. Exp. & I/O Cards	$11,095
PXM 8000 METERS			
PXM8051A1AA	65D8061G001	PXM 8000 Meter, 8 GB, AC, no options	$10,515
PXM8051A1BA	65D8061G002	PXM 8000 Meter, 8 GB, AC, w/ Com. Exp. Card	$11,795
PXM8051A1AB	65D8061G005	PXM 8000 Meter, 8 GB, AC, w/ I/O Card	$11,210
PXM8051A1BB	65D8061G006	PXM 8000 Meter, 8 GB, AC, w/ Com. Exp. & I/O Cards	$12,495
PXM8251A1AA	65D8261G001	PXM 8000 Meter, 8 GB, AC, w/ VAUX	$11,445
PXM8251A1BA	65D8261G002	PXM 8000 Meter, 8 GB, AC, w/ VAUX & Com. Exp. Card	$12,735
PXM8251A1AB	65D8261G005	PXM 8000 Meter, 8 GB, AC, w/ VAUX & I/O Card	$12,150
PXM8251A1BB	65D8261G006	PXM 8000 Meter, 8 GB, AC, w/ VAUX, Com. Exp. & I/O Cards	$13,430

POWER XPERT METER 4000/6000/8000 ACCESSORIES

Catalog Number	Style Number	Description	List Price
PX-PMBA	66B2133G01	PXM Bracket Assembly for back-to-back meter to display mounti	$234
PXMIO-B	66D2101G11	I/O card: 8 Digital Input, 2 Solid State Output, 3 Relay Out	$701
PXMCE-B	66D2102G11	Com Expansion Card: Ethernet 100FX, 10/100T, RS-485, RS-232	$1,286
PXD-MMG	66D2117G01	PXM Meter Graphic Display Module	$1,869
PX-PMBB	66D2148G01	Panel mnt bracket retrofit assembly for PXM LCD to an IQA cu	$175
PX-PMBC	66D2150G01	Panel mnt bracket assembly for reduced PXM LCD Display rear	$175
PXM-4KUPG	65D1001G01	POWER XPERT METER 4000 TO 6000 LICENSE UPGRADE KEY	$2,746

Power Xpert Meter 4000/6000/8000 Catalog Numbering System

PXM 8 0 5 1 A 1 B B

Model Series

4 = 4000 (Standard Power Quality), 2 GB
6 = 6000 (Enhanced Power Quality), 4 GB
8 = 8000 (Premium PQ w/Transient Capture), 8 GB

Voltage Input Configuration

0 = Standard (V_1, V_2, V_3, V_4)
2 = Standard plus auxiliary (V_6, V_7, V_8)

Power Supply Configuration

1 = Standard 100-240 Vac or 110-250 Vac Power Supply

Card Slot 3 Configuration

A = No Card Option
B = I/O Option Card (8 Digital Inputs, 2 Solid State Outputs, 3 Relay Outputs)

Card Slot 2 Configuration

A = No Card Option
B = Communication Expansion Card w/ 10/100 Base-T, 100F, RS-485, RS-232 Ports

Card Slot 1 Configuration

1 = Standard Communications Module with RS-485

Example 1: **PXM8251A1BB** (PXM 8000 Meter, w/ VAUX, Std pwr, Com. Exp. and I/O Cards)

Example 2: **PXM6251A1BA** (PXM 6000 Meter, w/ VAUX, Std pwr, Com. Exp. Card)

POWER XPERT METER 2000

Compact Power Quality Metering Products



The meters combine state-of-the-art technology with waveform viewing and recording, data trending and performance benchmarking. The embedded Web server enables users to surf to the meter over the Internet via a standard Web browser. This platform offers adaptability such as field-upgradeable firmware and optional digital inputs/outputs and analog outputs.

Applications

Identify power quality problems to help:

- Protect motors from damage
- Preserve the integrity of processes and batches
- Prevent blown capacitor bank fuses
- Protect transformers and conductors from overheating

POWER XPERT METER 2000

Catalog Number	Description	List Price
PXM 2250 Meters		
PXM2250MA51105	PXM2250 Meter/Display 50Hz 1A 90-265V AC/DC	$2,194
PXM2250MA51405	PXM2250 Meter/Display 50Hz 1A 24-48V DC	$2,194
PXM2250MA55105	PXM2250 Meter/Display 50Hz 5A 90-265V AC/DC	$2,194
PXM2250MA55405	PXM2250 Meter/Display 50Hz 5A 24-48V DC	$2,194
PXM2250MA61105	PXM2250 Meter/Display 60Hz 1A 90-265V AC/DC	$2,194
PXM2250MA61405	PXM2250 Meter/Display 60Hz 1A 24-48V DC	$2,194
PXM2250MA65105	PXM2250 Meter/Display 60Hz 5A 90-265V AC/DC	$2,194
PXM2250MA65115	PXM2250 Meter/Display 60Hz 5A 90-265V AC/DC w/2DO&2DI	$2,682
PXM2250MA65125	PXM2250 Meter/Display 60Hz 5A 90-265V AC/DC w/4KYZ&4DI	$3,226
PXM2250MA65135	PXM2250 Meter/Display 60Hz 5A 90-265V AC/DC w/4AO 0-1	$3,226
PXM2250MA65145	PXM2250 Meter/Display 60Hz 5A 90-265V AC/DC w/4AO 4-20	$2,795
PXM2250MA65405	PXM2250 Meter/Display 60Hz 5A 24-48V DC	$2,194
PXM2250MA65415	PXM2250 Meter/Display 60Hz 5A 24-48V DC w/2DO&2DI	$2,682
PXM2250MA65425	PXM2250 Meter/Display 60Hz 5A 24-48V DC w/4KYZ&4DI	$3,226
PXM2250MA65435	PXM2250 Meter/Display 60Hz 5A 24-48V DC w/4AO 0-1	$3,226
PXM2250MA65445	PXM2250 Meter/Display 60Hz 5A 24-48V DC w/4AO 4-20	$2,795
PXM2250TA51105	PXM2250 Transducer Only 50Hz 1A 90-265V AC/DC	$2,005
PXM2250TA51405	PXM2250 Transducer Only 50Hz 1A 24-48V DC	$2,005
PXM2250TA55105	PXM2250 Transducer Only 50Hz 5A 90-265V AC/DC	$2,005
PXM2250TA55405	PXM2250 Transducer Only 50Hz 5A 24-48V DC	$2,005
PXM2250TA61105	PXM2250 Transducer Only 60Hz 1A 90-265V AC/DC	$2,005
PXM2250TA61405	PXM2250 Transducer Only 60Hz 1A 24-48V DC	$2,005
PXM2250TA65105	PXM2250 Transducer Only 60Hz 5A 90-265V AC/DC	$2,005
PXM2250TA65115	PXM2250 Transducer Only 60Hz 5A 90-265V AC/DC w/2DO&2DI	$2,495
PXM2250TA65125	PXM2250 Transducer Only 60Hz 5A 90-265V AC/DC w/4KYZ&4DI	$3,038
PXM2250TA65135	PXM2250 Transducer Only 60Hz 5A 90-265V AC/DC w/4AO 0-1	$3,038
PXM2250TA65145	PXM2250 Transducer Only 60Hz 5A 90-265V AC/DC w/4AO 4-20	$2,608
PXM2250TA65405	PXM2250 Transducer Only 60Hz 5A 24-48V DC	$2,005
PXM2250TA65415	PXM2250 Transducer Only 60Hz 5A 24-48V DC w/2DO&2DI	$2,495
PXM2250TA65425	PXM2250 Transducer Only 60Hz 5A 24-48V DC w/4KYZ&4DI	$3,038
PXM2250TA65435	PXM2250 Transducer Only 60Hz 5A 24-48V DC w/4AO 0-1	$3,038
PXM2250TA65445	PXM2250 Transducer Only 60Hz 5A 24-48V DC w/4AO 4-20	$2,608
PXM 2260 Meters		
PXM2260MA51105	PXM2260 Meter/Display 50Hz 1A 90-265V AC/DC	$2,592
PXM2260MA51405	PXM2260 Meter/Display 50Hz 1A 24-48V DC	$2,592
PXM2260MA55105	PXM2260 Meter/Display 50Hz 5A 90-265V AC/DC	$2,592
PXM2260MA55405	PXM2260 Meter/Display 50Hz 5A 24-48V DC	$2,592
PXM2260MA61105	PXM2260 Meter/Display 60Hz 1A 90-265V AC/DC	$2,592
PXM2260MA61405	PXM2260 Meter/Display 60Hz 1A 24-48V DC	$2,592
PXM2260MA65105	PXM2260 Meter/Display 60Hz 5A 90-265V AC/DC	$2,592

POWER XPERT METER 2000 *(continued)*
Power Quality Metering Products

POWER XPERT METER 2000 *(continued)*

Catalog Number	Description	List Price
PXM 2260 Meters (continued)		
PXM2260MA65115	PXM2260 Meter/Display 60Hz 5A 90-265V AC/DC w/2DO&2DI	$3,081
PXM2260MA65125	PXM2260 Meter/Display 60Hz 5A 90-265V AC/DC w/4KYZ&4DI	$3,625
PXM2260MA65135	PXM2260 Meter/Display 60Hz 5A 90-265V AC/DC w/4AO 0-1	$3,625
PXM2260MA65145	PXM2260 Meter/Display 60Hz 5A 90-265V AC/DC w/4AO 4-20	$3,194
PXM2260MA65405	PXM2260 Meter/Display 60Hz 5A 24-48V DC	$2,592
PXM2260MA65415	PXM2260 Meter/Display 60Hz 5A 24-48V DC w/2DO&2DI	$3,081
PXM2260MA65425	PXM2260 Meter/Display 60Hz 5A 24-48V DC w/4KYZ&4DI	$3,625
PXM2260MA65435	PXM2260 Meter/Display 60Hz 5A 24-48V DC w/4AO 0-1	$3,625
PXM2260MA65445	PXM2260 Meter/Display 60Hz 5A 24-48V DC w/4AO 4-20	$3,194
PXM2260TA51105	PXM2260 Transducer Only 50Hz 1A 90-265V AC/DC	$2,404
PXM2260TA51405	PXM2260 Transducer Only 50Hz 1A 24-48V DC	$2,404
PXM2260TA55105	PXM2260 Transducer Only 50Hz 5A 90-265V AC/DC	$2,404
PXM2260TA55405	PXM2260 Transducer Only 50Hz 5A 24-48V DC	$2,404
PXM2260TA61105	PXM2260 Transducer Only 60Hz 1A 90-265V AC/DC	$2,404
PXM2260TA61405	PXM2260 Transducer Only 60Hz 1A 24-48V DC	$2,404
PXM2260TA65105	PXM2260 Transducer Only 60Hz 5A 90-265V AC/DC	$2,404
PXM2260TA65115	PXM2260 Transducer Only 60Hz 5A 90-265V AC/DC w/2DO&2DI	$2,893
PXM2260TA65125	PXM2260 Transducer Only 60Hz 5A 90-265V AC/DC w/4KYZ&4DI	$3,436
PXM2260TA65135	PXM2260 Transducer Only 60Hz 5A 90-265V AC/DC w/4AO 0-1	$3,436
PXM2260TA65145	PXM2260 Transducer Only 60Hz 5A 90-265V AC/DC w/4AO 4-20	$3,006
PXM2260TA65405	PXM2260 Transducer Only 60Hz 5A 24-48V DC	$2,404
PXM2260TA65415	PXM2260 Transducer Only 60Hz 5A 24-48V DC w/2DO&2DI	$2,893
PXM2260TA65425	PXM2260 Transducer Only 60Hz 5A 24-48V DC w/4KYZ&4DI	$3,436
PXM2260TA65435	PXM2260 Transducer Only 60Hz 5A 24-48V DC w/4AO 0-1	$3,436
PXM2260TA65445	PXM2260 Transducer Only 60Hz 5A 24-48V DC w/4AO 4-20	$3,006
PXM 2270 Meters		
PXM2270MA51105	PXM2270 Meter/Display 50Hz 1A 90-265V AC/DC	$3,434
PXM2270MA51405	PXM2270 Meter/Display 50Hz 1A 24-48V DC	$3,434
PXM2270MA55105	PXM2270 Meter/Display 50Hz 5A 90-265V AC/DC	$3,434
PXM2270MA55405	PXM2270 Meter/Display 50Hz 5A 24-48V DC	$3,434
PXM2270MA61105	PXM2270 Meter/Display 60Hz 1A 90-265V AC/DC	$3,434
PXM2270MA61405	PXM2270 Meter/Display 60Hz 1A 24-48V DC	$3,434
PXM2270MA65105	PXM2270 Meter/Display 60Hz 5A 90-265V AC/DC	$3,434
PXM2270MA65115	PXM2270 Meter/Display 60Hz 5A 90-265V AC/DC w/2DO&2DI	$3,923
PXM2270MA65125	PXM2270 Meter/Display 60Hz 5A 90-265V AC/DC w/4KYZ&4DI	$4,467
PXM2270MA65135	PXM2270 Meter/Display 60Hz 5A 90-265V AC/DC w/4AO 0-1	$4,467
PXM2270MA65145	PXM2270 Meter/Display 60Hz 5A 90-265V AC/DC w/4AO 4-20	$4,036
PXM2270MA65405	PXM2270 Meter/Display 60Hz 5A 24-48V DC	$3,434
PXM2270MA65415	PXM2270 Meter/Display 60Hz 5A 24-48V DC w/2DO&2DI	$3,923
PXM2270MA65425	PXM2270 Meter/Display 60Hz 5A 24-48V DC w/4KYZ&4DI	$4,467
PXM2270MA65435	PXM2270 Meter/Display 60Hz 5A 24-48V DC w/4AO 0-1	$4,467
PXM2270MA65445	PXM2270 Meter/Display 60Hz 5A 24-48V DC w/4AO 4-20	$4,036
PXM2270TA51105	PXM2270 Transducer Only 50Hz 1A 90-265V AC/DC	$3,348
PXM2270TA51405	PXM2270 Transducer Only 50Hz 1A 24-48V DC	$3,348
PXM2270TA55105	PXM2270 Transducer Only 50Hz 5A 90-265V AC/DC	$3,348
PXM2270TA55405	PXM2270 Transducer Only 50Hz 5A 24-48V DC	$3,348
PXM2270TA61105	PXM2270 Transducer Only 60Hz 1A 90-265V AC/DC	$3,348
PXM2270TA61405	PXM2270 Transducer Only 60Hz 1A 24-48V DC	$3,348
PXM2270TA65105	PXM2270 Transducer Only 60Hz 5A 90-265V AC/DC	$3,348
PXM2270TA65115	PXM2270 Transducer Only 60Hz 5A 90-265V AC/DC w/2DO&2DI	$3,836
PXM2270TA65125	PXM2270 Transducer Only 60Hz 5A 90-265V AC/DC w/4KYZ&4DI	$4,380

POWER XPERT METER 2000 *(continued)*
Power Quality Metering Products

POWER XPERT METER 2000 *(continued)*

Catalog Number	Description	List Price
PXM 2270 Meters (continued)		
PXM2270TA65135	PXM2270 Transducer Only 60Hz 5A 90-265V AC/DC w/4AO 0-1	$4,380
PXM2270TA65145	PXM2270 Transducer Only 60Hz 5A 90-265V AC/DC w/4AO 4-20	$3,951
PXM2270TA65405	PXM2270 Transducer Only 60Hz 5A 24-48V DC	$3,348
PXM2270TA65415	PXM2270 Transducer Only 60Hz 5A 24-48V DC w/2DO&2DI	$3,836
PXM2270TA65425	PXM2270 Transducer Only 60Hz 5A 24-48V DC w/4KYZ&4DI	$4,380
PXM2270TA65435	PXM2270 Transducer Only 60Hz 5A 24-48V DC w/4AO 0-1	$4,380
PXM2270TA65445	PXM2270 Transducer Only 60Hz 5A 24-48V DC w/4AO 4-20	$3,951
PXM 2280 Meters		
PXM2280MA51105	PXM2280 Meter/Display 50Hz 1A 90-265V AC/DC	$4,289
PXM2280MA51405	PXM2280 Meter/Display 50Hz 1A 24-48V DC	$4,289
PXM2280MA55105	PXM2280 Meter/Display 50Hz 5A 90-265V AC/DC	$4,289
PXM2280MA55405	PXM2280 Meter/Display 50Hz 5A 24-48V DC	$4,289
PXM2280MA61105	PXM2280 Meter/Display 60Hz 1A 90-265V AC/DC	$4,289
PXM2280MA61405	PXM2280 Meter/Display 60Hz 1A 24-48V DC	$4,289
PXM2280MA65105	PXM2280 Meter/Display 60Hz 5A 90-265V AC/DC	$4,289
PXM2280MA65115	PXM2280 Meter/Display 60Hz 5A 90-265V AC/DC w/2DO&2DI	$4,785
PXM2280MA65125	PXM2280 Meter/Display 60Hz 5A 90-265V AC/DC w/4KYZ&4DI	$5,370
PXM2280MA65135	PXM2280 Meter/Display 60Hz 5A 90-265V AC/DC w/4AO 0-1	$5,370
PXM2280MA65145	PXM2280 Meter/Display 60Hz 5A 90-265V AC/DC w/4AO 4-20	$4,900
PXM2280MA65405	PXM2280 Meter/Display 60Hz 5A 24-48V DC	$4,289
PXM2280MA65415	PXM2280 Meter/Display 60Hz 5A 24-48V DC w/2DO&2DI	$4,785
PXM2280MA65425	PXM2280 Meter/Display 60Hz 5A 24-48V DC w/4KYZ&4DI	$5,370
PXM2280MA65435	PXM2280 Meter/Display 60Hz 5A 24-48V DC w/4AO 0-1	$5,370
PXM2280MA65445	PXM2280 Meter/Display 60Hz 5A 24-48V DC w/4AO 4-20	$4,900
PXM2280TA51105	PXM2280 Transducer Only 50Hz 1A 90-265V AC/DC	$4,039
PXM2280TA51405	PXM2280 Transducer Only 50Hz 1A 24-48V DC	$4,039
PXM2280TA55105	PXM2280 Transducer Only 50Hz 5A 90-265V AC/DC	$4,039
PXM2280TA55405	PXM2280 Transducer Only 50Hz 5A 24-48V DC	$4,039
PXM2280TA61105	PXM2280 Transducer Only 60Hz 1A 90-265V AC/DC	$4,039
PXM2280TA61405	PXM2280 Transducer Only 60Hz 1A 24-48V DC	$4,039
PXM2280TA65105	PXM2280 Transducer Only 60Hz 5A 90-265V AC/DC	$4,039
PXM2280TA65115	PXM2280 Transducer Only 60Hz 5A 90-265V AC/DC w/2DO&2DI	$4,533
PXM2280TA65125	PXM2280 Transducer Only 60Hz 5A 90-265V AC/DC w/4KYZ&4DI	$5,105
PXM2280TA65135	PXM2280 Transducer Only 60Hz 5A 90-265V AC/DC w/4AO 0-1	$5,105
PXM2280TA65145	PXM2280 Transducer Only 60Hz 5A 90-265V AC/DC w/4AO 4-20	$4,648
PXM2280TA65405	PXM2280 Transducer Only 60Hz 5A 24-48V DC	$4,039
PXM2280TA65415	PXM2280 Transducer Only 60Hz 5A 24-48V DC w/2DO&2DI	$4,533
PXM2280TA65425	PXM2280 Transducer Only 60Hz 5A 24-48V DC w/4KYZ&4DI	$5,105
PXM2280TA65435	PXM2280 Transducer Only 60Hz 5A 24-48V DC w/4AO 0-1	$5,105
PXM2280TA65445	PXM2280 Transducer Only 60Hz 5A 24-48V DC w/4AO 4-20	$4,648
PXM 2290 Meters		
PXM2290MA51105	PXM2290 Meter/Display 50Hz 1A 90-265V AC/DC	$6,275
PXM2290MA51405	PXM2290 Meter/Display 50Hz 1A 24-48V DC	$6,275
PXM2290MA55105	PXM2290 Meter/Display 50Hz 5A 90-265V AC/DC	$6,275
PXM2290MA55405	PXM2290 Meter/Display 50Hz 5A 24-48V DC	$6,275
PXM2290MA61105	PXM2290 Meter/Display 60Hz 1A 90-265V AC/DC	$6,275
PXM2290MA61405	PXM2290 Meter/Display 60Hz 1A 24-48V DC	$6,275
PXM2290MA65105	PXM2290 Meter/Display 60Hz 5A 90-265V AC/DC	$6,275
PXM2290MA65115	PXM2290 Meter/Display 60Hz 5A 90-265V AC/DC w/2DO&2DI	$6,790
PXM2290MA65125	PXM2290 Meter/Display 60Hz 5A 90-265V AC/DC w/4KYZ&4DI	$7,440
PXM2290MA65135	PXM2290 Meter/Display 60Hz 5A 90-265V AC/DC w/4AO 0-1	$7,440

POWER XPERT METER 2000 *(continued)*
Power Quality Metering Products

POWER XPERT METER 2000 *(continued)*

Catalog Number	Description	List Price
PXM 2290 Meters (continued)		
PXM2290MA65145	PXM2290 Meter/Display 60Hz 5A 90-265V AC/DC w/4AO 4-20	$6,910
PXM2290MA65405	PXM2290 Meter/Display 60Hz 5A 24-48V DC	$6,275
PXM2290MA65415	PXM2290 Meter/Display 60Hz 5A 24-48V DC w/2DO&2DI	$6,790
PXM2290MA65425	PXM2290 Meter/Display 60Hz 5A 24-48V DC w/4KYZ&4DI	$7,440
PXM2290MA65435	PXM2290 Meter/Display 60Hz 5A 24-48V DC w/4AO 0-1	$7,440
PXM2290MA65445	PXM2290 Meter/Display 60Hz 5A 24-48V DC w/4AO 4-20	$6,910
PXM2290TA51105	PXM2290 Transducer Only 50Hz 1A 90-265V AC/DC	$6,025
PXM2290TA51405	PXM2290 Transducer Only 50Hz 1A 24-48V DC	$6,025
PXM2290TA55105	PXM2290 Transducer Only 50Hz 5A 90-265V AC/DC	$6,025
PXM2290TA55405	PXM2290 Transducer Only 50Hz 5A 24-48V DC	$6,025
PXM2290TA61105	PXM2290 Transducer Only 60Hz 1A 90-265V AC/DC	$6,025
PXM2290TA61405	PXM2290 Transducer Only 60Hz 1A 24-48V DC	$6,025
PXM2290TA65105	PXM2290 Transducer Only 60Hz 5A 90-265V AC/DC	$6,025
PXM2290TA65115	PXM2290 Transducer Only 60Hz 5A 90-265V AC/DC w/2DO&2DI	$6,535
PXM2290TA65125	PXM2290 Transducer Only 60Hz 5A 90-265V AC/DC w/4KYZ&4DI	$7,185
PXM2290TA65135	PXM2290 Transducer Only 60Hz 5A 90-265V AC/DC w/4AO 0-1	$7,185
PXM2290TA65145	PXM2290 Transducer Only 60Hz 5A 90-265V AC/DC w/4AO 4-20	$6,655
PXM2290TA65405	PXM2290 Transducer Only 60Hz 5A 24-48V DC	$6,025
PXM2290TA65415	PXM2290 Transducer Only 60Hz 5A 24-48V DC w/2DO&2DI	$6,535
PXM2290TA65425	PXM2290 Transducer Only 60Hz 5A 24-48V DC w/4KYZ&4DI	$7,185
PXM2290TA65435	PXM2290 Transducer Only 60Hz 5A 24-48V DC w/4AO 0-1	$7,185
PXM2290TA65445	PXM2290 Transducer Only 60Hz 5A 24-48V DC w/4AO 4-20	$6,655

*Prices subject to change.

POWER XPERT METER 2000 ACCESSORIES

Catalog Number	Description	List Price
IQ250/260-IO1	PXM 2000 I/O Card-2 Relay Outputs/2 Status Inputs	$530
IQ250/260-IO2	PXM 2000 I/O Card-4 KYZ Pulses/4 Status Inputs	$1,119
IQ250/260-IO3	PXM 2000 I/O Card-4 Analog Outputs - 0–1 mA	$1,119
IQ250/260-IO4	PXM 2000 I/O Card-4 Analog Outputs - 4–20 mA	$653
IQ250-PMAK	Panel Mounting Adapter Kit-PXM2000 To IQ A/DP/DATA	$94
PXM2000-GCK	PXM 2000 Gateway Card Kit to Upgrade an IQ 250/260 to a PXM 2000	$877

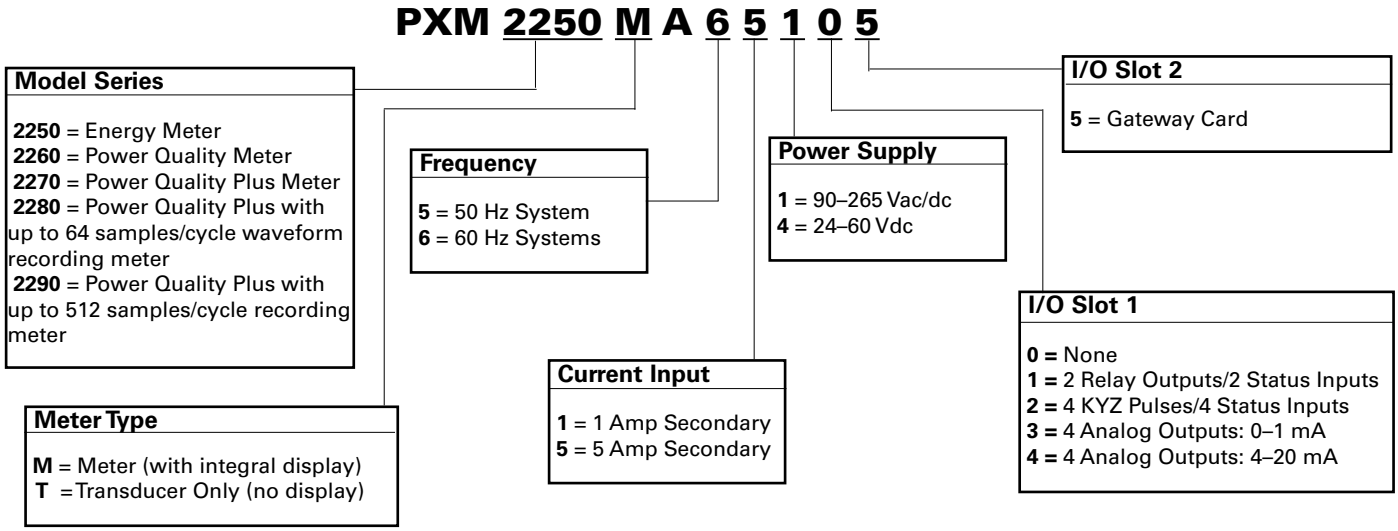

Example 1: **PXM2270MA65145** (PXM 2270 Meter/Display 60 Hz, 5 A, 90 – 265 Vac/dc W/4AO)
Example 2: **PXM2250MA65105** (PXM 2250 Meter/Display 60 Hz, 5 A, 90 – 265 Vac/dc)

IQ 250/260 SERIES
Metering Products

The IQ 250 and IQ 260 electronic meters provide capabilities you wouldn't normally expect in an affordable, compact meter—such as fast sampling rate and accurate metering for a full range of power attributes. The meter can be configured either from the easy-to-read display or remotely (accessible via a Power Xpert Gateway) via included configuration software. In addition, built-in slots allow for upgrades to input/output option cards.

Applications

Identify power quality problems to help:

- Comprehensive metering
- High-end accuracy
- Self-test capability to validate accuracy
- Large, easy-to-read display
- Local or remote configuration
- Industry-standard communication protocols (Modbus)
- Mix-and-match input/output options
- Integration with Eaton's Power Xpert Architecture
- Field-upgradeable



IQ 250/260 SERIES

Catalog Number	Description	List Price
IQ 250 Meters		
IQ250MA51100	IQ250 Meter/Display 50Hz 1A 90-265V AC/DC	$1,462
IQ250MA51400	IQ250 Meter/Display 50Hz 1A 24-48V DC	$1,462
IQ250MA55100	IQ250 Meter/Display 50Hz 5A 90-265V AC/DC	$1,462
IQ250MA55400	IQ250 Meter/Display 50Hz 5A 24-48V DC	$1,462
IQ250MA61100	IQ250 Meter/Display 60Hz 1A 90-265V AC/DC	$1,462
IQ250MA61400	IQ250 Meter/Display 60Hz 1A 24-48V DC	$1,462
IQ250MA65100	IQ250 Meter/Display 60Hz 5A 90-265V AC/DC	$1,462
IQ250MA65110	IQ250 Meter/Display 60Hz 5A 90-265V AC/DC w/2DO&2DI	$1,991
IQ250MA65114	IQ250 Meter/Display 60Hz 5A 90-265V AC/DC w/2DO&2DI&4AO	$2,641
IQ250MA65120	IQ250 Meter/Display 60Hz 5A 90-265V AC/DC w/4KYZ&4DI	$2,579
IQ250MA65140	IQ250 Meter/Display 60Hz 5A 90-265V AC/DC w/4AO	$2,113
IQ250MA65400	IQ250 Meter/Display 60Hz 5A 24-48V DC	$1,462
IQ250MA65410	IQ250 Meter/Display 60Hz 5A 24-48V DC w/2DO&2DI	$1,991
IQ250MA65414	IQ250 Meter/Display 60Hz 5A 24-48V DC w/2DO&2DI&4AO	$2,641
IQ250MA65420	IQ250 Meter/Display 60Hz 5A 24-48V DC w/4KYZ&4DI	$2,579
IQ250MA65440	IQ250 Meter/Display 60Hz 5A 24-48V DC w/4AO	$2,113
IQ250ML51100	IQ250 Meter/Display Log 50Hz 1A 90-265V AC/DC	$1,918
IQ250ML51400	IQ250 Meter/Display Log 50Hz 1A 24-48V DC	$1,918
IQ250ML55100	IQ250 Meter/Display Log 50Hz 5A 90-265V AC/DC	$1,918
IQ250ML55400	IQ250 Meter/Display Log 50Hz 5A 24-48V DC	$1,918
IQ250ML61100	IQ250 Meter/Display Log 60Hz 1A 90-265V AC/DC	$1,918
IQ250ML61400	IQ250 Meter/Display Log 60Hz 1A 24-48V DC	$1,918
IQ250ML65100	IQ250 Meter/Display Log 60Hz 5A 90-265V AC/DC	$1,918
IQ250ML65110	IQ250 Meter/Display Log 60Hz 5A 90-265V AC/DC w/2DO&2DI	$2,445
IQ250ML65114	IQ250 Meter/Display Log 60Hz 5A 90-265V AC/DC w/2DO&2DI&4AO	$3,094
IQ250ML65120	IQ250 Meter/Display Log 60Hz 5A 90-265V AC/DC w/4KYZ&4DI	$3,060
IQ250ML65130	IQ250 Meter/Display Log 60Hz 5A 90-265V AC/DC w/4AO 0-1mA	$3,060
IQ250ML65140	IQ250 Meter/Display Log 60Hz 5A 90-265V AC/DC w/4AO	$2,568
IQ250ML65400	IQ250 Meter/Display Log 60Hz 5A 24-48V DC	$1,918
IQ250ML65410	IQ250 Meter/Display Log 60Hz 5A 24-48V DC w/2DO&2DI	$2,445
IQ250ML65414	IQ250 Meter/Display Log 60Hz 5A 24-48V DC w/2DO&2DI&4AO	$3,094
IQ250ML65420	IQ250 Meter/Display Log 60Hz 5A 24-48V DC w/4KYZ&4DI	$3,060
IQ250ML65440	IQ250 Meter/Display Log 60Hz 5A 24-48V DC w/4AO	$2,568

IQ 250/260 SERIES *(continued)*
Metering Products

IQ 250/260 SERIES *(continued)*

Configuration Number	Catalog Number	Description	List Price
IQ 250 Meters (continued)			
IQ250TA51100	IQ250 Transducer Only 50Hz 1A 90-265V AC/DC		$1,259
IQ250TA51400	IQ250 Transducer Only 50Hz 1A 24-48V DC		$1,259
IQ250TA55100	IQ250 Transducer Only 50Hz 5A 90-265V AC/DC		$1,259
IQ250TA55400	IQ250 Transducer Only 50Hz 5A 24-48V DC		$1,259
IQ250TA61100	IQ250 Transducer Only 60Hz 1A 90-265V AC/DC		$1,259
IQ250TA61400	IQ250 Transducer Only 60Hz 1A 24-48V DC		$1,259
IQ250TA65100	IQ250 Transducer Only 60Hz 5A 90-265V AC/DC		$1,259
IQ250TA65110	IQ250 Transducer Only 60Hz 5A 90-265V AC/DC w/2DO&2DI		$1,787
IQ250TA65114	IQ250 Transducer Only 60Hz 5A 90-265V AC/DC w/2DO&2DI&4AO		$2,439
IQ250TA65120	IQ250 Transducer Only 60Hz 5A 90-265V AC/DC w/4KYZ&4DI		$2,375
IQ250TA65140	IQ250 Transducer Only 60Hz 5A 90-265V AC/DC w/4AO		$1,909
IQ250TA65400	IQ250 Transducer Only 60Hz 5A 24-48V DC		$1,259
IQ250TA65410	IQ250 Transducer Only 60Hz 5A 24-48V DC w/2DO&2DI		$1,787
IQ250TA65414	IQ250 Transducer Only 60Hz 5A 24-48V DC w/2DO&2DI&4AO		$2,439
IQ250TA65420	IQ250 Transducer Only 60Hz 5A 24-48V DC w/4KYZ&4DI		$2,375
IQ250TA65440	IQ250 Transducer Only 60Hz 5A 24-48V DC w/4AO		$1,909
IQ250TL51100	IQ250 Transducer Log 50Hz 1A 90-265V AC/DC		$1,730
IQ250TL51400	IQ250 Transducer Log 50Hz 1A 24-48V DC		$1,730
IQ250TL55100	IQ250 Transducer Log 50Hz 5A 90-265V AC/DC		$1,730
IQ250TL55400	IQ250 Transducer Log 50Hz 5A 24-48V DC		$1,730
IQ250TL61100	IQ250 Transducer Log 60Hz 1A 90-265V AC/DC		$1,730
IQ250TL61400	IQ250 Transducer Log 60Hz 1A 24-48V DC		$1,730
IQ250TL65100	IQ250 Transducer Log 60Hz 5A 90-265V AC/DC		$1,730
IQ250TL65110	IQ250 Transducer Log 60Hz 5A 90-265V AC/DC w/2DO&2DI		$2,250
IQ250TL65114	IQ250 Transducer Log 60Hz 5A 90-265V AC/DC w/2DO&2DI&4AO		$2,897
IQ250TL65120	IQ250 Transducer Log 60Hz 5A 90-265V AC/DC w/4KYZ&4DI		$2,865
IQ250TL65130	IQ250 Transducer Log 60Hz 5A 90-265V AC/DC w/4AO 0-1mA		$2,865
IQ250TL65140	IQ250 Transducer Log 60Hz 5A 90-265V AC/DC w/4AO		$2,371
IQ250TL65400	IQ250 Transducer Log 60Hz 5A 24-48V DC		$1,730
IQ250TL65410	IQ250 Transducer Log 60Hz 5A 24-48V DC w/2DO&2DI		$2,250
IQ250TL65414	IQ250 Transducer Log 60Hz 5A 24-48V DC w/2DO&2DI&4AO		$2,897
IQ250TL65420	IQ250 Transducer Log 60Hz 5A 24-48V DC w/4KYZ&4DI		$2,865
IQ250TL65440	IQ250 Transducer Log 60Hz 5A 24-48V DC w/4AO		$2,371
IQ 260 Meters			
IQ260MA51400	IQ260 Meter/Display 50Hz 1A 24-48V DC		$1,894
IQ260MA55100	IQ260 Meter/Display 50Hz 5A 90-265V AC/DC		$1,894
IQ260MA55400	IQ260 Meter/Display 50Hz 5A 24-48V DC		$1,894
IQ260MA61100	IQ260 Meter/Display 60Hz 1A 90-265V AC/DC		$1,894
IQ260MA61400	IQ260 Meter/Display 60Hz 1A 24-48V DC		$1,894
IQ260MA65100	IQ260 Meter/Display 60Hz 5A 90-265V AC/DC		$1,894
IQ260MA65110	IQ260 Meter/Display 60Hz 5A 90-265V AC/DC w/2DO&2DI		$2,422
IQ260MA65114	IQ260 Meter/Display 60Hz 5A 90-265V AC/DC w/2DO&2DI&4AO		$3,073
IQ260MA65120	IQ260 Meter/Display 60Hz 5A 90-265V AC/DC w/4KYZ&4DI		$3,011
IQ260MA65140	IQ260 Meter/Display 60Hz 5A 90-265V AC/DC w/4AO		$2,545
IQ260MA65400	IQ260 Meter/Display 60Hz 5A 24-48V DC		$1,894
IQ260MA65410	IQ260 Meter/Display 60Hz 5A 24-48V DC w/2DO&2DI		$2,422
IQ260MA65414	IQ260 Meter/Display 60Hz 5A 24-48V DC w/2DO&2DI&4AO		$3,073
IQ260MA65420	IQ260 Meter/Display 60Hz 5A 24-48V DC w/4KYZ&4DI		$3,011
IQ260MA65440	IQ260 Meter/Display 60Hz 5A 24-48V DC w/4AO		$2,545
IQ260ML51100	IQ260 Meter/Display Log 50Hz 1A 90-265V AC/DC		$2,355
IQ260ML51400	IQ260 Meter/Display Log 50Hz 1A 24-48V DC		$2,355

IQ 250/260 SERIES *(continued)*
Metering Products

IQ 250/260 SERIES *(continued)*

Catalog Number	Description	List Price
IQ 260 Meters (continued)		
IQ260ML55100	IQ260 Meter/Display Log 50Hz 5A 90-265V AC/DC	$2,355
IQ260ML55400	IQ260 Meter/Display Log 50Hz 5A 24-48V DC	$2,355
IQ260ML61100	IQ260 Meter/Display Log 60Hz 1A 90-265V AC/DC	$2,355
IQ260ML61400	IQ260 Meter/Display Log 60Hz 1A 24-48V DC	$2,355
IQ260ML65100	IQ260 Meter/Display Log 60Hz 5A 90-265V AC/DC	$2,355
IQ260ML65110	IQ260 Meter/Display Log 60Hz 5A 90-265V AC/DC w/2DO&2DI	$2,880
IQ260ML65114	IQ260 Meter/Display Log 60Hz 5A 90-265V AC/DC w/2DO&2DI&4AO	$3,527
IQ260ML65120	IQ260 Meter/Display Log 60Hz 5A 90-265V AC/DC w/4KYZ&4DI	$3,491
IQ260ML65130	IQ260 Meter/Display Log 60Hz 5A 90-265V AC/DC w/4AO 0-1mA	$3,491
IQ260ML65140	IQ260 Meter/Display Log 60Hz 5A 90-265V AC/DC w/4AO	$3,002
IQ260ML65400	IQ260 Meter/Display Log 60Hz 5A 24-48V DC	$2,355
IQ260ML65410	IQ260 Meter/Display Log 60Hz 5A 24-48V DC w/2DO&2DI	$2,880
IQ260ML65414	IQ260 Meter/Display Log 60Hz 5A 24-48V DC w/2DO&2DI&4AO	$3,527
IQ260ML65420	IQ260 Meter/Display Log 60Hz 5A 24-48V DC w/4KYZ&4DI	$3,491
IQ260ML65440	IQ260 Meter/Display Log 60Hz 5A 24-48V DC w/4AO	$3,002
IQ260TA51100	IQ260 Transducer Only 50Hz 1A 90-265V AC/DC	$1,690
IQ260TA51400	IQ260 Transducer Only 50Hz 1A 24-48V DC	$1,690
IQ260TA55100	IQ260 Transducer Only 50Hz 5A 90-265V AC/DC	$1,690
IQ260TA55400	IQ260 Transducer Only 50Hz 5A 24-48V DC	$1,690
IQ260TA61100	IQ260 Transducer Only 60Hz 1A 90-265V AC/DC	$1,690
IQ260TA61400	IQ260 Transducer Only 60Hz 1A 24-48V DC	$1,690
IQ260TA65100	IQ260 Transducer Only 60Hz 5A 90-265V AC/DC	$1,690
IQ260TA65110	IQ260 Transducer Only 60Hz 5A 90-265V AC/DC w/2DO&2DI	$2,218
IQ260TA65114	IQ260 Transducer Only 60Hz 5A 90-265V AC/DC w/2DO&2DI&4AO	$2,870
IQ260TA65120	IQ260 Transducer Only 60Hz 5A 90-265V AC/DC w/4KYZ&4DI	$2,806
IQ260TA65140	IQ260 Transducer Only 60Hz 5A 90-265V AC/DC w/4AO	$2,342
IQ260TA65400	IQ260 Transducer Only 60Hz 5A 24-48V DC	$1,690
IQ260TA65410	IQ260 Transducer Only 60Hz 5A 24-48V DC w/2DO&2DI	$2,218
IQ260TA65414	IQ260 Transducer Only 60Hz 5A 24-48V DC w/2DO&2DI&4AO	$2,870
IQ260TA65420	IQ260 Transducer Only 60Hz 5A 24-48V DC w/4KYZ&4DI	$2,806
IQ260TA65440	IQ260 Transducer Only 60Hz 5A 24-48V DC w/4AO	$2,342
IQ260TL51100	IQ260 Transducer Log 50Hz 1A 90-265V AC/DC	$2,161
IQ260TL51400	IQ260 Transducer Log 50Hz 1A 24-48V DC	$2,161
IQ260TL55100	IQ260 Transducer Log 50Hz 5A 90-265V AC/DC	$2,161
IQ260TL55400	IQ260 Transducer Log 50Hz 5A 24-48V DC	$2,161
IQ260TL61100	IQ260 Transducer Log 60Hz 1A 90-265V AC/DC	$2,161
IQ260TL61400	IQ260 Transducer Log 60Hz 1A 24-48V DC	$2,161
IQ260TL65100	IQ260 Transducer Log 60Hz 5A 90-265V AC/DC	$2,161
IQ260TL65110	IQ260 Transducer Log 60Hz 5A 90-265V AC/DC w/2DO&2DI	$2,683
IQ260TL65114	IQ260 Transducer Log 60Hz 5A 90-265V AC/DC w/2DO&2DI&4AO	$3,330
IQ260TL65120	IQ260 Transducer Log 60Hz 5A 90-265V AC/DC w/4KYZ&4DI	$3,294
IQ260TL65130	IQ260 Transducer Log 60Hz 5A 90-265V AC/DC w/4AO 0-1mA	$3,294
IQ260TL65140	IQ260 Transducer Log 60Hz 5A 90-265V AC/DC w/4AO	$2,807
IQ260TL65400	IQ260 Transducer Log 60Hz 5A 24-48V DC	$2,161
IQ260TL65410	IQ260 Transducer Log 60Hz 5A 24-48V DC w/2DO&2DI	$2,683
IQ260TL65414	IQ260 Transducer Log 60Hz 5A 24-48V DC w/2DO&2DI&4AO	$3,330
IQ260TL65420	IQ260 Transducer Log 60Hz 5A 24-48V DC w/4KYZ&4DI	$3,294
IQ260TL65440	IQ260 Transducer Log 60Hz 5A 24-48V DC w/4AO	$2,807

*Prices subject to change.

IQ 250/260 SERIES *(continued)*
Metering Products

IQ 250/260 ACCESSORIES (I/O Cards Offered for Upgrade)

Catalog Number	Description	List Price
IQ250/260-IO1	PXM 2000 I/O Card-2 Relay Outputs/2 Status Inputs	$530
IQ250/260-IO2	PXM 2000 I/O Card-4 KYZ Pulses/4 Status Inputs	$1,119
IQ250/260-IO3	PXM 2000 I/O Card-4 Analog Outputs - 0–1 mA	$1,119
IQ250/260-IO4	PXM 2000 I/O Card-4 Analog Outputs - 4–20 mA	$653
IQ250-PMAK	Panel Mounting Adapter Kit-PXM2000 To IQ A/DP/DATA	$94
PXM2000-GCK	PXM 2000 Gateway Card Kit to Upgrade an IQ 250/260 to a PXM 2000	$877

IQ 250/260 Catalog Numbering System

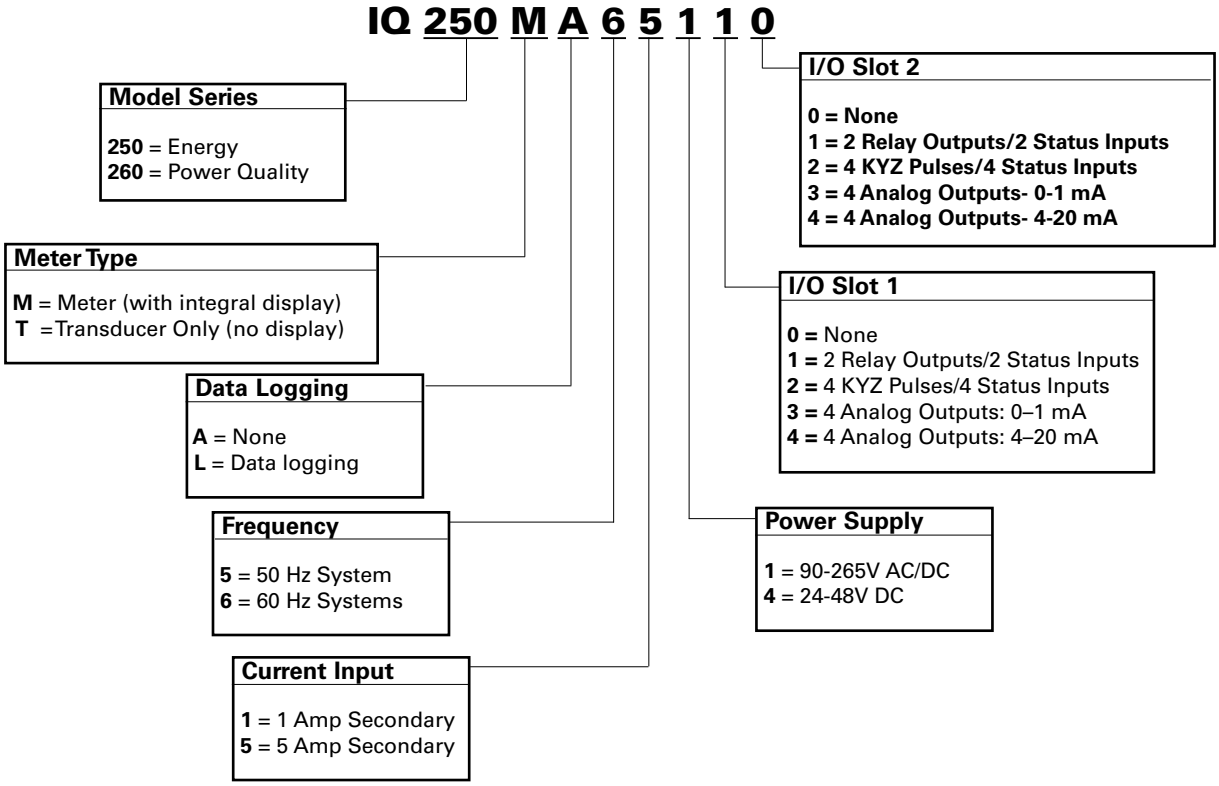

Example 1: **IQ250MA65140** (IQ 250 Meter/Display 60 Hz, 5 A, 90 – 265 Vac/dc W/4AO)
Example 2: **IQ260MA65100** (IQ 260 Meter/Display 60 Hz, 5 A, 90 – 265 Vac/dc)

IQ 130/140/150 SERIES
Metering Products

Providing the first line of defense against costly power problems, Eaton's IQ 100 electronic power meters can perform the work of an entire wall of legacy metering equipment utilizing today's technology. Eaton's IQ 100 meters use 24-bit AD converters that sample at more than 400 samples per cycle and meet ANSI C12.20 standards for accuracy of 0.5 percent. With such high-performance measurement capability, these meters can be confidently used for primary revenue metering and submetering applications.



Applications

- Utility and commercial metering
- Substations, industrial facilities, power generation sites and campuses
- Submetering
- Load studies and voltage recording
- Analog meter replacement

IQ 130/140/150 SERIES

Catalog Number	Description	List Price
IQ 130 Meters		
IQ130MA5110	IQ130 Meter/Display 50Hz 1A 90-265V AC/DC	$493
IQ130MA5111	IQ130 Meter/Display 50Hz 1A 90-265V AC/DC w/Modbus/KYZ Out	$654
IQ130MA5112	IQ130 Meter/Display 50HZ 1A 90-265V AC/DC w/Ethernet/KYZ	$1,074
IQ130MA5140	IQ130 Meter/Display 50Hz 1A 24-48V DC	$493
IQ130MA5510	IQ130 Meter/Display 50Hz 5A 90-265V AC/DC	$493
IQ130MA5511	IQ130 Meter/Display 50Hz 5A 90-265V AC/DC w/Modbus/KYZ Out	$654
IQ130MA5512	IQ130 Meter/Display 50HZ 5A 90-265V AC/DC w/Ethernet/KYZ	$1,074
IQ130MA5540	IQ130 Meter/Display 50Hz 5A 24-48V DC	$493
IQ130MA6110	IQ130 Meter/Display 60Hz 1A 90-265V AC/DC	$493
IQ130MA6111	IQ130 Meter/Display 60Hz 1A 90-265V AC/DC w/Modbus/KYZ Out	$654
IQ130MA6112	IQ130 Meter/Display 60HZ 1A 90-265V AC/DC w/Ethernet/KYZ	$1,074
IQ130MA6140	IQ130 Meter/Display 60Hz 1A 24-48V DC	$493
IQ130MA6510	IQ130 Meter/Display 60Hz 5A 90-265V AC/DC	$493
IQ130MA6511	IQ130 Meter/Display 60Hz 5A 90-265V AC/DC w/Modbus/KYZ Out	$654
IQ130MA6512	IQ130 Meter/Display 60HZ 5A 90-265V AC/DC w/Ethernet/KYZ	$1,074
IQ130MA6540	IQ130 Meter/Display 60Hz 5A 24-48V DC	$493
IQ130MA6541	IQ130 Meter/Display 60Hz 5A 24-48V DC w/Modbus/KYZ Out	$654
IQ130MA6542	IQ130 Meter/Display 60HZ 5A 24-48V DC w/Ethernet/KYZ	$1,074
IQ130TA5111	IQ130 Transducer Only 50Hz 1A 90-265V AC/DC w/Modbus/KYZ Out	$493
IQ130TA5112	IQ130 Transducer Only 50HZ 1A 90-265V AC/DC w/Ethernet/KYZ	$972
IQ130TA5141	IQ130 Transducer Only 50Hz 1A 24-48V DC w/Modbus/KYZ Out	$493
IQ130TA5142	IQ130 Transducer Only 50HZ 1A 24-48V DC w/Ethernet/KYZ	$972
IQ130TA5511	IQ130 Transducer Only 50Hz 5A 90-265V AC/DC w/Modbus/KYZ Out	$493
IQ130TA5512	IQ130 Transducer Only 50HZ 5A 90-265V AC/DC w/Ethernet/KYZ	$972
IQ130TA5541	IQ130 Transducer Only 50Hz 5A 24-48V DC w/Modbus/KYZ Out	$493
IQ130TA5542	IQ130 Transducer Only 50HZ 5A 24-48V DC w/Ethernet/KYZ	$972
IQ130TA6111	IQ130 Transducer Only 60Hz 1A 90-265V AC/DC w/Modbus/KYZ Out	$493
IQ130TA6112	IQ130 Transducer Only 60HZ 1A 90-265V AC/DC w/Ethernet/KYZ	$972
IQ130TA6141	IQ130 Transducer Only 60Hz 1A 24-48V DC w/Modbus/KYZ Out	$493
IQ130TA6142	IQ130 Transducer Only 60HZ 1A 24-48V DC w/Ethernet/KYZ	$972
IQ130TA6511	IQ130 Transducer Only 60Hz 5A 90-265V AC/DC w/Modbus/KYZ Out	$493
IQ130TA6512	IQ130 Transducer Only 60HZ 5A 90-265V AC/DC w/Ethernet/KYZ	$972
IQ130TA6541	IQ130 Transducer Only 60Hz 5A 24-48V DC w/Modbus/KYZ Out	$493
IQ130TA6542	IQ130 Transducer Only 60HZ 5A 24-48V DC w/Ethernet/KYZ	$972
IQ 140 Meters		
IQ140MA5110	IQ140 Meter/Display 50Hz 1A 90-265V AC/DC	$638
IQ140MA5111	IQ140 Meter/Display 50Hz 1A 90-265V AC/DC w/Modbus/KYZ Out	$798
IQ140MA5112	IQ140 Meter/Display 50HZ 1A 90-265V AC/DC w/Ethernet/KYZ	$1,218

IQ 130/140/150 SERIES *(continued)*
Metering Products

IQ 130/140/150 SERIES *(continued)*

Catalog Number	Description	List Price
IQ 140 Meters (continued)		
IQ140MA5140	IQ140 Meter/Display 50Hz 1A 24-48V DC	$638
IQ140MA5510	IQ140 Meter/Display 50Hz 5A 90-265V AC/DC	$638
IQ140MA5511	IQ140 Meter/Display 50Hz 5A 90-265V AC/DC w/Modbus/KYZ Out	$798
IQ140MA5512	IQ140 Meter/Display 50HZ 5A 90-265V AC/DC w/Ethernet/KYZ	$1,218
IQ140MA5540	IQ140 Meter/Display 50Hz 5A 24-48V DC	$638
IQ140MA6110	IQ140 Meter/Display 60Hz 1A 90-265V AC/DC	$638
IQ140MA6111	IQ140 Meter/Display 60Hz 1A 90-265V AC/DC w/Modbus/KYZ Out	$798
IQ140MA6112	IQ140 Meter/Display 60HZ 1A 90-265V AC/DC w/Ethernet/KYZ	$1,218
IQ140MA6140	IQ140 Meter/Display 60Hz 1A 24-48V DC	$638
IQ140MA6510	IQ140 Meter/Display 60Hz 5A 90-265V AC/DC	$638
IQ140MA6511	IQ140 Meter/Display 60Hz 5A 90-265V AC/DC w/Modbus/KYZ Out	$798
IQ140MA6512	IQ140 Meter/Display 60HZ 5A 90-265V AC/DC w/Ethernet/KYZ	$1,218
IQ140MA6540	IQ140 Meter/Display 60Hz 5A 24-48V DC	$638
IQ140MA6541	IQ140 Meter/Display 60Hz 5A 24-48V DC w/Modbus/KYZ Out	$798
IQ140MA6542	IQ140 Meter/Display 60HZ 5A 24-48V DC w/Ethernet/KYZ	$1,218
IQ140TA5111	IQ140 Transducer Only 50Hz 1A 90-265V AC/DC w/Modbus/KYZ Out	$638
IQ140TA5112	IQ140 Transducer Only 50HZ 1A 90-265V AC/DC w/Ethernet/KYZ	$1,117
IQ140TA5141	IQ140 Transducer Only 50Hz 1A 24-48V DC w/Modbus/KYZ Out	$638
IQ140TA5142	IQ140 Transducer Only 50HZ 1A 24-48V DC w/Ethernet/KYZ	$1,117
IQ140TA5511	IQ140 Transducer Only 50Hz 5A 90-265V AC/DC w/Modbus/KYZ Out	$638
IQ140TA5512	IQ140 Transducer Only 50HZ 5A 90-265V AC/DC w/Ethernet/KYZ	$1,117
IQ140TA5541	IQ140 Transducer Only 50Hz 5A 24-48V DC w/Modbus/KYZ Out	$638
IQ140TA5542	IQ140 Transducer Only 50HZ 5A 24-48V DC w/Ethernet/KYZ	$1,117
IQ140TA6111	IQ140 Transducer Only 60Hz 1A 90-265V AC/DC w/Modbus/KYZ Out	$638
IQ140TA6112	IQ140 Transducer Only 60HZ 1A 90-265V AC/DC w/Ethernet/KYZ	$1,117
IQ140TA6141	IQ140 Transducer Only 60Hz 1A 24-48V DC w/Modbus/KYZ Out	$638
IQ140TA6142	IQ140 Transducer Only 60HZ 1A 24-48V DC w/Ethernet/KYZ	$1,117
IQ140TA6511	IQ140 Transducer Only 60Hz 5A 90-265V AC/DC w/Modbus/KYZ Out	$638
IQ140TA6512	IQ140 Transducer Only 60HZ 5A 90-265V AC/DC w/Ethernet/KYZ	$1,117
IQ140TA6541	IQ140 Transducer Only 60Hz 5A 24-48V DC w/Modbus/KYZ Out	$638
IQ140TA6542	IQ140 Transducer Only 60HZ 5A 24-48V DC w/Ethernet/KYZ	$1,117
IQ 150 Meters		
IQ150MA5110	IQ150 Meter/Display 50Hz 1A 90-265V AC/DC	$675
IQ150MA5111	IQ150 Meter/Display 50Hz 1A 90-265V AC/DC w/Modbus/KYZ Out	$835
IQ150MA5112	IQ150 Meter/Display 50HZ 1A 90-265V AC/DC w/Ethernet/KYZ	$1,255
IQ150MA5140	IQ150 Meter/Display 50Hz 1A 24-48V DC	$675
IQ150MA5510	IQ150 Meter/Display 50Hz 5A 90-265V AC/DC	$675
IQ150MA5511	IQ150 Meter/Display 50Hz 5A 90-265V AC/DC w/Modbus/KYZ Out	$835
IQ150MA5512	IQ150 Meter/Display 50HZ 5A 90-265V AC/DC w/Ethernet/KYZ	$1,255
IQ150MA5540	IQ150 Meter/Display 50Hz 5A 24-48V DC	$675
IQ150MA6110	IQ150 Meter/Display 60Hz 1A 90-265V AC/DC	$675
IQ150MA6111	IQ150 Meter/Display 60Hz 1A 90-265V AC/DC w/Modbus/KYZ Out	$835
IQ150MA6112	IQ150 Meter/Display 60HZ 1A 90-265V AC/DC w/Ethernet/KYZ	$1,255
IQ150MA6140	IQ150 Meter/Display 60Hz 1A 24-48V DC	$675
IQ150MA6510	IQ150 Meter/Display 60Hz 5A 90-265V AC/DC	$675
IQ150MA6511	IQ150 Meter/Display 60Hz 5A 90-265V AC/DC w/Modbus/KYZ Out	$835
IQ150MA6512	IQ150 Meter/Display 60HZ 5A 90-265V AC/DC w/Ethernet/KYZ	$1,255
IQ150MA6540	IQ150 Meter/Display 60Hz 5A 24-48V DC	$675
IQ150MA6541	IQ150 Meter/Display 60Hz 5A 24-48V DC w/Modbus/KYZ Out	$835
IQ150MA6542	IQ150 Meter/Display 60HZ 5A 24-48V DC w/Ethernet/KYZ	$1,255

IQ 130/140/150 SERIES *(continued)*
Metering Products

IQ 130/140/150 SERIES *(continued)*

Catalog Number	Description	List Price
IQ 150 Meters (continued)		
IQ150TA5111	IQ150 Transducer Only 50Hz 1A 90-265V AC/DC w/Modbus/KYZ Out	$675
IQ150TA5112	IQ150 Transducer Only 50HZ 1A 90-265V AC/DC w/Ethernet/KYZ	$1,153
IQ150TA5141	IQ150 Transducer Only 50Hz 1A 24-48V DC w/Modbus/KYZ Out	$675
IQ150TA5142	IQ150 Transducer Only 50HZ 1A 24-48V DC w/Ethernet/KYZ	$1,153
IQ150TA5511	IQ150 Transducer Only 50Hz 5A 90-265V AC/DC w/Modbus/KYZ Out	$675
IQ150TA5512	IQ150 Transducer Only 50HZ 5A 90-265V AC/DC w/Ethernet/KYZ	$1,153
IQ150TA5541	IQ150 Transducer Only 50Hz 5A 24-48V DC w/Modbus/KYZ Out	$675
IQ150TA5542	IQ150 Transducer Only 50HZ 5A 24-48V DC w/Ethernet/KYZ	$1,153
IQ150TA6111	IQ150 Transducer Only 60Hz 1A 90-265V AC/DC w/Modbus/KYZ Out	$675
IQ150TA6112	IQ150 Transducer Only 60HZ 1A 90-265V AC/DC w/Ethernet/KYZ	$1,153
IQ150TA6141	IQ150 Transducer Only 60Hz 1A 24-48V DC w/Modbus/KYZ Out	$675
IQ150TA6142	IQ150 Transducer Only 60HZ 1A 24-48V DC w/Ethernet/KYZ	$1,153
IQ150TA6511	IQ150 Transducer Only 60Hz 5A 90-265V AC/DC w/Modbus/KYZ Out	$675
IQ150TA6512	IQ150 Transducer Only 60HZ 5A 90-265V AC/DC w/Ethernet/KYZ	$1,153
IQ150TA6541	IQ150 Transducer Only 60Hz 5A 24-48V DC w/Modbus/KYZ Out	$675
IQ150TA6542	IQ150 Transducer Only 60HZ 5A 24-48V DC w/Ethernet/KYZ	$1,153

Accessories

Catalog Number	Description	List Price
IQ250-PMAK	Panel Mounting Adapter Kit-IQ 130/140/150 To IQ A/DP/DATA	$94

IQ 100 Catalog Numbering System

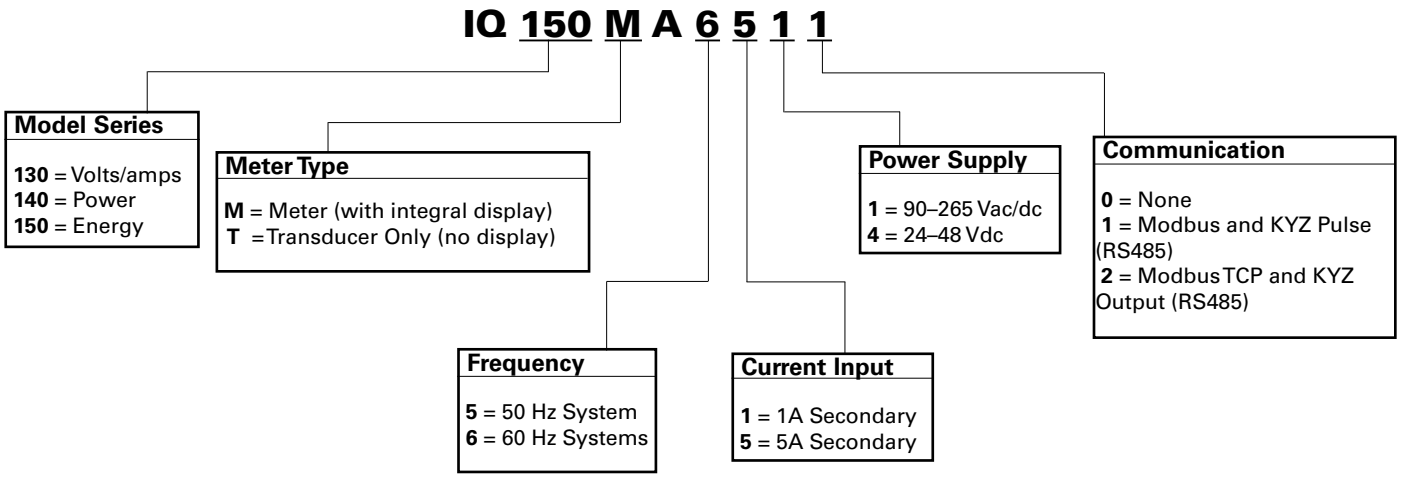

PXMP SERIES
Metering Products

Features



- Scalable submetering
- Designed to facilitate commissioning and troubleshooting with visual indicators that simplify installation, wiring and maintenance
- Integrated energy allocation application
- Cost-effective way to meter energy in assemblies or distribution equipment with a high density of metering points
- A single device can handle up to 20 three-phase circuits
- Web-enabled access to energy information
- Integrated monitoring that enables facility managers to track tenants' energy usage
- Monitor gas, water, steam and utilities to manage your entire energy footprint
- Remote monitoring means that frequent equipment checks are a thing of the past

PXMP SERIES

Catalog Number	Description	List Price
Meter Bases and Meter Modules with ABCN Voltage Inputs		
PXMP-MB	PXMP meter base—three-phase with ABCN voltage inputs	$2,662
PXMP-MM100MA	PXMP meter module with six 100 mA inputs for use with PXMP current sensors	$621
PXMP-MM10MA	PXMP meter module with six 10 mA inputs for use with IQMESII current sensors	$621
PXMP-MM333MV	PXMP meter module with six 333 mV inputs for use with 333 mV current sensors	$621
Meter Bases and Meter Modules with ABN Voltage Inputs		
PXMP-MB-AB	PXMP meter base—single-phase, three-wire with ABN voltage inputs	$2,662
PXMP-MM100MA-AB	PXMP meter module with six 100 mA inputs for use with PXMP current sensors	$621
PXMP-MM10MA-AB	PXMP meter module with six 10 mA inputs for use with IQMESII current sensors	$621
PXMP-MM333MV -AB	PXMP meter module with six 333 mV inputs for use with 333 mV current sensors	$621
IO Modules		
PXMP-PIM	PXMP meter pulse input module with eight inputs	$535
PXMP-DOM	PXMP meter digital output module with eight outputs	$576
Communication Module		
PXMP-EPM	PXMP meter energy portal module	$1,750
PXMP-EPM-M	PXMP meter energy portal module with modem	$2,050
Current Sensor Kits		
PXMP-CS125-3	KIT, PXMP CS125 sensor, quantity of 3	$92
PXMP-CS250-3	KIT, PXMP CS250 sensor, quantity of 3	$103
PXMP-CS400-3	KIT, PXMP CS400 sensor, quantity of 3	$149
Current Sensor Cable Kits		
PXMP-SC4-3	KIT, PXMP sensor cable, 4 ft (1.2m), quantity of 3	$65
PXMP-SC6-3	KIT, PXMP sensor cable, 6 ft (1.8m), quantity of 3	$71
PXMP-SC8-3	KIT, PXMP sensor cable, 8 ft (2.4m), quantity of 3	$77
PXMP-SC12-3	KIT, PXMP sensor cable, 12 ft (3.7m), quantity of 3	$90
Current Sensor Extension Cable Kits		
PXMP-SCE8-3	KIT, PXMP sensor extension cable, 8 ft (2.4m), quantity of 3	$83
PXMP-SCE16-3	KIT, PXMP sensor extension cable, 16 ft (4.9m), quantity of 3	$113
Interface Modules		
PXMP-IM333MV-3	KIT, PXMP current sensor interface module for 333 mV, quantity of 3	$200
Display		
PXMP-DISP-6	PXMP meter display—6-inch color (with cable)	$875

Enclosed Meters
Power Quality Metering Products



Designed for the IQ35M, IQ150, IQ250/260, and Power Xpert Meter 2000, Eaton's Single and Multi Unit Enclosed Meter offers mounting and installation flexibility, especially in retrofit applications where no metering compartment or mounting space is available in the existing electrical distribution equipment or where installation time is a premium. Factory designed and wired, Eaton's Enclosed Meter delivers savings in labor and installation costs since input current and voltage wiring as well as I/O wiring is pre-wired to terminal blocks inside the Enclosure. To ensure safety, Eaton's Enclosed Meter includes a primary breaker for line voltage that can be turned off during meter maintenance.

Applications

Stand-alone, enclosed meters are ideal for new metering applications where no metering existed previously, retrofit installations or where ease of installation is required. All necessary components are included.

ENCLOSED METERS — SINGLE UNIT

Catalog Number	Description	List Price
w/IQ35M Series Meters		
IQ35MA12-3A	IQ35M w/Modbus w/NEMA 3R Enclosure	$3,009
IQ35MA15-3A	IQ35M w/BACNET w/NEMA 3R Enclosure	$3,591
w/IQ100 Meter Series		
IQ150MA6511-2A	IQ150 w/Modbus/KYZ Out w/NEMA 12 Enclosure	$1,768
IQ150MA6511-2B	IQ150 w/Modbus/KYZ Out w/NEMA 12 Enclosure w/CPT	$1,926
IQ150MA6511-3A	IQ150 w/Modbus/KYZ Out w/NEMA 3R Enclosure	$1,851
IQ150MA6511-3B	IQ150 w/Modbus/KYZ Out w/NEMA 3R Enclosure w/CPT	$2,010
IQ150MA6511-4A	IQ150 w/Modbus/KYZ Out w/NEMA 4X Enclosure	$1,948
IQ150MA6511-4B	IQ150 w/Modbus/KYZ Out w/NEMA 4X Enclosure w/CPT	$2,106
IQ150MA6512-2A	IQ150 w/Ethernet/KYZ Out w/NEMA 12 Enclosure	$2,188
IQ150MA6512-2B	IQ150 w/Ethernet/KYZ Out w/NEMA 12 Enclosure w/CPT	$2,346
IQ150MA6512-3A	IQ150 w/Ethernet/KYZ Out w/NEMA 3R Enclosure	$2,271
IQ150MA6512-3B	IQ150 w/Ethernet/KYZ Out w/NEMA 3R Enclosure w/CPT	$2,430
IQ150MA6512-4A	IQ150 w/Ethernet/KYZ Out w/NEMA 4X Enclosure	$2,368
IQ150MA6512-4B	IQ150 w/Ethernet/KYZ Out w/NEMA 4X Enclosure w/CPT	$2,526
w/IQ150S/250S Series Meters		
IQ150SA6512-2A	IQ150S w/Ethernet/WIFI w/NEMA 12 Enclosure	$3,607
IQ250SA6512-2A	IQ250S w/Ethernet/WIFI w/NEMA 12 Enclosure	$4,227
w/IQ250/260 Meter Series		
IQ250MA65100-2A	IQ250 w/NEMA 12 Enclosure	$2,380
IQ250MA65100-2B	IQ250 w/NEMA 12 Enclosure w/CPT	$2,539
IQ250MA65100-3A	IQ250 w/NEMA 3R Enclosure	$2,465
IQ250MA65100-3B	IQ250 w/NEMA 3R Enclosure w/CPT	$2,623
IQ250MA65100-4A	IQ250 w/NEMA 4X Enclosure	$2,561
IQ250MA65100-4B	IQ250 w/NEMA 4X Enclosure w/CPT	$2,720
IQ250MA65110-2A	IQ250 w/2DO&2DI w/NEMA 12 Enclosure	$3,129
IQ250MA65110-2B	IQ250 w/2DO&2DI w/NEMA 12 Enclosure w/CPT	$3,288
IQ250MA65110-3A	IQ250 w/2DO&2DI w/NEMA 3R Enclosure	$3,213
IQ250MA65110-3B	IQ250 w/2DO&2DI w/NEMA 3R Enclosure w/CPT	$3,372
IQ250MA65110-4A	IQ250 w/2DO&2DI w/NEMA 4X Enclosure	$3,310
IQ250MA65110-4B	IQ250 w/2DO&2DI w/NEMA 4X Enclosure w/CPT	$3,469
IQ250MA65114-2A	IQ250 w/2DO&2DI&4AO w/NEMA 12 Enclosure	$3,812
IQ250MA65114-2B	IQ250 w/2DO&2DI&4AO w/NEMA 12 Enclosure w/CPT	$3,972
IQ250MA65114-3A	IQ250 w/2DO&2DI&4AO w/NEMA 3R Enclosure	$3,897
IQ250MA65114-3B	IQ250 w/2DO&2DI&4AO w/NEMA 3R Enclosure w/CPT	$4,056
IQ250MA65114-4A	IQ250 w/2DO&2DI&4AO w/NEMA 4X Enclosure	$3,994
IQ250MA65114-4B	IQ250 w/2DO&2DI&4AO w/NEMA 4X Enclosure w/CPT	$4,152

Enclosed Meters *(continued)*
Power Quality Metering Products

ENCLOSED METERS — SINGLE UNIT *(continued)*

Catalog Number	Description	List Price
w/IQ250/260 Meter Series (continued)		
IQ260MA65100-2A	IQ260 w/NEMA 12 Enclosure	$2,834
IQ260MA65100-2B	IQ260 w/NEMA 12 Enclosure w/CPT	$2,993
IQ260MA65100-3A	IQ260 w/NEMA 3R Enclosure	$2,918
IQ260MA65100-3B	IQ260 w/NEMA 3R Enclosure w/CPT	$3,077
IQ260MA65100-4A	IQ260 w/NEMA 4X Enclosure	$3,015
IQ260MA65100-4B	IQ260 w/NEMA 4X Enclosure w/CPT	$3,173
IQ260MA65110-2A	IQ260 w/2DO&2DI w/NEMA 12 Enclosure	$3,582
IQ260MA65110-2B	IQ260 w/2DO&2DI w/NEMA 12 Enclosure w/CPT	$3,741
IQ260MA65110-3A	IQ260 w/2DO&2DI w/NEMA 3R Enclosure	$3,667
IQ260MA65110-3B	IQ260 w/2DO&2DI w/NEMA 3R Enclosure w/CPT	$3,826
IQ260MA65110-4A	IQ260 w/2DO&2DI w/NEMA 4X Enclosure	$3,763
IQ260MA65110-4B	IQ260 w/2DO&2DI w/NEMA 4X Enclosure w/CPT	$3,921
IQ260MA65114-2A	IQ260 w/2DO&2DI&4AO w/NEMA 12 Enclosure	$4,266
IQ260MA65114-2B	IQ260 w/2DO&2DI&4AO w/NEMA 12 Enclosure w/CPT	$4,423
IQ260MA65114-3A	IQ260 w/2DO&2DI&4AO w/NEMA 3R Enclosure	$4,350
IQ260MA65114-3B	IQ260 w/2DO&2DI&4AO w/NEMA 3R Enclosure w/CPT	$4,508
IQ260MA65114-4A	IQ260 w/2DO&2DI&4AO w/NEMA 4X Enclosure	$4,445
IQ260MA65114-4B	IQ260 w/2DO&2DI&4AO w/NEMA 4X Enclosure w/CPT	$4,604
w/Power Xpert Meter 2000 Series		
PXM2250MA65105-2A	PXM2250 w/NEMA 12 Enclosure	$3,148
PXM2250MA65105-2B	PXM2250 w/NEMA 12 Enclosure w/CPT	$3,307
PXM2250MA65105-3A	PXM2250 w/NEMA 3R Enclosure	$3,233
PXM2250MA65105-3B	PXM2250 w/NEMA 3R Enclosure w/CPT	$3,392
PXM2250MA65105-4A	PXM2250 w/NEMA 4X Enclosure	$3,329
PXM2250MA65105-4B	PXM2250 w/NEMA 4X Enclosure w/CPT	$3,489
PXM2250MA65115-2A	PXM2250 w/2DO&2DI w/NEMA 12 Enclosure	$3,855
PXM2250MA65115-2B	PXM2250 w/2DO&2DI w/NEMA 12 Enclosure w/CPT	$4,014
PXM2250MA65115-3A	PXM2250 w/2DO&2DI w/NEMA 3R Enclosure	$3,940
PXM2250MA65115-3B	PXM2250 w/2DO&2DI w/NEMA 3R Enclosure w/CPT	$4,098
PXM2250MA65115-4A	PXM2250 w/2DO&2DI w/NEMA 4X Enclosure	$4,036
PXM2250MA65115-4B	PXM2250 w/2DO&2DI w/NEMA 4X Enclosure w/CPT	$4,195
PXM2250MA65145-2A	PXM2250 w/4AO 4-20 w/NEMA 12 Enclosure	$3,974
PXM2250MA65145-2B	PXM2250 w/4AO 4-20 w/NEMA 12 Enclosure w/CPT	$4,132
PXM2250MA65145-3A	PXM2250 w/4AO 4-20 w/NEMA 3R Enclosure	$4,058
PXM2250MA65145-3B	PXM2250 w/4AO 4-20 w/NEMA 3R Enclosure w/CPT	$4,217
PXM2250MA65145-4A	PXM2250 w/4AO 4-20 w/NEMA 4X Enclosure	$4,154
PXM2250MA65145-4B	PXM2250 w/4AO 4-20 w/NEMA 4X Enclosure w/CPT	$4,313
PXM2260MA65105-2A	PXM2260 w/NEMA 12 Enclosure	$3,566
PXM2260MA65105-2B	PXM2260 w/NEMA 12 Enclosure w/CPT	$3,725
PXM2260MA65105-3A	PXM2260 w/NEMA 3R Enclosure	$3,651
PXM2260MA65105-3B	PXM2260 w/NEMA 3R Enclosure w/CPT	$3,810
PXM2260MA65105-4A	PXM2260 w/NEMA 4X Enclosure	$3,747
PXM2260MA65105-4B	PXM2260 w/NEMA 4X Enclosure w/CPT	$3,906
PXM2260MA65115-2A	PXM2260 w/2DO&2DI w/NEMA 12 Enclosure	$4,274
PXM2260MA65115-2B	PXM2260 w/2DO&2DI w/NEMA 12 Enclosure w/CPT	$4,433
PXM2260MA65115-3A	PXM2260 w/2DO&2DI w/NEMA 3R Enclosure	$4,359
PXM2260MA65115-3B	PXM2260 w/2DO&2DI w/NEMA 3R Enclosure w/CPT	$4,518
PXM2260MA65115-4A	PXM2260 w/2DO&2DI w/NEMA 4X Enclosure	$4,455
PXM2260MA65115-4B	PXM2260 w/2DO&2DI w/NEMA 4X Enclosure w/CPT	$4,614
PXM2260MA65145-2A	PXM2260 w/4AO 4-20 w/NEMA 12 Enclosure	$4,393
PXM2260MA65145-2B	PXM2260 w/4AO 4-20 w/NEMA 12 Enclosure w/CPT	$4,551
PXM2260MA65145-3A	PXM2260 w/4AO 4-20 w/NEMA 3R Enclosure	$4,477
PXM2260MA65145-3B	PXM2260 w/4AO 4-20 w/NEMA 3R Enclosure w/CPT	$4,636
PXM2260MA65145-4A	PXM2260 w/4AO 4-20 w/NEMA 4X Enclosure	$4,573
PXM2260MA65145-4B	PXM2260 w/4AO 4-20 w/NEMA 4X Enclosure w/CPT	$4,732

Enclosed Meters *(continued)*
Power Quality Metering Products

ENCLOSED METERS — SINGLE UNIT *(continued)*

Catalog Number	Description	List Price
w/Power Xpert Meter 2000 Series *(continued)*		
PXM2270MA65105-2A	PXM2270 w/NEMA 12 Enclosure	$4,451
PXM2270MA65105-2B	PXM2270 w/NEMA 12 Enclosure w/CPT	$4,611
PXM2270MA65105-3A	PXM2270 w/NEMA 3R Enclosure	$4,535
PXM2270MA65105-3B	PXM2270 w/NEMA 3R Enclosure w/CPT	$4,694
PXM2270MA65105-4A	PXM2270 w/NEMA 4X Enclosure	$4,631
PXM2270MA65105-4B	PXM2270 w/NEMA 4X Enclosure w/CPT	$4,791
PXM2270MA65115-2A	PXM2270 w/2DO&2DI w/NEMA 12 Enclosure	$5,160
PXM2270MA65115-2B	PXM2270 w/2DO&2DI w/NEMA 12 Enclosure w/CPT	$5,320
PXM2270MA65115-3A	PXM2270 w/2DO&2DI w/NEMA 3R Enclosure	$5,245
PXM2270MA65115-3B	PXM2270 w/2DO&2DI w/NEMA 3R Enclosure w/CPT	$5,405
PXM2270MA65115-4A	PXM2270 w/2DO&2DI w/NEMA 4X Enclosure	$5,340
PXM2270MA65115-4B	PXM2270 w/2DO&2DI w/NEMA 4X Enclosure w/CPT	$5,505
PXM2270MA65145-2A	PXM2270 w/4AO 4-20 w/NEMA 12 Enclosure	$5,280
PXM2270MA65145-2B	PXM2270 w/4AO 4-20 w/NEMA 12 Enclosure w/CPT	$5,440
PXM2270MA65145-3A	PXM2270 w/4AO 4-20 w/NEMA 3R Enclosure	$5,370
PXM2270MA65145-3B	PXM2270 w/4AO 4-20 w/NEMA 3R Enclosure w/CPT	$5,530
PXM2270MA65145-4A	PXM2270 w/4AO 4-20 w/NEMA 4X Enclosure	$5,460
PXM2270MA65145-4B	PXM2270 w/4AO 4-20 w/NEMA 4X Enclosure w/CPT	$5,620
PXM2280MA65105-2B	PXM2280 w/NEMA 12 Enclosure w/CPT	$5,470
PXM2280MA65115-2B	PXM2280 w/2DO&2DI w/NEMA 12 Enclosure w/CPT	$5,965
PXM2280MA65145-3A	PXM2280 w/4AO 4-20 w/NEMA 3R Enclosure	$6,190
PXM2290MA65105-2B	PXM2290 w/NEMA 12 Enclosure w/CPT	$7,315
PXM2290MA65115-2B	PXM2290 w/2DO&2DI w/NEMA 12 Enclosure w/CPT	$7,830
PXM2290MA65145-2B	PXM2290 w/4AO 4-20 w/NEMA 12 Enclosure w/CPT	$8,314
w/Power Xpert Meter 4000/6000/8000 Series		
PXM4051A1BA-2A	PXM 4000 W/ COM. EXP. CARD W/NEMA 12 ENC W/DISPT	$11,455
PXM4051A1BA-2B	PXM 4000 W/ COM. EXP. CARD W/NEMA 12 ENC W/CPT W/DISP	$11,760
PXM4051A1BA-3A	PXM 4000 W/ COM. EXP. CARD W/NEMA 3R ENC W/DISP	$11,700
PXM4051A1BA-3B	PXM 4000 W/ COM. EXP. CARD W/NEMA 3R ENC W/CPT W/DISP	$12,130
PXM4051A1BA-4A	PXM 4000 W/ COM. EXP. CARD W/NEMA 4X ENC W/DISP	$14,335
PXM4051A1BA-4B	PXM 4000 W/ COM. EXP. CARD W/NEMA 4X ENC W/CPT W/DISP	$14,640
PXM4051A1BB-2A	PXM 4000 W/ COM. EXP. & I/O CARDS W/NEMA 12 ENC W/DISP	$12,120
PXM4051A1BB-2B	PXM 4000 W/ COM. EXP. & I/O CARDS W/NEMA 12 ENC W/CPT W/DISP	$12,430
PXM4051A1BB-3A	PXM 4000 W/ COM. EXP. & I/O CARDS W/NEMA 3R ENC W/DISP	$12,365
PXM4051A1BB-3B	PXM 4000 W/ COM. EXP. & I/O CARDS W/NEMA 3R ENC W/CPT W/DISP	$12,795
PXM4051A1BB-4A	PXM 4000 W/ COM. EXP. & I/O CARDS W/NEMA 4X ENC W/DISP	$15,000
PXM4051A1BB-4B	PXM 4000 W/ COM. EXP. & I/O CARDS W/NEMA 4X ENC W/CPT W/DISP	$15,305
PXM6051A1BA-2A	PXM 6000 W/ COM. EXP. CARD W/NEMA 12 ENC W/DISPT	$13,680
PXM6051A1BA-2B	PXM 6000 W/ COM. EXP. CARD W/NEMA 12 ENC W/CPT W/DISP	$13,985
PXM6051A1BA-3A	PXM 6000 W/ COM. EXP. CARD W/NEMA 3R ENC W/DISP	$13,925
PXM6051A1BA-3B	PXM 6000 W/ COM. EXP. CARD W/NEMA 3R ENC W/CPT W/DISP	$14,355
PXM6051A1BA-4A	PXM 6000 W/ COM. EXP. CARD W/NEMA 4X ENC W/DISP	$16,560
PXM6051A1BA-4B	PXM 6000 W/ COM. EXP. CARD W/NEMA 4X ENC W/CPT W/DISP	$16,865
PXM6051A1BB-2A	PXM 6000 W/ COM. EXP. & I/O CARDS W/NEMA 12 ENC W/DISP	$14,350
PXM6051A1BB-2B	PXM 6000 W/ COM. EXP. & I/O CARDS W/NEMA 12 ENC W/CPT W/DISP	$14,655
PXM6051A1BB-3A	PXM 6000 W/ COM. EXP. & I/O CARDS W/NEMA 3R ENC W/DISP	$14,595
PXM6051A1BB-3B	PXM 6000 W/ COM. EXP. & I/O CARDS W/NEMA 3R ENC W/CPT W/DISP	$15,020
PXM6051A1BB-4A	PXM 6000 W/ COM. EXP. & I/O CARDS W/NEMA 4X ENC W/DISP	$17,225
PXM6051A1BB-4B	PXM 6000 W/ COM. EXP. & I/O CARDS W/NEMA 4X ENC W/CPT W/DISP	$17,535

Enclosed Meters *(continued)*
Power Quality Metering Products

ENCLOSED METERS — SINGLE UNIT *(continued)*

Catalog Number	Description	List Price
w/Power Xpert Meter 4000/6000/8000 Series *(continued)*		
PXM8051A1BA-2A	PXM 8000 W/ COM. EXP. CARD W/NEMA 12 ENC W/DISPT	$15,905
PXM8051A1BA-2B	PXM 8000 W/ COM. EXP. CARD W/NEMA 12 ENC W/CPT W/DISP	$16,215
PXM8051A1BA-3A	PXM 8000 W/ COM. EXP. CARD W/NEMA 3R ENC W/DISP	$16,155
PXM8051A1BA-3B	PXM 8000 W/ COM. EXP. CARD W/NEMA 3R ENC W/CPT W/DISP	$16,580
PXM8051A1BA-4A	PXM 8000 W/ COM. EXP. CARD W/NEMA 4X ENC W/DISP	$18,785
PXM8051A1BA-4B	PXM 8000 W/ COM. EXP. CARD W/NEMA 4X ENC W/CPT W/DISP	$19,095
PXM8051A1BB-2A	PXM 8000 W/ COM. EXP. & I/O CARDS W/NEMA 12 ENC W/DISP	$16,575
PXM8051A1BB-2B	PXM 8000 W/ COM. EXP. & I/O CARDS W/NEMA 12 ENC W/CPT W/DISP	$16,880
PXM8051A1BB-3A	PXM 8000 W/ COM. EXP. & I/O CARDS W/NEMA 3R ENC W/DISP	$16,820
PXM8051A1BB-3B	PXM 8000 W/ COM. EXP. & I/O CARDS W/NEMA 3R ENC W/CPT W/DISP	$17,250
PXM8051A1BB-4A	PXM 8000 W/ COM. EXP. & I/O CARDS W/NEMA 4X ENC W/DISP	$19,455
PXM8051A1BB-4B	PXM 8000 W/ COM. EXP. & I/O CARDS W/NEMA 4X ENC W/CPT W/DISP	$19,760
PXM8251A1BA-2B	PXM 8000 W/ VAUX & COM. EXP. CARD W/NEMA 12 ENC W/CPT W/DISP	$18,330

Note: Enclosed Meters Includes Meter/Display, 60HZ, 5A, 90-265VAC

ENCLOSED METERS — MULTI-POINT

Catalog Number	Description	List Price
w/PXMP Series		
PXMP-MB-AB-2B-A	PXMP W/ABN W/NEMA 12 ENC W/120-240PS	$5,115
PXMP-MB-AB-2B-D	PXMP W/ABN W/NEMA 12 ENC W/120-240PS W/DISP	$6,115
PXMP-MB-AB-2C-A	PXMP W/ABN W/NEMA 12 ENC W/480PS	$5,200
PXMP-MB-AB-2C-D	PXMP W/ABN W/NEMA 12 ENC W/480PS W/DISP	$6,160
PXMP-MB-2B-A	PXMP W/ABCN W/NEMA 12 ENC W/120-240PS	$5,115
PXMP-MB-2B-D	PXMP W/ABCN W/NEMA 12 ENC W/120-240PS W/DISP	$6,115
PXMP-MB-2C-A	PXMP W/ABCN W/NEMA 12 ENC W/480PS	$5,200
PXMP-MB-2C-D	PXMP W/ABCN W/NEMA 12 ENC W/480PS W/DISP	$6,160

ENCLOSED METERS — MULTI UNIT

Catalog Number	Description	List Price
w/IQ35M Meter Series		
IQ35MA12-3A4C	4-IQ35Ms w/NEMA 3R Enclosure w/COMM	$8,430
IQ35MA12-4A4C	4-IQ35Ms w/NEMA 4X Enclosure w/COMM	$10,025
IQ35MA15-3A4A	4-IQ35Ms w/BACNET w/NEMA 3R w/4 Unit Enc	$8,815
w/IQ150 Meter Series		
IQ150MA6511-2A4C	4-IQ150s w/Modbus/KYZ Out w/NEMA 12 Enclosure w/COMM	$8,160
IQ150MA6511-2B4C	4-IQ150s w/Modbus/KYZ Out w/NEMA 12 Enclosure w/CPT w/COMM	$8,340
IQ150MA6511-3A4C	4-IQ150s w/Modbus/KYZ Out W/NEMA 3R Enclosure w/COMM	$8,875
IQ150MA6511-3B4C	4-IQ150s w/Modbus/KYZ Out W/NEMA 3R Enclosure w/CPT w/COMM	$9,060
IQ150MA6511-4A4C	4-IQ150s w/Modbus/KYZ Out w/NEMA 4X Enclosure w/COMM	$10,475
IQ150MA6511-4B4C	4-IQ150s w/Modbus/KYZ Out w/NEMA 4X Enclosure w/CPT w/COMM	$10,655
w/IQ250/260 Meter Series		
IQ250MA65100-2A4C	4-IQ250s w/NEMA 12 Enclosure w/COMM	$10,385
IQ250MA65100-2B4C	4-IQ250s w/NEMA 12 Enclosure w/CPT w/COMM	$10,570
IQ250MA65100-3A4C	4-IQ250s w/NEMA 3R Enclosure w/COMM	$11,100
IQ250MA65100-3B4C	4-IQ250s w/NEMA 3R Enclosure w/CPT w/COMM	$11,285
IQ250MA65100-4A4C	4-IQ250s w/NEMA 4X Enclosure w/COMM	$12,700
IQ250MA65100-4B4C	4-IQ250s w/NEMA 4X Enclosure w/CPT w/COMM	$12,885
IQ260MA65100-2A4C	4-IQ260s w/NEMA 12 Enclosure w/COMM	$12,030
IQ260MA65100-2B4C	4-IQ260s w/NEMA 12 Enclosure w/CPT w/COMM	$12,215
IQ260MA65100-3A4C	4-IQ260s w/NEMA 3R Enclosure w/COMM	$12,745
IQ260MA65100-3B4C	4-IQ260s w/NEMA 3R Enclosure w/CPT w/COMM	$12,930
IQ260MA65100-4A4C	4-IQ260s w/NEMA 4X Enclosure w/COMM	$14,345
IQ260MA65100-4B4C	4-IQ260s w/NEMA 4X Enclosure w/CPT w/COMM	$14,530

Enclosed Meters *(continued)*
Power Quality Metering Products

Single Unit Enclosed Meter ordering information

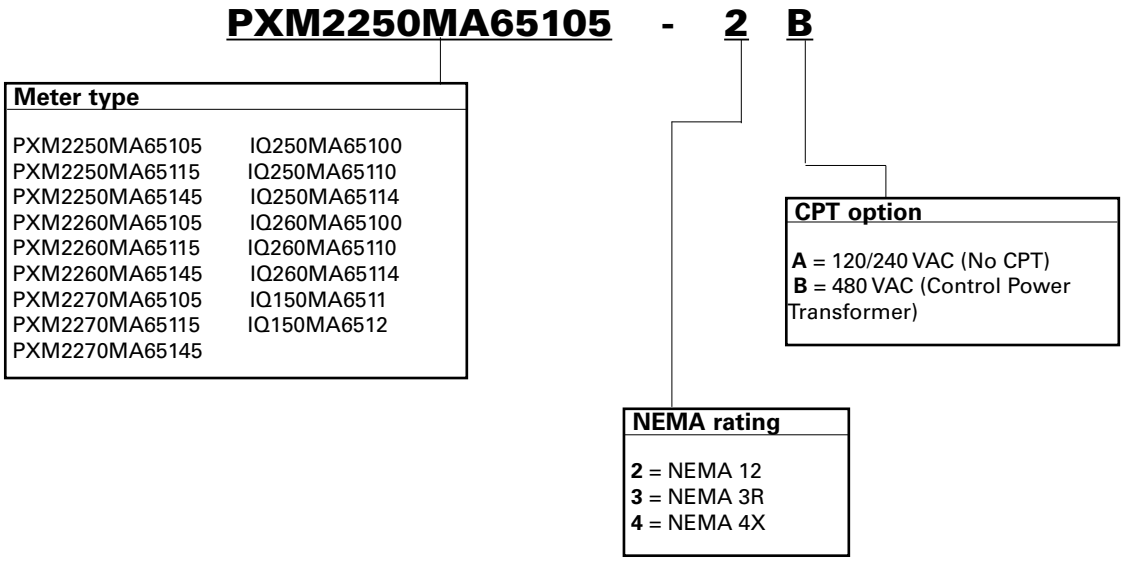

PXMP Enclosed Meter ordering information

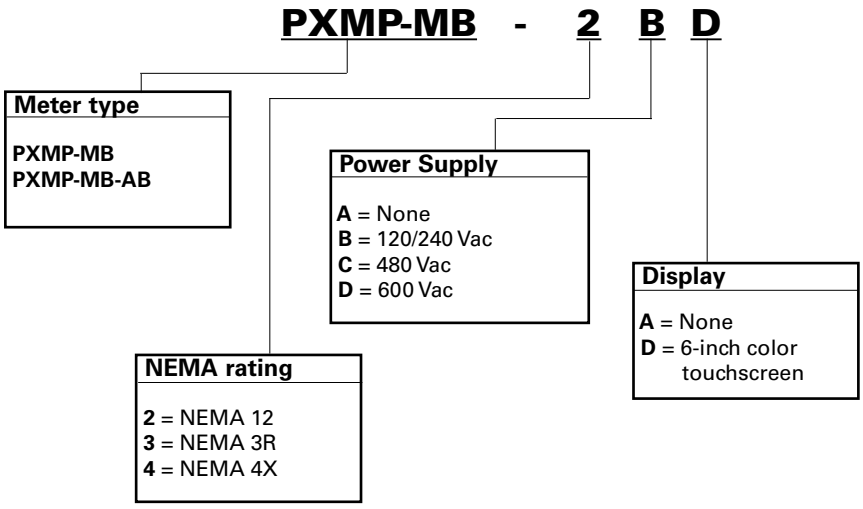

Enclosed Meters *(continued)*
Power Quality Metering Products

Multi Unit Enclosed Meter ordering information

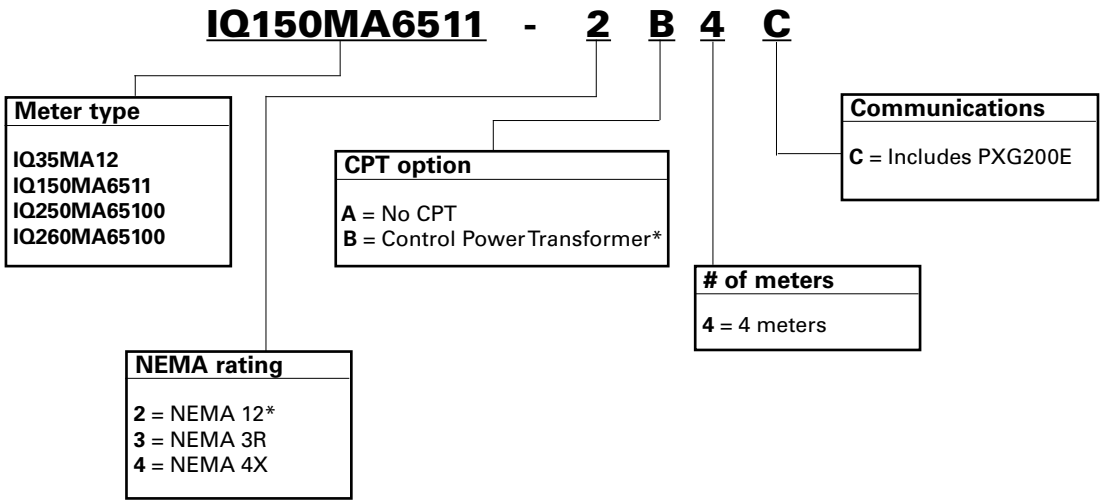

* Not available with IQ 35M

Enclosed Meters *(continued)*
Power Quality Metering Products

Eaton's IQ 150S/250S meters provide direct-reading metered values for the most critical power aspects, such as watts, watt demand, watthours, voltage-amperes (VA), VA-hours, vars, varhours and power factor. They have high sampling speed and accuracy. These meters are self-enclosed in a NEMA 12 Enclosure with "knock-outs" on the bottom for communication and power providing for an easy installation. Perhaps you don't have network drops in all the right places. No problem. The IQ 150S/250S offers a wireless communications option. The transmissions can be encrypted for security.



Features and benefits

- Self-enclosed, these meters are an ideal solution for surface mounting next to a selected piece of equipment for energy monitoring
- NEMA 12 Enclosure with a large, easy-to-read faceplate, consistent with other Eaton meter models, designed with 'knockouts' for easy installation
- Ethernet communications option for either wired or wireless setup allowing for additional ease of installation and integration into existing
- Available data and alarm recording for historical records/trending
- Integrate into Eaton's Power Xpert® Architecture for a holistic system-level view

SELF-ENCLOSED METERS

Catalog Number	Description	List Price
IQ 150S/250S Self-Enclosed Meters		
IQ150SA5511	IQ150 Self-Enclosed Meter 50HZ 5A 90-400V AC/DC w/Modbus RTU	$1,035
IQ150SA6511	IQ150 Self-Enclosed Meter 60HZ 5A 90-400V AC/DC w/Modbus RTU	$1,035
IQ150SA5111	IQ150 Self-Enclosed Meter 50HZ 1A 90-400V AC/DC w/Modbus RTU	$1,035
IQ150SA6111	IQ150 Self-Enclosed Meter 60HZ 1A 90-400V AC/DC w/Modbus RTU	$1,035
IQ150SA5512	IQ150 Self-Enclosed Meter 50HZ 5A 90-400V AC/DC w/WiFi	$1,507
IQ150SA6512	IQ150 Self-Enclosed Meter 60HZ 5A 90-400V AC/DC w/WiFi	$1,507
IQ150SA5112	IQ150 Self-Enclosed Meter 50HZ 1A 90-400V AC/DC w/WiFi	$1,507
IQ150SA6112	IQ150 Self-Enclosed Meter 60HZ 1A 90-400V AC/DC w/WiFi	$1,507
IQ250SA5511	IQ250 Self-Enclosed Meter 50HZ 5A 90-400V AC/DC w/Modbus RTU	$1,654
IQ250SA6511	IQ250 Self-Enclosed Meter 60HZ 5A 90-400V AC/DC w/Modbus RTU	$1,654
IQ250SA5111	IQ250 Self-Enclosed Meter 50HZ 1A 90-400V AC/DC w/Modbus RTU	$1,654
IQ250SA6111	IQ250 Self-Enclosed Meter 60HZ 1A 90-400V AC/DC w/Modbus RTU	$1,654
IQ250SA5512	IQ250 Self-Enclosed Meter 50HZ 5A 90-400V AC/DC w/WiFi	$2,127
IQ250SA6512	IQ250 Self-Enclosed Meter 60HZ 5A 90-400V AC/DC w/WiFi	$2,127
IQ250SA5112	IQ250 Self-Enclosed Meter 50HZ 1A 90-400V AC/DC w/WiFi	$2,127
IQ250SA6112	IQ250 Self-Enclosed Meter 60HZ 1A 90-400V AC/DC w/WiFi	$2,127

IQ 150S/250S Meter catalog numbering system

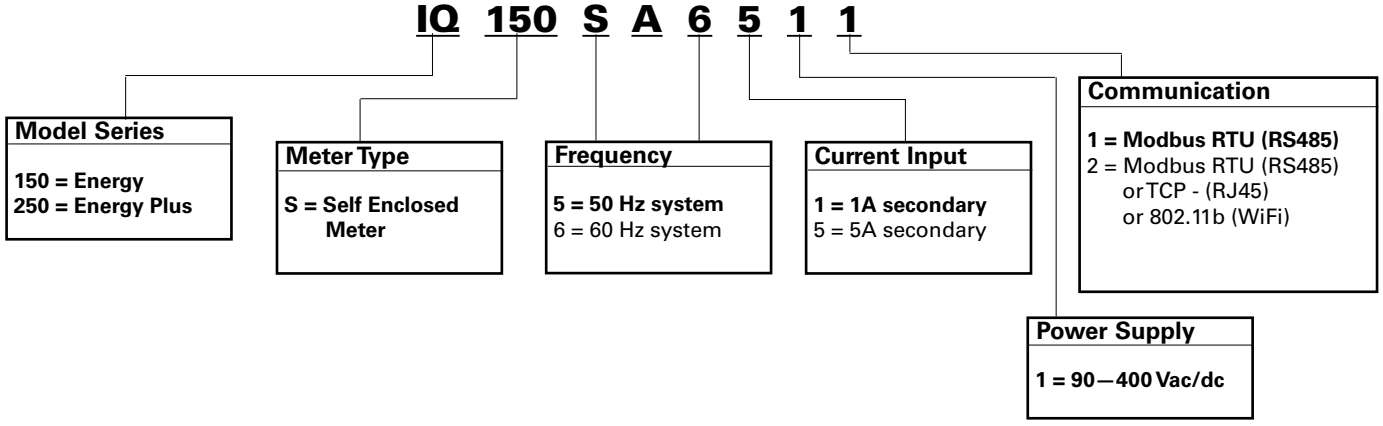

SOFTWARE

Software Products

UPS MANAGEMENT/SUPERVISORY SOFTWARE

Description	Part Number	List Price
Intelligent Power Manager, Silver edition: support for 11–100 IP addresses - all series	66925	$999
Intelligent Power Manager, Gold edition: support for unlimited IP addresses - all series	66926	$2,765
Eaton IPM Software Installation Service - One Day Onsite	SX06NXXX-001X	$3,250
Eaton IPM Software Installation Service - Two Day Onsite	SX06NXXX-002X	$5,250
Intelligent Power Software Suite CD: Bundled free-of-charge with Eaton UPSs (contains: Intelligent Power Manager supervisory software, Intelligent Power Protector protection software, Personal Solution-Pac power management software for non-networked Pulsar series UPSs, LanSafe power management software)	103004871	

EATON POWER XPERT INSIGHT™

	Part Number	List Price
Power Xpert Insight		
PXI for up to 10 device connections	PXI-A	$2,999
PXI for up to 25 device connections	PXI-B	$6,999
PXI for up to 50 device connections	PXI-C	$11,999
PXI for up to 100 device connections	PXI-D	$18,999
PXI for up to 200 device connections	PXI-E	$27,999
Power Xpert Insight Device Count Upgrades		
PXI 10 to 25 Upgrade	PXI-A2B	$3,639
PXI 10 to 50 Upgrade	PXI-A2C	$8,039
PXI 10 to 100 Upgrade	PXI-A2D	$14,439
PXI 10 to 200 Upgrade	PXI-A2E	$20,999
PXI 25 to 50 Upgrade	PXI-B2C	$3,839
PXI 25 to 100 Upgrade	PXI-B2D	$10,449
PXI 25 to 200 Upgrade	PXI-B2E	$16,799
PXI 50 to 100 Upgrade	PXI-C2D	$4,749
PXI 50 to 200 Upgrade	PXI-C2E	$11,759
PXI 100 to 200 Upgrade	PXI-D2E	$4,759

EATON POWER SOFTWARE

	Part Number	List Price
Power Xpert Software Professional Edition		
Power Xpert Software Professional Edition	PXS-PRO	$5,999
Power Xpert Software Professional Edition w/ 1 Day Startup*	PXS-PROn1S	$9,897
Power Xpert Software Professional Edition w/ 2 Day Startup*	PXS-PROn2S	$12,651
Power Xpert Software Professional Edition w/ 5 Day Startup*	PXS-PROn5S	$20,947
Power Xpert Software Professional Edition & Power Xpert Reporting	PXS-PROnPXR	$11,398
Power Xpert Software Enterprise Edition		
Power Xpert Software Enterprise Edition	PXS-ENT	$11,999
Power Xpert Software Enterprise Edition w/ 1 Day Startup*	PXS-ENTn1S	$15,297
Power Xpert Software Enterprise Edition w/ 2 Day Startup*	PXS-ENTn2S	$18,051
Power Xpert Software Enterprise Edition w/ 5 Day Startup*	PXS-ENTn5S	$26,347
Power Xpert Software Enterprise Edition & Power Xpert Reporting	PXS-ENTnPXR	$17,098

*N/A = Not available for international sales, services are available in continental USA only.

POWER XPERT SOFTWARE ACCESSORIES

Description	Part Number	List Price
Environmental Monitoring Probe	116750224-001	$220

The EMP requires connectivity through a communications card like the PXGX card to communicate with PXS

POWER XPERT REPORTING

Description	Part Number	List Price
Power Xpert Reporting - Single Source DB Connections *	PXR	$5,999
Power Xpert Reporting - up to 2 Source DB Connections *	PXR-2DB	$8,998
Power Xpert Reporting - up to 5 Source DB Connections *	PXR-5DB	$12,597
Power Xpert Reporting - up to 10 Source DB Connections *	PXR-10DB	$17,636
Power Xpert Reporting - up to 25 Source DB Connections *	PXR-25DB	$24,691
Power Xpert Reporting - up to 50 Source DB Connections *	PXR-50DB	$34,567

*Number of supported Source Database Connections to either Power Xpert Software or Foreseer

CONNECTIVITY
Connectivity Products

SOFTWARE COMPATIBILITY WITH UPS VIA USB OR SERIAL CABLE (PEER-TO-PEER)

	Powerware Series	Pulsar Series	Eaton BladeUPS
Protection and supervision software			
Intelligent Power Protector	x	x	x
Personal Solution-Pac		x	
Microsoft® Integrated Power Manager		x	
LanSafe	x	x	x

SOFTWARE AND CONNECTIVITY COMPATIBILITY WITH ETHERNET AND CONNECTIVITY CARD (NETWORK)

When purchasing additional software, make sure that it is compatible with your UPS's connectivity card.	Network Card-MS (Network-MS)	ConnectUPS-BD (116750222-001)	BestLink Web/SNMP Adapter (116750225-001)	Network and MODBUS Card-MS (MODBUS-MS)	X-Slot® Modbus Card (103005425-5591)	Power Xpert Gateway UPS (PXGXUPS)	Relay card-MS (Relay-MS)	Relay Interface Card-X-Slot (1018460)	Relay Interface Card-BestDock (1014018)
Supervision software—monitors and manages UPSs and connected devices									
Intelligent Power Manager	x	x		x	x	x			
Foreseer and Power Xpert Software - Professional/Enterprise	x	x		x	x	x			
LanSafe		x			x				
Protection software—graceful shutdown of OSs on servers and PCs									
Intelligent Power Protector	x	x		x	x	x			
NetWatch	x	x		x	x	x			
Network Shutdown Module	x			x					
Power Xpert Software - Professional and Enterprise Editions	x	x			x	x			
LanSafe		x							
Enterprise Power Monitoring Software									
Power Xpert Insight	x	x			x	x			
Power Xpert Software - Professional and Enterprise Editions	x	x			x	x			
Foreseer Services	x	x		x	x	x			
Connectivity compatibility									
3S, 5110, 5115 tower, 5S and 5SC									
5115 RM					x	x		x	
5125					x	x		x	
Evolution	x						x		
5P/5PX	x						x		
EX	x			x			x		
9130	x	x		x					x
9PX	x			x			x		
9155						x		x	
9170+		x							x
FERRUPS			x						
BladeUPS					x	x		x	
9315					x	x		x	
9355					x	x		x	
93E	x			x			x		
9390					x	x		x	
9390IT					x	x		x	
9395					x	x		x	

*Also compatible with the following high voltage series: Ellipse, Ellipse Max, Protection Center, Protection Station

CONNECTIVITY *(continued)*
Connectivity Options

WEB/SNMP PRODUCTS

Description	Part Number	List Price
ConnectUPS-BD Web/SNMP Card (for use with 9130 and 9170+)	116750222-001	$335
ConnectUPS-E Web/SNMP Adapter (for use with legacy Powerware 9150 and 9305 UPSs)	116750223-001	$493
Ethernet SNMP/HTTP Adapter (for use with FERRUPS)	116750225-001	$349
Network Card-MS Web/SNMP (for use with 5PX, 9130, 9PX)	Network-MS	$279
Power Xpert Gateway PDP Card (Web/SNMP/Modbus TCP)	103008064-5591	$950
Power Xpert Gateway UPS Card (for use with 9x55 and BladeUPS 9315,9390,9395)	103007974-5591	$450

INTEGRATION PRODUCTS (EXPANDED CONNECTIVITY & OPEN SYSTEM INTEGRATION) - POWERWARE AND EATON SERIES

Description	Part Number	List Price
Expansion Chassis - Provides additional X-Slots via RS-232 DB9 (Includes Modbus Card)	05147063	$1,658
Modbus Card-X-Slot	103005425-5591	$661
Network and MODBUS Card-MS (for use with 5PX, MX, EX RT, 93E, 9130)	MODBUS-MS	$335

CONNECTIVITY AND ENVIRONMENTAL ACCESSORIES

Description	Part Number	List Price
Environmental Monitoring Probe	116750224-001	$220

RELAY INTERFACE/REMOTE MONITORING PRODUCTS

Description	Part Number	List Price
Relay Card-MS (new card name and part number replacing style #s 103006828 and 66104)	103006828/RELAY-MS	$100
Relay Interface Card-BD (AS/400 Compatible)	1014018	$146
Relay Interface Card-X-Slot (AS/400 Compatible) (for use with 5115,5125,9140,9155,BladeUPS,9315,9390,9395)	1018460	$146
Cable 25 ft (compatible with AS/400 model 9406; for use with 1014018 or 1018460)	103004349-5501	$62
Cable 75 ft (compatible with AS/400 model 9406; for use with 1014018 or 1018460)	103004347-5501	$104
Industrial Relay and Display Drive Card X-Slot. (for use with 9155, 9355, BladeUPS,9390) Provides (4) Form-C Relay contacts (5A @ 250V) for UPS integration into security and alarm systems. Also provides signal information for the Remote Monitor Display Panel (103002687-001)	103003055	$335
Relay Card - Contacts (DB25) & RS232 (DB9) - X-Slot. Includes 30 ft cable DB25 - DB9. (compatible with AS/400 model 9406)	103004741-5591	$314
Cable 10 ft DB9 - DB9 (compatible with AS/400 model 9406; for use with 103006828)	66033	$100

REMOTE MONITORING PANELS (FOR MONITORING OF UPS STATUS) - POWERWARE SERIES

Description	Part Number	List Price
Remote Monitor Display Panel (Requires Industrial Relay and Display Drive Card Part Number 103003055)	103002687-001	$335

INTEGRATION SOFTWARE - POWERWARE AND EATON SERIES

Description	Web Download	List Price
IBM Director Snap-in: Network Management System (NMS) software	powerquality.eaton.com	Free-of-charge

SURGE PROTECTION
PSPD SERIES

Eaton's PSPD series of surge protection devices ensure that critical equipment is protected with the safest, most reliable and most advanced UL 1449 3rd Edition certified surge protectors. The array of features, options, and configurations ensures there is a unit for all electrical applications, including service entrances, data centers, critical distribution switchboards and panelboards, and PDU's and RPP's.



- Common voltages and configurations as well as a variety of surge current capacity ratings from 50 through 400 kA provide application flexibility.
- UL 1449 3rd Edition recognized component for the United States and Canada, covered by Underwriters Laboratories certification and follow-up service.
- Utilizes self-protected protected metal oxide varistor (MOV) technology, which provides both high energy capacity and fail-safe operation.
- Side mount units offer factory-sealed assembly, which prevents arc flash and shock hazards.
- Standard units include EMI/RFI filtering to provide effective protection for sensitive electronic loads.
- Side mount units contain no replaceable parts or items that require periodic maintenance thus reducing maintenance costs.

Description	Part Number	Dimensions (H x W x D, inches)	Weight (lb)	List Price	Part Number	Dimensions (H x W x D, inches)	Weight (lb)	List Price
PSPD 050 (50 kA/phase surge rating)								
Standard with Surge Counter Diagnostics	'K' Option - No Integral Disconnect				'M' Option - Integral Disconnect			
208/120 Wye Three-phase (4W + G)	PSPD050208Y3K	10.5 x 7.5 x 3.5	7.0	$1,089	PSPD050208Y3M	11.0 x 11.5 x 6.0	14.0	$1,586
120/240 Single Split-phase (3W + G)	PSPD050240S3K	10.5 x 7.5 x 3.5	7.0	$1,184	PSPD050240S3M	11.0 x 11.5 x 6.0	14.0	$1,683
240 Delta (3W + G)	PSPD050240D3K	10.5 x 7.5 x 3.5	7.0	$1,280	PSPD050240D3M	11.0 x 11.5 x 6.0	14.0	$1,771
480 Delta (3W + G)	PSPD050480D3K	10.5 x 7.5 x 3.5	7.0	$1,280	PSPD050480D3M	11.0 x 11.5 x 6.0	14.0	$1,771
400/230 Wye Three-phase (4W + G)	PSPD050400Y3K	10.5 x 7.5 x 3.5	7.0	$1,280	PSPD050400Y3M	11.0 x 11.5 x 6.0	14.0	$1,771
480/277 Wye Three-phase (4W + G)	PSPD050480Y3K	10.5 x 7.5 x 3.5	7.0	$1,280	PSPD050480Y3M	11.0 x 11.5 x 6.0	14.0	$1,771
Standard Diagnostics	'K' Option - No Integral Disconnect				'M' Option - Integral Disconnect			
208/120 Wye Three-phase (4W + G)	PSPD050208Y2K	10.5 x 7.5 x 3.5	7.0	$910	PSPD050208Y2M	11.0 x 11.5 x 6.0	14.0	$1,409
120/240 Single Split-phase (3W + G)	PSPD050240S2K	10.5 x 7.5 x 3.5	7.0	$1,006	PSPD050240S2M	11.0 x 11.5 x 6.0	14.0	$1,498
240 Delta (3W + G)	PSPD050240D2K	10.5 x 7.5 x 3.5	7.0	$1,089	PSPD050240D2M	11.0 x 11.5 x 6.0	14.0	$1,586
480 Delta (3W + G)	PSPD050480D2K	10.5 x 7.5 x 3.5	7.0	$1,089	PSPD050480D2M	11.0 x 11.5 x 6.0	14.0	$1,586
400/230 Wye Three-phase (4W + G)	PSPD050400Y2K	10.5 x 7.5 x 3.5	7.0	$1,089	PSPD050400Y2M	11.0 x 11.5 x 6.0	14.0	$1,586
480/277 Wye Three-phase (4W + G)	PSPD050480Y2K	10.5 x 7.5 x 3.5	7.0	$1,089	PSPD050480Y2M	11.0 x 11.5 x 6.0	14.0	$1,586
Basic Diagnostics	'K' Option - No Integral Disconnect				'M' Option - Integral Disconnect			
208/120 Wye Three-phase (4W + G)	PSPD050208Y1K	10.5 x 7.5 x 3.5	7.0	$870	PSPD050208Y1M	11.0 x 11.5 x 6.0	14.0	$1,363
120/240 Single Split-phase (3W + G)	PSPD050240S1K	10.5 x 7.5 x 3.5	7.0	$952	PSPD050240S1M	11.0 x 11.5 x 6.0	14.0	$1,450
240 Delta (3W + G)	PSPD050240D1K	10.5 x 7.5 x 3.5	7.0	$1,048	PSPD050240D1M	11.0 x 11.5 x 6.0	14.0	$1,539
480 Delta (3W + G)	PSPD050480D1K	10.5 x 7.5 x 3.5	7.0	$1,048	PSPD050480D1M	11.0 x 11.5 x 6.0	14.0	$1,539
400/230 Wye Three-phase (4W + G)	PSPD050400Y1K	10.5 x 7.5 x 3.5	7.0	$1,048	PSPD050400Y1M	11.0 x 11.5 x 6.0	14.0	$1,539
480/277 Wye Three-phase (4W + G)	PSPD050480Y1K	10.5 x 7.5 x 3.5	7.0	$1,048	PSPD050480Y1M	11.0 x 11.5 x 6.0	14.0	$1,539
PSPD 080 (80 kA/phase surge rating)								
Standard with Surge Counter Diagnostics	'K' Option - No Integral Disconnect				'M' Option - Integral Disconnect			
208/120 Wye Three-phase (4W + G)	PSPD080208Y3K	10.5 x 7.5 x 3.5	7.0	$1,462	PSPD080208Y3M	11.0 x 11.5 x 6.0	14.0	$1,876
120/240 Single Split-phase (3W + G)	PSPD080240S3K	10.5 x 7.5 x 3.5	7.0	$1,587	PSPD080240S3M	11.0 x 11.5 x 6.0	14.0	$2,001
240 Delta (3W + G)	PSPD080240D3K	10.5 x 7.5 x 3.5	7.0	$1,712	PSPD080240D3M	11.0 x 11.5 x 6.0	14.0	$2,126
480 Delta (3W + G)	PSPD080480D3K	10.5 x 7.5 x 3.5	7.0	$1,712	PSPD080480D3M	11.0 x 11.5 x 6.0	14.0	$2,126
400/230 Wye Three-phase (4W + G)	PSPD080400Y3K	10.5 x 7.5 x 3.5	7.0	$1,712	PSPD080400Y3M	11.0 x 11.5 x 6.0	14.0	$2,126
480/277 Wye Three-phase (4W + G)	PSPD080480Y3K	10.5 x 7.5 x 3.5	7.0	$1,712	PSPD080480Y3M	11.0 x 11.5 x 6.0	14.0	$2,126

SURGE PROTECTION *(continued)*
PSPD SERIES

Description	Part Number	Dimensions (H x W x D, inches)	Weight (lb)	List Price	Part Number	Dimensions (H x W x D, inches)	Weight (lb)	List Price
PSPD 080 (80 kA/phase surge rating) (continued)								
Standard Diagnostics	'K' Option - No Integral Disconnect				'M' Option - Integral Disconnect			
208/120 Wye Three-phase (4W + G)	PSPD080208Y2K	10.5 x 7.5 x 3.5	7.0	$1,211	PSPD080208Y2M	11.0 x 11.5 x 6.0	14.0	$1,624
120/240 Single Split-phase (3W + G)	PSPD080240S2K	10.5 x 7.5 x 3.5	7.0	$1,336	PSPD080240S2M	11.0 x 11.5 x 6.0	14.0	$1,751
240 Delta (3W + G)	PSPD080240D2K	10.5 x 7.5 x 3.5	7.0	$1,336	PSPD080240D2M	11.0 x 11.5 x 6.0	14.0	$1,876
480 Delta (3W + G)	PSPD080480D2K	10.5 x 7.5 x 3.5	7.0	$1,462	PSPD080480D2M	11.0 x 11.5 x 6.0	14.0	$1,876
400/230 Wye Three-phase (4W + G)	PSPD080400Y2K	10.5 x 7.5 x 3.5	7.0	$1,462	PSPD080400Y2M	11.0 x 11.5 x 6.0	14.0	$1,876
480/277 Wye Three-phase (4W + G)	PSPD080480Y2K	10.5 x 7.5 x 3.5	7.0	$1,462	PSPD080480Y2M	11.0 x 11.5 x 6.0	14.0	$1,876
Basic Diagnostics	'K' Option - No Integral Disconnect				'M' Option - Integral Disconnect			
208/120 Wye Three-phase (4W + G)	PSPD080208Y1K	10.5 x 7.5 x 3.5	7.0	$1,148	PSPD080208Y1M	11.0 x 11.5 x 6.0	14.0	$1,562
120/240 Single Split-phase (3W + G)	PSPD080240S1K	10.5 x 7.5 x 3.5	7.0	$1,267	PSPD080240S1M	11.0 x 11.5 x 6.0	14.0	$1,681
240 Delta (3W + G)	PSPD080240D1K	10.5 x 7.5 x 3.5	7.0	$1,387	PSPD080240D1M	11.0 x 11.5 x 6.0	14.0	$1,800
480 Delta (3W + G)	PSPD080480D1K	10.5 x 7.5 x 3.5	7.0	$1,392	PSPD080480D1M	11.0 x 11.5 x 6.0	14.0	$1,806
400/230 Wye Three-phase (4W + G)	PSPD080400Y1K	10.5 x 7.5 x 3.5	7.0	$1,392	PSPD080400Y1M	11.0 x 11.5 x 6.0	14.0	$1,806
480/277 Wye Three-phase (4W + G)	PSPD080480Y1K	10.5 x 7.5 x 3.5	7.0	$1,392	PSPD080480Y1M	11.0 x 11.5 x 6.0	14.0	$1,806
PSPD 100 (100 kA/phase surge rating)								
Standard with Surge Counter Diagnostics	'K' Option - No Integral Disconnect				'M' Option - Integral Disconnect			
208/120 Wye Three-phase (4W + G)	PSPD100208Y3K	10.5 x 7.5 x 3.5	7.0	$1,651	PSPD100208Y3M	11.0 x 11.5 x 6.0	14.0	$2,051
120/240 Single Split-phase (3W + G)	PSPD100240S3K	10.5 x 7.5 x 3.5	7.0	$1,791	PSPD100240S3M	11.0 x 11.5 x 6.0	14.0	$2,191
240 Delta (3W + G)	PSPD100240D3K	10.5 x 7.5 x 3.5	7.0	$1,927	PSPD100240D3M	11.0 x 11.5 x 6.0	14.0	$2,327
480 Delta (3W + G)	PSPD100480D3K	10.5 x 7.5 x 3.5	7.0	$1,927	PSPD100480D3M	11.0 x 11.5 x 6.0	14.0	$2,327
400/230 Wye Three-phase (4W + G)	PSPD100400Y3K	10.5 x 7.5 x 3.5	7.0	$1,927	PSPD100400Y3M	11.0 x 11.5 x 6.0	14.0	$2,327
480/277 Wye Three-phase (4W + G)	PSPD100480Y3K	10.5 x 7.5 x 3.5	7.0	$1,927	PSPD100480Y3M	11.0 x 11.5 x 6.0	14.0	$2,327
Standard Diagnostics	'K' Option - No Integral Disconnect				'M' Option - Integral Disconnect			
208/120 Wye Three-phase (4W + G)	PSPD100208Y2K	10.5 x 7.5 x 3.5	7.0	$1,371	PSPD100208Y2M	11.0 x 11.5 x 6.0	14.0	$1,771
120/240 Single Split-phase (3W + G)	PSPD100240S2K	10.5 x 7.5 x 3.5	7.0	$1,509	PSPD100240S2M	11.0 x 11.5 x 6.0	14.0	$1,909
240 Delta (3W + G)	PSPD100240D2K	10.5 x 7.5 x 3.5	7.0	$1,646	PSPD100240D2M	11.0 x 11.5 x 6.0	14.0	$2,046
480 Delta (3W + G)	PSPD100480D2K	10.5 x 7.5 x 3.5	7.0	$1,646	PSPD100480D2M	11.0 x 11.5 x 6.0	14.0	$2,046
400/230 Wye Three-phase (4W + G)	PSPD100400Y2K	10.5 x 7.5 x 3.5	7.0	$1,646	PSPD100400Y2M	11.0 x 11.5 x 6.0	14.0	$2,046
480/277 Wye Three-phase (4W + G)	PSPD100480Y2K	10.5 x 7.5 x 3.5	7.0	$1,646	PSPD100480Y2M	11.0 x 11.5 x 6.0	14.0	$2,046
Basic Diagnostics	'K' Option - No Integral Disconnect				'M' Option - Integral Disconnect			
208/120 Wye Three-phase (4W + G)	PSPD100208Y1K	10.5 x 7.5 x 3.5	7.0	$1,271	PSPD100208Y1M	11.0 x 11.5 x 6.0	14.0	$1,671
120/240 Single Split-phase (3W + G)	PSPD100240S1K	10.5 x 7.5 x 3.5	7.0	$1,396	PSPD100240S1M	11.0 x 11.5 x 6.0	14.0	$1,796
240 Delta (3W + G)	PSPD100240D1K	10.5 x 7.5 x 3.5	7.0	$1,521	PSPD100240D1M	11.0 x 11.5 x 6.0	14.0	$1,921
480 Delta (3W + G)	PSPD100480D1K	10.5 x 7.5 x 3.5	7.0	$1,521	PSPD100480D1M	11.0 x 11.5 x 6.0	14.0	$1,921
400/230 Wye Three-phase (4W + G)	PSPD100400Y1K	10.5 x 7.5 x 3.5	7.0	$1,521	PSPD100400Y1M	11.0 x 11.5 x 6.0	14.0	$1,921
480/277 Wye Three-phase (4W + G)	PSPD100480Y1K	10.5 x 7.5 x 3.5	7.0	$1,521	PSPD100480Y1M	11.0 x 11.5 x 6.0	14.0	$1,921
PSPD 120 (120 kA/phase surge rating)								
Standard with Surge Counter Diagnostics	'K' Option - No Integral Disconnect				'M' Option - Integral Disconnect			
208/120 Wye Three-phase (4W + G)	PSPD120208Y3K	10.5 x 7.5 x 3.5	7.0	$2,013	PSPD120208Y3M	11.0 x 11.5 x 6.0	14.0	$2,534
120/240 Single Split-phase (3W + G)	PSPD120240S3K	10.5 x 7.5 x 3.5	7.0	$2,183	PSPD120240S3M	11.0 x 11.5 x 6.0	14.0	$2,704
240 Delta (3W + G)	PSPD120240D3K	10.5 x 7.5 x 3.5	7.0	$2,359	PSPD120240D3M	11.0 x 11.5 x 6.0	14.0	$2,882
480 Delta (3W + G)	PSPD120480D3K	10.5 x 7.5 x 3.5	7.0	$2,359	PSPD120480D3M	11.0 x 11.5 x 6.0	14.0	$2,882
400/230 Wye Three-phase (4W + G)	PSPD120400Y3K	10.5 x 7.5 x 3.5	7.0	$2,359	PSPD120400Y3M	11.0 x 11.5 x 6.0	14.0	$2,882
480/277 Wye Three-phase (4W + G)	PSPD120480Y3K	10.5 x 7.5 x 3.5	7.0	$2,359	PSPD120480Y3M	11.0 x 11.5 x 6.0	14.0	$2,882

SURGE PROTECTION *(continued)*
PSPD SERIES

Description	Part Number	Dimensions (H x W x D, inches)	Weight (lb)	List Price	Part Number	Dimensions (H x W x D, inches)	Weight (lb)	List Price
PSPD 120 (120 kA/phase surge rating) (continued)								
Standard Diagnostics	'K' Option - No Integral Disconnect				'M' Option - Integral Disconnect			
208/120 Wye Three-phase (4W + G)	PSPD120208Y2K	10.5 x 7.5 x 3.5	7.0	$1,720	PSPD120208Y2M	11.0 x 11.5 x 6.0	14.0	$2,242
120/240 Single Split-phase (3W + G)	PSPD120240S2K	10.5 x 7.5 x 3.5	7.0	$1,889	PSPD120240S2M	11.0 x 11.5 x 6.0	14.0	$2,412
240 Delta (3W + G)	PSPD120240D2K	10.5 x 7.5 x 3.5	7.0	$2,064	PSPD120240D2M	11.0 x 11.5 x 6.0	14.0	$2,588
480 Delta (3W + G)	PSPD120480D2K	10.5 x 7.5 x 3.5	7.0	$2,064	PSPD120480D2M	11.0 x 11.5 x 6.0	14.0	$2,588
400/230 Wye Three-phase (4W + G)	PSPD120400Y2K	10.5 x 7.5 x 3.5	7.0	$2,064	PSPD120400Y2M	11.0 x 11.5 x 6.0	14.0	$2,588
480/277 Wye Three-phase (4W + G)	PSPD120480Y2K	10.5 x 7.5 x 3.5	7.0	$2,064	PSPD120480Y2M	11.0 x 11.5 x 6.0	14.0	$2,588
Basic Diagnostics	'K' Option - No Integral Disconnect				'M' Option - Integral Disconnect			
208/120 Wye Three-phase (4W + G)	PSPD120208Y1K	10.5 x 7.5 x 3.5	7.0	$1,590	PSPD120208Y1M	11.0 x 11.5 x 6.0	14.0	$2,111
120/240 Single Split-phase (3W + G)	PSPD120240S1K	10.5 x 7.5 x 3.5	7.0	$1,746	PSPD120240S1M	11.0 x 11.5 x 6.0	14.0	$2,268
240 Delta (3W + G)	PSPD120240D1K	10.5 x 7.5 x 3.5	7.0	$1,908	PSPD120240D1M	11.0 x 11.5 x 6.0	14.0	$2,431
480 Delta (3W + G)	PSPD120480D1K	10.5 x 7.5 x 3.5	7.0	$1,908	PSPD120480D1M	11.0 x 11.5 x 6.0	14.0	$2,431
400/230 Wye Three-phase (4W + G)	PSPD120400Y1K	10.5 x 7.5 x 3.5	7.0	$1,908	PSPD120400Y1M	11.0 x 11.5 x 6.0	14.0	$2,431
480/277 Wye Three-phase (4W + G)	PSPD120480Y1K	10.5 x 7.5 x 3.5	7.0	$1,908	PSPD120480Y1M	11.0 x 11.5 x 6.0	14.0	$2,431
PSPD 160 (160 kA/phase surge rating)								
Standard with Surge Counter Diagnostics	'K' Option - No Integral Disconnect				'M' Option - Integral Disconnect			
208/120 Wye Three-phase (4W + G)	PSPD160208Y3K	10.5 x 7.5 x 3.5	7.0	$2,515	PSPD160208Y3M	11.0 x 11.5 x 6.0	14.0	$3,151
120/240 Single Split-phase (3W + G)	PSPD160240S3K	10.5 x 7.5 x 3.5	7.0	$2,738	PSPD160240S3M	11.0 x 11.5 x 6.0	14.0	$3,373
240 Delta (3W + G)	PSPD160240D3K	10.5 x 7.5 x 3.5	7.0	$2,960	PSPD160240D3M	11.0 x 11.5 x 6.0	14.0	$3,595
480 Delta (3W + G)	PSPD160480D3K	10.5 x 7.5 x 3.5	7.0	$2,960	PSPD160480D3M	11.0 x 11.5 x 6.0	14.0	$3,595
400/230 Wye Three-phase (4W + G)	PSPD160400Y3K	10.5 x 7.5 x 3.5	7.0	$2,960	PSPD160400Y3M	11.0 x 11.5 x 6.0	14.0	$3,595
480/277 Wye Three-phase (4W + G)	PSPD160480Y3K	10.5 x 7.5 x 3.5	7.0	$2,960	PSPD160480Y3M	11.0 x 11.5 x 6.0	14.0	$3,595
Standard Diagnostics	'K' Option - No Integral Disconnect				'M' Option - Integral Disconnect			
208/120 Wye Three-phase (4W + G)	PSPD160208Y2K	10.5 x 7.5 x 3.5	7.0	$2,230	PSPD160208Y2M	11.0 x 11.5 x 6.0	14.0	$2,865
120/240 Single Split-phase (3W + G)	PSPD160240S2K	10.5 x 7.5 x 3.5	7.0	$2,453	PSPD160240S2M	11.0 x 11.5 x 6.0	14.0	$3,086
240 Delta (3W + G)	PSPD160240D2K	10.5 x 7.5 x 3.5	7.0	$2,675	PSPD160240D2M	11.0 x 11.5 x 6.0	14.0	$3,309
480 Delta (3W + G)	PSPD160480D2K	10.5 x 7.5 x 3.5	7.0	$2,675	PSPD160480D2M	11.0 x 11.5 x 6.0	14.0	$3,309
400/230 Wye Three-phase (4W + G)	PSPD160400Y2K	10.5 x 7.5 x 3.5	7.0	$2,675	PSPD160400Y2M	11.0 x 11.5 x 6.0	14.0	$3,309
480/277 Wye Three-phase (4W + G)	PSPD160480Y2K	10.5 x 7.5 x 3.5	7.0	$2,675	PSPD160480Y2M	11.0 x 11.5 x 6.0	14.0	$3,309
Basic Diagnostics	'K' Option - No Integral Disconnect				'M' Option - Integral Disconnect			
208/120 Wye Three-phase (4W + G)	PSPD160208Y1K	10.5 x 7.5 x 3.5	7.0	$2,066	PSPD160208Y1M	11.0 x 11.5 x 6.0	14.0	$2,700
120/240 Single Split-phase (3W + G)	PSPD160240S1K	10.5 x 7.5 x 3.5	7.0	$2,269	PSPD160240S1M	11.0 x 11.5 x 6.0	14.0	$2,902
240 Delta (3W + G)	PSPD160240D1K	10.5 x 7.5 x 3.5	7.0	$2,478	PSPD160240D1M	11.0 x 11.5 x 6.0	14.0	$3,112
480 Delta (3W + G)	PSPD160480D1K	10.5 x 7.5 x 3.5	7.0	$2,478	PSPD160480D1M	11.0 x 11.5 x 6.0	14.0	$3,112
400/230 Wye Three-phase (4W + G)	PSPD160400Y1K	10.5 x 7.5 x 3.5	7.0	$2,478	PSPD160400Y1M	11.0 x 11.5 x 6.0	14.0	$3,112
480/277 Wye Three-phase (4W + G)	PSPD160480Y1K	10.5 x 7.5 x 3.5	7.0	$2,478	PSPD160480Y1M	11.0 x 11.5 x 6.0	14.0	$3,112
PSPD 200 (200 kA/phase surge rating)								
Standard with Surge Counter Diagnostics	'K' Option - No Integral Disconnect				'M' Option - Integral Disconnect			
208/120 Wye Three-phase (4W + G)	PSPD200208Y3K	10.5 x 7.5 x 3.5	7.0	$3,150	PSPD200208Y3M	11.0 x 11.5 x 6.0	14.0	$3,995
120/240 Single Split-phase (3W + G)	PSPD200240S3K	10.5 x 7.5 x 3.5	7.0	$3,435	PSPD200240S3M	11.0 x 11.5 x 6.0	14.0	$4,280
240 Delta (3W + G)	PSPD200240D3K	10.5 x 7.5 x 3.5	7.0	$3,721	PSPD200240D3M	11.0 x 11.5 x 6.0	14.0	$4,567
480 Delta (3W + G)	PSPD200480D3K	10.5 x 7.5 x 3.5	7.0	$3,721	PSPD200480D3M	11.0 x 11.5 x 6.0	14.0	$4,567
400/230 Wye Three-phase (4W + G)	PSPD200400Y3K	10.5 x 7.5 x 3.5	7.0	$3,721	PSPD200400Y3M	11.0 x 11.5 x 6.0	14.0	$4,567
480/277 Wye Three-phase (4W + G)	PSPD200480Y3K	10.5 x 7.5 x 3.5	7.0	$3,721	PSPD200480Y3M	11.0 x 11.5 x 6.0	14.0	$4,567

SURGE PROTECTION *(continued)*
PSPD SERIES

Description	Part Number	Dimensions (H x W x D, inches)	Weight (lb)	List Price	Part Number	Dimensions (H x W x D, inches)	Weight (lb)	List Price
PSPD 200 (200 kA/phase surge rating) (continued)								
Standard Diagnostics	'K' Option - No Integral Disconnect				'M' Option - Integral Disconnect			
208/120 Wye Three-phase (4W + G)	PSPD200208Y2K	10.5 x 7.5 x 3.5	7.0	$2,857	PSPD200208Y2M	11.0 x 11.5 x 6.0	14.0	$3,702
120/240 Single Split-phase (3W + G)	PSPD200240S2K	10.5 x 7.5 x 3.5	7.0	$3,142	PSPD200240S2M	11.0 x 11.5 x 6.0	14.0	$3,987
240 Delta (3W + G)	PSPD200240D2K	10.5 x 7.5 x 3.5	7.0	$3,429	PSPD200240D2M	11.0 x 11.5 x 6.0	14.0	$4,275
480 Delta (3W + G)	PSPD200480D2K	10.5 x 7.5 x 3.5	7.0	$3,429	PSPD200480D2M	11.0 x 11.5 x 6.0	14.0	$4,275
400/230 Wye Three-phase (4W + G)	PSPD200400Y2K	10.5 x 7.5 x 3.5	7.0	$3,429	PSPD200400Y2M	11.0 x 11.5 x 6.0	14.0	$4,275
480/277 Wye Three-phase (4W + G)	PSPD200480Y2K	10.5 x 7.5 x 3.5	7.0	$3,429	PSPD200480Y2M	11.0 x 11.5 x 6.0	14.0	$4,275
Basic Diagnostics	'K' Option - No Integral Disconnect				'M' Option - Integral Disconnect			
208/120 Wye Three-phase (4W + G)	PSPD200208Y1K	10.5 x 7.5 x 3.5	7.0	$2,642	PSPD200208Y1M	11.0 x 11.5 x 6.0	14.0	$3,487
120/240 Single Split-phase (3W + G)	PSPD200240S1K	10.5 x 7.5 x 3.5	7.0	$2,909	PSPD200240S1M	11.0 x 11.5 x 6.0	14.0	$3,755
240 Delta (3W + G)	PSPD200240D1K	10.5 x 7.5 x 3.5	7.0	$3,168	PSPD200240D1M	11.0 x 11.5 x 6.0	14.0	$4,014
480 Delta (3W + G)	PSPD200480D1K	10.5 x 7.5 x 3.5	7.0	$3,168	PSPD200480D1M	11.0 x 11.5 x 6.0	14.0	$4,014
400/230 Wye Three-phase (4W + G)	PSPD200400Y1K	10.5 x 7.5 x 3.5	7.0	$3,168	PSPD200400Y1M	11.0 x 11.5 x 6.0	14.0	$4,014
480/277 Wye Three-phase (4W + G)	PSPD200480Y1K	10.5 x 7.5 x 3.5	7.0	$3,168	PSPD200480Y1M	11.0 x 11.5 x 6.0	14.0	$4,014
PSPD 250 (250 kA/phase surge rating)								
Standard with Surge Counter Diagnostics	'K' Option - No Integral Disconnect				'M' Option - Integral Disconnect			
208/120 Wye Three-phase (4W + G)	PSPD250208Y3K	10.5 x 7.5 x 6.0	11.5	$3,956	PSPD250208Y3M	11.0 x 11.5 x 6.0	16.5	$4,954
120/240 Single Split-phase (3W + G)	PSPD250240S3K	10.5 x 7.5 x 6.0	11.5	$4,323	PSPD250240S3M	11.0 x 11.5 x 6.0	16.5	$5,320
240 Delta (3W + G)	PSPD250240D3K	10.5 x 7.5 x 6.0	11.5	$4,688	PSPD250240D3M	11.0 x 11.5 x 6.0	16.5	$5,690
480 Delta (3W + G)	PSPD250480D3K	10.5 x 7.5 x 6.0	11.5	$4,688	PSPD250480D3M	11.0 x 11.5 x 6.0	16.5	$5,690
400/230 Wye Three-phase (4W + G)	PSPD250400Y3K	10.5 x 7.5 x 6.0	11.5	$4,688	PSPD250400Y3M	11.0 x 11.5 x 6.0	16.5	$5,690
480/277 Wye Three-phase (4W + G)	PSPD250480Y3K	10.5 x 7.5 x 6.0	11.5	$4,688	PSPD250480Y3M	11.0 x 11.5 x 6.0	16.5	$5,690
Standard Diagnostics	'K' Option - No Integral Disconnect				'M' Option - Integral Disconnect			
208/120 Wye Three-phase (4W + G)	PSPD250208Y2K	10.5 x 7.5 x 6.0	11.5	$3,658	PSPD250208Y2M	11.0 x 11.5 x 6.0	16.5	$4,656
120/240 Single Split-phase (3W + G)	PSPD250240S2K	10.5 x 7.5 x 6.0	11.5	$4,022	PSPD250240S2M	11.0 x 11.5 x 6.0	16.5	$5,025
240 Delta (3W + G)	PSPD250240D2K	10.5 x 7.5 x 6.0	11.5	$4,388	PSPD250240D2M	11.0 x 11.5 x 6.0	16.5	$5,390
480 Delta (3W + G)	PSPD250480D2K	10.5 x 7.5 x 6.0	11.5	$4,388	PSPD250480D2M	11.0 x 11.5 x 6.0	16.5	$5,390
400/230 Wye Three-phase (4W + G)	PSPD250400Y2K	10.5 x 7.5 x 6.0	11.5	$4,388	PSPD250400Y2M	11.0 x 11.5 x 6.0	16.5	$5,390
480/277 Wye Three-phase (4W + G)	PSPD250480Y2K	10.5 x 7.5 x 6.0	11.5	$4,388	PSPD250480Y2M	11.0 x 11.5 x 6.0	16.5	$5,390
Basic Diagnostics	'K' Option - No Integral Disconnect				'M' Option - Integral Disconnect			
208/120 Wye Three-phase (4W + G)	PSPD250208Y1K	10.5 x 7.5 x 6.0	11.5	$3,384	PSPD250208Y1M	11.0 x 11.5 x 6.0	16.5	$4,383
120/240 Single Split-phase (3W + G)	PSPD250240S1K	10.5 x 7.5 x 6.0	11.5	$3,724	PSPD250240S1M	11.0 x 11.5 x 6.0	16.5	$4,723
240 Delta (3W + G)	PSPD250240D1K	10.5 x 7.5 x 6.0	11.5	$4,064	PSPD250240D1M	11.0 x 11.5 x 6.0	16.5	$5,065
480 Delta (3W + G)	PSPD250480D1K	10.5 x 7.5 x 6.0	11.5	$4,064	PSPD250480D1M	11.0 x 11.5 x 6.0	16.5	$5,065
400/230 Wye Three-phase (4W + G)	PSPD250400Y1K	10.5 x 7.5 x 6.0	11.5	$4,064	PSPD250400Y1M	11.0 x 11.5 x 6.0	16.5	$5,065
480/277 Wye Three-phase (4W + G)	PSPD250480Y1K	10.5 x 7.5 x 6.0	11.5	$4,064	PSPD250480Y1M	11.0 x 11.5 x 6.0	16.5	$5,065
PSPD 300 (300 kA/phase surge rating)								
Standard with Surge Counter Diagnostics	'K' Option - No Integral Disconnect				'M' Option - Integral Disconnect			
208/120 Wye Three-phase (4W + G)	PSPD300208Y3K	10.5 x 7.5 x 6.0	11.5	$4,682	PSPD300208Y3M	11.0 x 11.5 x 6.0	16.5	$5,750
120/240 Single Split-phase (3W + G)	PSPD300240S3K	10.5 x 7.5 x 6.0	11.5	$5,120	PSPD300240S3M	11.0 x 11.5 x 6.0	16.5	$6,195
240 Delta (3W + G)	PSPD300240D3K	10.5 x 7.5 x 6.0	11.5	$5,560	PSPD300240D3M	11.0 x 11.5 x 6.0	16.5	$6,630
480 Delta (3W + G)	PSPD300480D3K	10.5 x 7.5 x 6.0	11.5	$5,560	PSPD300480D3M	11.0 x 11.5 x 6.0	16.5	$6,630
400/230 Wye Three-phase (4W + G)	PSPD300400Y3K	10.5 x 7.5 x 6.0	11.5	$5,560	PSPD300400Y3M	11.0 x 11.5 x 6.0	16.5	$6,630
480/277 Wye Three-phase (4W + G)	PSPD300480Y3K	10.5 x 7.5 x 6.0	11.5	$5,560	PSPD300480Y3M	11.0 x 11.5 x 6.0	16.5	$6,630

SURGE PROTECTION *(continued)*
PSPD SERIES

Description	Part Number	Dimensions (H x W x D, inches)	Weight (lb)	List Price	Part Number	Dimensions (H x W x D, inches)	Weight (lb)	List Price
PSPD 300 (300 kA/phase surge rating) (continued)								
Standard Diagnostics	'K' Option - No Integral Disconnect				'M' Option - Integral Disconnect			
208/120 Wye Three-phase (4W + G)	PSPD300208Y2K	10.5 x 7.5 x 6.0	11.5	$4,383	PSPD300208Y2M	11.0 x 11.5 x 6.0	16.5	$5,450
120/240 Single Split-phase (3W + G)	PSPD300240S2K	10.5 x 7.5 x 6.0	11.5	$4,822	PSPD300240S2M	11.0 x 11.5 x 6.0	16.5	$5,890
240 Delta (3W + G)	PSPD300240D2K	10.5 x 7.5 x 6.0	11.5	$5,265	PSPD300240D2M	11.0 x 11.5 x 6.0	16.5	$6,330
480 Delta (3W + G)	PSPD300480D2K	10.5 x 7.5 x 6.0	11.5	$5,265	PSPD300480D2M	11.0 x 11.5 x 6.0	16.5	$6,330
400/230 Wye Three-phase (4W + G)	PSPD300400Y2K	10.5 x 7.5 x 6.0	11.5	$5,265	PSPD300400Y2M	11.0 x 11.5 x 6.0	16.5	$6,330
480/277 Wye Three-phase (4W + G)	PSPD300480Y2K	10.5 x 7.5 x 6.0	11.5	$5,265	PSPD300480Y2M	11.0 x 11.5 x 6.0	16.5	$6,330
Basic Diagnostics	'K' Option - No Integral Disconnect				'M' Option - Integral Disconnect			
208/120 Wye Three-phase (4W + G)	PSPD300208Y1K	10.5 x 7.5 x 6.0	11.5	$4,055	PSPD300208Y1M	11.0 x 11.5 x 6.0	16.5	$5,120
120/240 Single Split-phase (3W + G)	PSPD300240S1K	10.5 x 7.5 x 6.0	11.5	$4,462	PSPD300240S1M	11.0 x 11.5 x 6.0	16.5	$5,530
240 Delta (3W + G)	PSPD300240D1K	10.5 x 7.5 x 6.0	11.5	$4,868	PSPD300240D1M	11.0 x 11.5 x 6.0	16.5	$5,935
480 Delta (3W + G)	PSPD300480D1K	10.5 x 7.5 x 6.0	11.5	$4,868	PSPD300480D1M	11.0 x 11.5 x 6.0	16.5	$5,935
400/230 Wye Three-phase (4W + G)	PSPD300400Y1K	10.5 x 7.5 x 6.0	11.5	$4,868	PSPD300400Y1M	11.0 x 11.5 x 6.0	16.5	$5,935
480/277 Wye Three-phase (4W + G)	PSPD300480Y1K	10.5 x 7.5 x 6.0	11.5	$4,868	PSPD300480Y1M	11.0 x 11.5 x 6.0	16.5	$5,935
PSPD 400 (400 kA/phase surge rating)								
Standard with Surge Counter Diagnostics	'K' Option - No Integral Disconnect				'M' Option - Integral Disconnect			
208/120 Wye Three-phase (4W + G)	PSPD400208Y3K	10.5 x 7.5 x 6.0	11.5	$6,150	PSPD400208Y3M	11.0 x 11.5 x 6.0	16.5	$7,290
120/240 Single Split-phase (3W + G)	PSPD400240S3K	10.5 x 7.5 x 6.0	11.5	$6,740	PSPD400240S3M	11.0 x 11.5 x 6.0	16.5	$7,875
240 Delta (3W + G)	PSPD400240D3K	10.5 x 7.5 x 6.0	11.5	$7,325	PSPD400240D3M	11.0 x 11.5 x 6.0	16.5	$8,460
480 Delta (3W + G)	PSPD400480D3K	10.5 x 7.5 x 6.0	11.5	$7,325	PSPD400480D3M	11.0 x 11.5 x 6.0	16.5	$8,460
400/230 Wye Three-phase (4W + G)	PSPD400400Y3K	10.5 x 7.5 x 6.0	11.5	$7,325	PSPD400400Y3M	11.0 x 11.5 x 6.0	16.5	$8,460
480/277 Wye Three-phase (4W + G)	PSPD400480Y3K	10.5 x 7.5 x 6.0	11.5	$7,325	PSPD400480Y3M	11.0 x 11.5 x 6.0	16.5	$8,460
Standard Diagnostics	'K' Option - No Integral Disconnect				'M' Option - Integral Disconnect			
208/120 Wye Three-phase (4W + G)	PSPD400208Y2K	10.5 x 7.5 x 6.0	11.5	$5,850	PSPD400208Y2M	11.0 x 11.5 x 6.0	16.5	$6,990
120/240 Single Split-phase (3W + G)	PSPD400240S2K	10.5 x 7.5 x 6.0	11.5	$6,440	PSPD400240S2M	11.0 x 11.5 x 6.0	16.5	$7,570
240 Delta (3W + G)	PSPD400240D2K	10.5 x 7.5 x 6.0	11.5	$7,030	PSPD400240D2M	11.0 x 11.5 x 6.0	16.5	$8,160
480 Delta (3W + G)	PSPD400480D2K	10.5 x 7.5 x 6.0	11.5	$7,030	PSPD400480D2M	11.0 x 11.5 x 6.0	16.5	$8,160
400/230 Wye Three-phase (4W + G)	PSPD400400Y2K	10.5 x 7.5 x 6.0	11.5	$7,030	PSPD400400Y2M	11.0 x 11.5 x 6.0	16.5	$8,160
480/277 Wye Three-phase (4W + G)	PSPD400480Y2K	10.5 x 7.5 x 6.0	11.5	$7,030	PSPD400480Y2M	11.0 x 11.5 x 6.0	16.5	$8,160
Basic Diagnostics	'K' Option - No Integral Disconnect				'M' Option - Integral Disconnect			
208/120 Wye Three-phase (4W + G)	PSPD400208Y1K	10.5 x 7.5 x 6.0	11.5	$5,410	PSPD400208Y1M	11.0 x 11.5 x 6.0	16.5	$6,550
120/240 Single Split-phase (3W + G)	PSPD400240S1K	10.5 x 7.5 x 6.0	11.5	$5,950	PSPD400240S1M	11.0 x 11.5 x 6.0	16.5	$7,085
240 Delta (3W + G)	PSPD400240D1K	10.5 x 7.5 x 6.0	11.5	$6,500	PSPD400240D1M	11.0 x 11.5 x 6.0	16.5	$7,635
480 Delta (3W + G)	PSPD400480D1K	10.5 x 7.5 x 6.0	11.5	$6,500	PSPD400480D1M	11.0 x 11.5 x 6.0	16.5	$7,635
400/230 Wye Three-phase (4W + G)	PSPD400400Y1K	10.5 x 7.5 x 6.0	11.5	$6,500	PSPD400400Y1M	11.0 x 11.5 x 6.0	16.5	$7,635
480/277 Wye Three-phase (4W + G)	PSPD400480Y1K	10.5 x 7.5 x 6.0	11.5	$6,500	PSPD400480Y1M	11.0 x 11.5 x 6.0	16.5	$7,635

SURGE PROTECTION
PSPV SERIES



Eaton's PSPV series is a commercial grade and light industrial surge protection device that combines surge suppression components and EMI/RFI filtering to provide effective protection for sensitive electronic loads. Use of the PSPV can prevent costly downtime and equipment damage from surges (or transients) caused by lightning, utility grid switching, switching of external/internal inductive or capacitive loads and other sources.

- Surge Plane technology ensures reliability and performance by using a low impedance copper platform.
- Compact design enables close mounting to electrical distribution equipment.
- Status indicator lights let you easily monitor supply power, surge suppression component status, and fusing.
- Choose from 6 surge current ratings to meet a variety of application needs.
- UL 1449 3rd Edition certification.

Description	Voltage Rating	Part Number	Dimensions (H x W x D, inches)	Enclosure	Weight (lb)	List Price
PSPV 050 (50 kA/phase surge rating)	120/240 Split Phase (3W+G)	PSPV050240S2K	5.1 x 11.6 x 2.7	NEMA 1	5.0	$726
PSPV 050 (50 kA/phase surge rating)	240 Delta (3W+G)	PSPV050240D2K	5.1 x 11.6 x 2.7	NEMA 1	5.0	$726
PSPV 050 (50 kA/phase surge rating)	120/208 Wye (4W+G)	PSPV050208Y2K	5.1 x 11.6 x 2.7	NEMA 1	5.0	$726
PSPV 050 (50 kA/phase surge rating)	400 Delta (3W+G)	PSPV050480D2K	5.1 x 11.6 x 2.7	NEMA 1	5.0	$726
PSPV 050 (50 kA/phase surge rating)	277/480 Wye (4W+G)	PSPV050480Y2K	5.1 x 11.6 x 2.7	NEMA 1	5.0	$726
PSPV 050 (50 kA/phase surge rating)	400 Delta (3W+G)	PSPV050400D2K	5.1 x 11.6 x 2.7	NEMA 1	5.0	$726
PSPV 050 (50 kA/phase surge rating)	230/400 Wye (4W+G)	PSPV050400Y2K	5.1 x 11.6 x 2.7	NEMA 1	5.0	$726
PSPV 080 (80 kA/phase surge rating)	120/240 Split Phase (3W+G)	PSPV080240S2K	5.1 x 11.6 x 2.7	NEMA 1	5.5	$816
PSPV 080 (80 kA/phase surge rating)	240 Delta (3W+G)	PSPV080240D2K	5.1 x 11.6 x 2.7	NEMA 1	5.5	$1,103
PSPV 080 (80 kA/phase surge rating)	120/208 Wye (4W+G)	PSPV080208Y2K	5.1 x 11.6 x 2.7	NEMA 1	5.5	$1,103
PSPV 080 (80 kA/phase surge rating)	400 Delta (3W+G)	PSPV080480D2K	5.1 x 11.6 x 2.7	NEMA 1	5.5	$1,103
PSPV 080 (80 kA/phase surge rating)	277/480 Wye (4W+G)	PSPV080480Y2K	5.1 x 11.6 x 2.7	NEMA 1	5.5	$1,103
PSPV 080 (80 kA/phase surge rating)	400 Delta (3W+G)	PSPV080400D2K	5.1 x 11.6 x 2.7	NEMA 1	5.5	$1,103
PSPV 080 (80 kA/phase surge rating)	230/400 Wye (4W+G)	PSPV080400Y2K	5.1 x 11.6 x 2.7	NEMA 1	5.5	$1,103
PSPV 100 (100 kA/phase surge rating)	120/240 Split Phase (3W+G)	PSPV100240S2K	5.1 x 11.6 x 2.7	NEMA 1	6.0	$969
PSPV 100 (100 kA/phase surge rating)	240 Delta (3W+G)	PSPV100240D2K	5.1 x 11.6 x 2.7	NEMA 1	6.0	$1,320
PSPV 100 (100 kA/phase surge rating)	120/208 Wye (4W+G)	PSPV100208Y2K	5.1 x 11.6 x 2.7	NEMA 1	6.0	$1,320
PSPV 100 (100 kA/phase surge rating)	400 Delta (3W+G)	PSPV100480D2K	5.1 x 11.6 x 2.7	NEMA 1	6.0	$1,320
PSPV 100 (100 kA/phase surge rating)	277/480 Wye (4W+G)	PSPV100480Y2K	5.1 x 11.6 x 2.7	NEMA 1	6.0	$1,320
PSPV 100 (100 kA/phase surge rating)	400 Delta (3W+G)	PSPV100400D2K	5.1 x 11.6 x 2.7	NEMA 1	6.0	$1,320
PSPV 100 (100 kA/phase surge rating)	230/400 Wye (4W+G)	PSPV100400Y2K	5.1 x 11.6 x 2.7	NEMA 1	6.0	$1,320
PSPV 120 (120 kA/phase surge rating)	120/240 Split Phase (3W+G)	PSPV120240S2K	5.1 x 11.6 x 2.7	NEMA 1	6.0	$1,140
PSPV 120 (120 kA/phase surge rating)	240 Delta (3W+G)	PSPV120240D2K	5.1 x 11.6 x 2.7	NEMA 1	6.0	$1,484
PSPV 120 (120 kA/phase surge rating)	120/208 Wye (4W+G)	PSPV120208Y2K	5.1 x 11.6 x 2.7	NEMA 1	6.0	$1,484
PSPV 120 (120 kA/phase surge rating)	400 Delta (3W+G)	PSPV120480D2K	5.1 x 11.6 x 2.7	NEMA 1	6.0	$1,484
PSPV 120 (120 kA/phase surge rating)	277/480 Wye (4W+G)	PSPV120480Y2K	5.1 x 11.6 x 2.7	NEMA 1	6.0	$1,484
PSPV 120 (120 kA/phase surge rating)	400 Delta (3W+G)	PSPV120400D2K	5.1 x 11.6 x 2.7	NEMA 1	6.0	$1,484
PSPV 120 (120 kA/phase surge rating)	230/400 Wye (4W+G)	PSPV120400Y2K	5.1 x 11.6 x 2.7	NEMA 1	6.0	$1,484
PSPV 160 (160 kA/phase surge rating)	120/240 Split Phase (3W+G)	PSPV160240S2K	5.1 x 11.6 x 2.7	NEMA 1	6.5	$1,490
PSPV 160 (160 kA/phase surge rating)	240 Delta (3W+G)	PSPV160240D2K	5.1 x 11.6 x 2.7	NEMA 1	6.5	$1,919
PSPV 160 (160 kA/phase surge rating)	120/208 Wye (4W+G)	PSPV160208Y2K	5.1 x 11.6 x 2.7	NEMA 1	6.5	$1,919
PSPV 160 (160 kA/phase surge rating)	400 Delta (3W+G)	PSPV160480D2K	5.1 x 11.6 x 2.7	NEMA 1	6.5	$1,919
PSPV 160 (160 kA/phase surge rating)	277/480 Wye (4W+G)	PSPV160480Y2K	5.1 x 11.6 x 2.7	NEMA 1	6.5	$1,919
PSPV 160 (160 kA/phase surge rating)	400 Delta (3W+G)	PSPV160400D2K	5.1 x 11.6 x 2.7	NEMA 1	6.5	$1,919
PSPV 160 (160 kA/phase surge rating)	230/400 Wye (4W+G)	PSPV160400Y2K	5.1 x 11.6 x 2.7	NEMA 1	6.5	$1,919
PSPV 200 (200 kA/phase surge rating)	120/240 Split Phase (3W+G)	PSPV200240S2K	5.1 x 11.6 x 2.7	NEMA 1	7.0	$1,919
PSPV 200 (200 kA/phase surge rating)	240 Delta (3W+G)	PSPV200240D2K	5.1 x 11.6 x 2.7	NEMA 1	7.0	$2,384
PSPV 200 (200 kA/phase surge rating)	120/208 Wye (4W+G)	PSPV200208Y2K	5.1 x 11.6 x 2.7	NEMA 1	7.0	$2,384
PSPV 200 (200 kA/phase surge rating)	400 Delta (3W+G)	PSPV200480D2K	5.1 x 11.6 x 2.7	NEMA 1	7.0	$2,384
PSPV 200 (200 kA/phase surge rating)	277/480 Wye (4W+G)	PSPV200480Y2K	5.1 x 11.6 x 2.7	NEMA 1	7.0	$2,384
PSPV 200 (200 kA/phase surge rating)	400 Delta (3W+G)	PSPV200400D2K	5.1 x 11.6 x 2.7	NEMA 1	7.0	$2,384
PSPV 200 (200 kA/phase surge rating)	230/400 Wye (4W+G)	PSPV200400Y2K	5.1 x 11.6 x 2.7	NEMA 1	7.0	$2,384

SURGE PROTECTION
Surge Protection Devices (SPD)

SPD Type 1 CHSP Service Entrance Surge Protection — UL 1449 3rd Ed. Listed

- Commercial grade AC power protection
- Type 1 surge device for installation before or after the main service disconnect
- Convenient mounting options—universal fit to any manufacturer's equipment
- Clear, visible LED indication displaying status of the surge protector



SPD TYPE 1 CHSP

Catalog Number	Enclosure	Voltage	Phase	Frequency (Hz)	MCOV[1]	VPR[2]	I_n[3]	SCCR[4]	Surge Current Capacity, Per Phase Rating[5]	List Price
CHSPT1ULTRA	NEMA 4	100/200, 110/220, 120/240	Single	50/60	L-L 300, L-N 150	L-L 1000, L-N 600	20 kA	200 kA	50 kA	$1,384
CHSPT1MAX	NEMA 4	100/200, 110/220, 120/240	Single	50/60	L-L 300, L-N 150	L-L 1000, L-N 600	20 kA	200 kA	45 kA	$1,046
CHSPT1MICRO	NEMA 4	100/200, 110/220, 120/240	Single	50/60	L-L 300, L-N 150	L-L 1000, L-N 600	20 kA	200 kA	36 kA	$706
CHSPT1-208Y	NEMA 4	120/208	Three-phase wye	50/60	L-L 300, L-N 150	L-L 1000, L-N 600	20 kA	200 kA	50 kA	$1,384

Notes:
1. MCOV: Maximum Continuous Operating Voltage that may be applied to the device per mode. 2. VPR: Voltage Protection Rating is the measured limiting voltage after a surge event.
3. I_n: Nominal Discharge Current is the current that the device can withstand for 15 impulses. 4. SCCR: The amount of current the product can withstand under short-circuit conditions
5. Surge Current Capacity: The maximum one time surge current rating per phase

For warranty details, go to www.eaton.com/surgetrap

SPD Type 2 CHSP Service Entrance Surge Protection — UL 1449 3rd Ed.; cUL

- AC power protection
- Universally connects to any manufacturer's loadcenter (breaker box)
- Quick connect design—easy to mount telephone and cable protection modules
- LED status indication
- This product should be connected on the load side of the loadcenter main service disconnect through a dedicated circuit breaker (follow NEC Guidelines)



SPD TYPE 2 CHSP

Catalog Number	Enclosure	Voltage	Phase	Frequency (Hz)	MCOV[1]	VPR[2]	I_n[3]	SCCR[4]	Surge Current Capacity, Per Phase Rating[5]	List Price
CHSPT2ULTRA	NEMA 4	120/240 Vac rated line voltage	Single	60	150V L-N, 300V L-L	600V L-N, 1000V L-L, 800V N-G, 600V L-G	20 kA	22 kA	108 kA (L1-N 54 kA, L1-G 54 kA, L2-N 54 kA, L2-G 54 kA)	$1,051
CHSPT2MAX	NEMA 4	120/240 Vac rated line voltage	Single	60	150V L-N, 300V L-L	600V L-N, 1000V L-L, 800V N-G, 600V L-G	10 kA	22 kA	72 kA (L1-N 36 kA, L1-G 36 kA, L2-N 36 kA, L2-G 36 kA)	$559
CHSPT2MICRO	NEMA 4	120/240 Vac rated line voltage	Single	60	150V L-N, 300V L-L	600V L-N, 1000V L-L, 800V N-G, 600V L-G	5 kA	22 kA	36 kA (L1-N 18 kA, L1-G 18 kA, L2-N 18 kA, L2-G 18 kA)	$350

Notes:
1. MCOV: Maximum Continuous Operating Voltage that may be applied to the device per mode. 2. VPR: Voltage Protection Rating is the measured limiting voltage after a surge event.
3. I_n: Nominal Discharge Current is the current that the device can withstand for 15 impulses. 4. SCCR: The amount of current the product can withstand under short-circuit conditions
5. Surge Current Capacity: The maximum one time surge current rating per phase.

For warranty details, go to www.eaton.com/surgetrap

SURGE PROTECTION *(continued)*
Surge Protection Devices (SPD)

Accessories for CHSP Type 2 Service Entrance Protection

CHSP TYPE 2

Catalog Number	Description	Installation	Surge Current Capacity	DC Breakdown Voltage	Voltage	List Price
CHSPCABLE	Quick Connect design—add additional telephone and AC protection modules; protects two quad shield cables	Indoor installation; or rain-tight when used with recommended Enclosure	10 kA per line	145V	–	$315
CHSPTELE	Quick Connect design—add additional AC and cable protection modules; protects four telephone lines, bi-directional	Indoor installation; or rain-tight when used with recommended Enclosure	20 kA per line	230V	Ring 90–120 Vac/ Tone 48–52 Vdc	$336
CHSPT23PACK	3-Pack: CHSPT2ULTRA+CHSPTELE+CHSPCABLE; Surge protection for AC power, telephone and cable—see individual product features	–	See individual product ratings	–	–	$1,118

SERVICES

Single-phase Service Plans Overview

SUMMARY OF EATON SERVICE PLANS FOR SINGLE-PHASE MODELS

Single-phase Service Plan Features	Factory Warranty	Extended Warranty-Depot	2 Year Onsite Warranty Upgrade	Flex (onsite)
Comprehensive coverage of the UPS and standard batteries	•	•	•	•
Telephone technical support	•	•	•	•
eNotify remote monitoring			o	o
Connectivity support	•	•	•	•
Expedited delivery of replacement parts, modules and batteries		•	•	•
Onsite startup		o	o	o
Onsite corrective maintenance			•	•
7x24 Next-day response			•	•
UPS preventive maintenance		o	o	o
8-hour response			o	o

• Included feature o Optional feature

1. Unit must be within 100 miles of Eaton established service location to qualify for next day response. Refer to Eaton PQ 1 Phase Service 3-digit Zip Code 8-Hour Response Map (if zip code is shown 8-hour may be purchased).
2. eNotify Remote Monitoring service requires compatible connectivity card and EMP, not included in Flex or Extended Warranty contract price. eNotify is not available for 3105, 5110, 5115 and FERRUPS.
3. Factory Warranty: Two-year Warranty for 3105, 3S, 5110, 5115, 5125, 5130, 5P, 5PX, 9130, 9135, 9PX, Evolution, Evolution S, EX, MX, EX RT, 9140, 9155, 9170+ and FERRUPS. Eaton 3105, 3S, 5110, 5115, 5125, 5130 and 5PX upgrade to 3-Year Warranty when registered online at www.eaton.com/pq/register.

EATON PQ SINGLE-PHASE SERVICE RESPONSE TIME TOOL

Eaton offers world-class service for Eaton UPS products. Our factory-certified and trained service technicians deliver 7x24 support including on-site corrective and preventive maintenance.

http://powerquality.eaton.com/Products-services/services/responsetime/default.asp

SELECTING A SERVICE PLAN

Eaton single-phase UPSs come with warranty coverage that typically includes parts and labor for electronics, 7x24 Customer Reliability Center triage and 7x24 technical support access. But to extend the term of the base factory warranty and expedite service delivery, you should recommend a service plan. The best service plans are essentially offered in two categories:

1. Extended Warranty (recommended for UPSs below 5 kVA - return to factory for exchange)
When your customer notifies Eaton about a defective unit, Eaton ships a replacement unit overnight. Upon receipt of the new UPS, the customer returns the defective unit to Eaton via ground shipment. The freight for both units is paid by Eaton.

2. Onsite service and repair (recommended for UPSs 5 kVA and above - upgrade 2 year factory warranty for 7x24 next day or 8-hour response for up to 5 years of onsite coverage)
Onsite service is a standard 7x24, next day or 8-hour (based on availability) response level of coverage – for detailed information, visit www.eaton.com/upsservices. The following features can be added to onsite service to guarantee unparalleled UPS performance:

- Comprehensive coverage of the UPS and batteries; if external (EBM) batteries exist coverage for EBM's must be purchased
- Telephone technical support
- eNotify remote monitoring
- Connectivity support
- Expedited delivery of replacement parts, modules and batteries
- Onsite startup
- Onsite corrective maintenance
- Next-day 24-hour or 8-hour response
- Annual UPS and/or battery preventive maintenance

SERVICES
Single-phase Service Plans

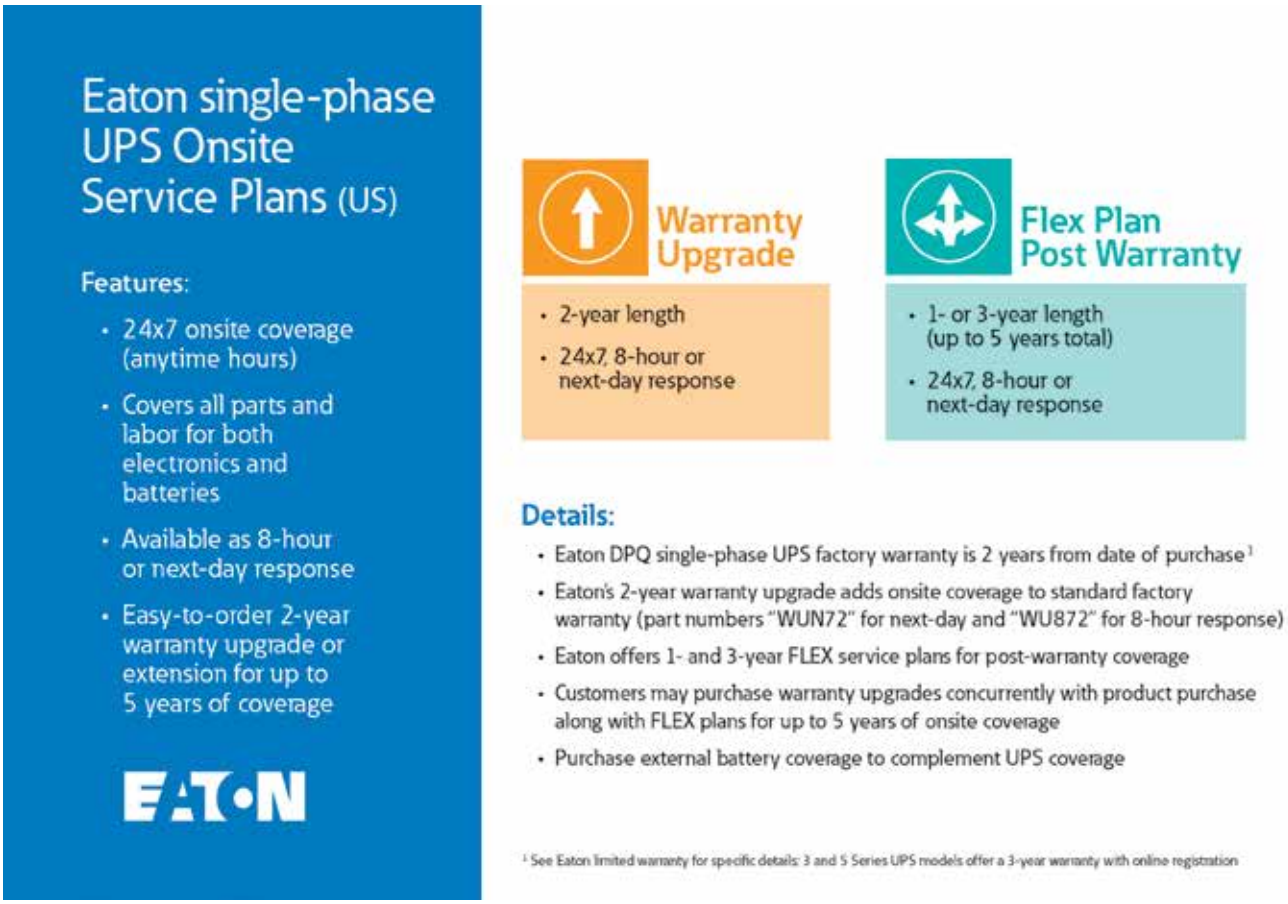

EXTENDED WARRANTY - DEPOT EXCHANGE (CONCURRENT)

Style Number	Description	Range	Applicable UPS Models	List Price
3 & 5 Series 5-Year UPS Extended Warranties				
3SW5Y-0750UC	Ext Warranty-5YR UPS Adv Exchg, New Product	1 - 700	3S	$23
5SW5Y-0950UC	Ext Warranty-5YR UPS Adv Exchg, New Product	1 - 950	5S, 5SC, 5110, 5115, 5P, 5PX, Evolution	$63
5SW5Y-1400UC	Ext Warranty-5YR UPS Adv Exchg, New Product	951 - 1400	5S, 5SC, 5110, 5115, 5P, 5PX, Evolution	$130
5SW5Y-1750UC	Ext Warranty-5YR UPS Adv Exchg, New Product	1401 - 1750	5S, 5SC, 5110, 5115, 5P, 5PX, Evolution	$169
5SW5Y-2500UC	Ext Warranty-5YR UPS Adv Exchg, New Product	1751 - 2500	5110, 5115, 5P, 5PX, Evolution	$352
5SW5Y-3000UC	Ext Warranty-5YR UPS Adv Exchg, New Product	2501 - 3000	5110, 5115, 5P, 5PX, Evolution	$405
3 & 5 Series 5-Year EBM Extended Warranties				
5SW5Y-1750BC	Ext Warranty-5YR EBM Adv Exchg, New Product	1 - 1750	5PX, Evolution	$412
5SW5Y-3000BC	Ext Warranty-5YR EBM Adv Exchg, New Product	1751 - 3000	5PX, Evolution	$645
9 Series 3-Year & 5-Year UPS Extended Warranties				
9SW3Y-0700UC	Ext Warranty-3YR UPS Adv Exchg, New Product	1 - 700	9PX, 9130, FERRUPS non hard-wired, 9170+, EX	$117
9SW3Y-1000UC	Ext Warranty-3YR UPS Adv Exchg, New Product	701 - 1000	9PX, 9130, FERRUPS non hard-wired, 9170+, EX	$151
9SW3Y-1500UC	Ext Warranty-3YR UPS Adv Exchg, New Product	1001 - 1500	9PX, 9130, FERRUPS non hard-wired, 9170+, EX	$193
9SW3Y-2200UC	Ext Warranty-3YR UPS Adv Exchg, New Product	1501 - 2000	9PX, 9130, FERRUPS non hard-wired, 9170+, EX	$257
9SW3Y-2500UC	Ext Warranty-3YR UPS Adv Exchg, New Product	2001 - 2500	9PX, 9130, FERRUPS non hard-wired, 9170+, EX	$341
9SW3Y-3000UC	Ext Warranty-3YR UPS Adv Exchg, New Product	2501 - 3000	9PX, 9130, FERRUPS non hard-wired, 9170+, EX	$429
9SW3Y-6000UC	Ext Warranty-3YR UPS Adv Exchg, New Product	3001 - 6000	9PX, 9130, FERRUPS non hard-wired, 9170+, EX	$658
9SW3Y-11000UC	Ext Warranty-3YR UPS Adv Exchg, New Product	6001 - 11000	9PX, 9130, FERRUPS non hard-wired, 9170+, EX	$885
9SW3Y-18000UC	Ext Warranty-3YR UPS Adv Exchg, New Product	11001-18000	9PX, 9130, FERRUPS non hard-wired, 9170+, EX	$1,265
9SW5Y-0700UC	Ext Warranty-5YR UPS Adv Exchg, New Product	1 - 700	9PX, 9130, FERRUPS non hard-wired, 9170+, EX	$282
9SW5Y-1000UC	Ext Warranty-5YR UPS Adv Exchg, New Product	701 - 1000	9PX, 9130, FERRUPS non hard-wired, 9170+, EX	$362

SERVICES

Single-phase Service Plans *(continued)*

EXTENDED WARRANTY - DEPOT EXCHANGE (CONCURRENT) *(continued)*

Style Number	Description	Range	Applicable UPS Models	List Price
9 Series 3-Year & 5-Year UPS Extended Warranties				
9SW5Y-1500UC	Ext Warranty-5YR UPS Adv Exchg, New Product	1001 - 1500	9PX, 9130, FERRUPS non hard-wired, 9170+, EX	$463
9SW5Y-2200UC	Ext Warranty-5YR UPS Adv Exchg, New Product	1501 - 2000	9PX, 9130, FERRUPS non hard-wired, 9170+, EX	$617
9SW5Y-2500UC	Ext Warranty-5YR UPS Adv Exchg, New Product	2001 - 2500	9PX, 9130, FERRUPS non hard-wired, 9170+, EX	$819
9SW5Y-3000UC	Ext Warranty-5YR UPS Adv Exchg, New Product	2501 - 3000	9PX, 9130, FERRUPS non hard-wired, 9170+, EX	$1,033
9SW5Y-6000UC	Ext Warranty-5YR UPS Adv Exchg, New Product	3001 - 6000	9PX, 9130, FERRUPS non hard-wired, 9170+, EX	$1,580
9SW5Y-11000UC	Ext Warranty-5YR UPS Adv Exchg, New Product	6001 - 11000	9PX, 9130, FERRUPS non hard-wired, 9170+, EX	$2,130
9SW5Y-18000UC	Ext Warranty-5YR UPS Adv Exchg, New Product	11001-18000	9PX, 9130, FERRUPS non hard-wired, 9170+, EX	$2,703
9 Series 3-Year & 5-Year EBM Extended Warranties				
9SW3Y-3000BC	Ext Warranty-3YR EBM Adv Exchg, New Product	1 - 3000	9PX, 9130, FERRUPS non hard-wired, 9170+, EX	$208
9SW3Y-18000BC	Ext Warranty-3YR EBM Adv Exchg, New Product	3001-18000	9PX, 9130, FERRUPS non hard-wired, 9170+, EX	$417
9SW5Y-3000BC	Ext Warranty-5YR EBM Adv Exchg, New Product	1 - 3000	9PX, 9130, FERRUPS non hard-wired, 9170+, EX	$521
9SW5Y-18000BC	Ext Warranty-5YR EBM Adv Exchg, New Product	3001-18000	9PX, 9130, FERRUPS non hard-wired, 9170+, EX	$1,042
ePDU 5-Year Extended Warranties				
ESW5Y-0001-0400S	ePDU Build To Order, Specialty, 5-Year-Total Warranty (ePDU)	$0 to $400	All ePDU BtO, Specialty products based on list price	$81
ESW5Y-0401-1000S	ePDU Build To Order, Specialty, 5-Year-Total Warranty (ePDU)	$401 to $1000	All ePDU BtO, Specialty products based on list price	$201
ESW5Y-1001-2000S	ePDU Build To Order, Specialty, 5-Year-Total Warranty (ePDU)	$1001 to $2000	All ePDU BtO, Specialty products based on list price	$402
ESW5Y-2001-5000S	ePDU Build To Order, Specialty, 5-Year-Total Warranty (ePDU)	$2001 to $5000	All ePDU BtO, Specialty products based on list price	$1,004
ESW5Y-0001-0400C	ePDU Custom, 5-Year-Total Warranty (ePDU)	$0 to $400	All ePDU Custom products based on list price	$81
ESW5Y-0401-1000C	ePDU Custom, 5-Year-Total Warranty (ePDU)	$401 to $1000	All ePDU Custom products based on list price	$201
ESW5Y-1001-2000C	ePDU Custom, 5-Year-Total Warranty (ePDU)	$1001 to $2000	All ePDU Custom products based on list price	$402
ESW5Y-2001-5000C	ePDU Custom, 5-Year-Total Warranty (ePDU)	$2001 to $5000	All ePDU Custom products based on list price	$1,004
ESW5Y-0001-0400P	ePDU Top Sellers, 5-Year-Total Warranty (ePDU)	$0 to $400	All ePDU Top Seller products based on list price	$64
ESW5Y-0401-1000P	ePDU Top Sellers, 5-Year-Total Warranty (ePDU)	$401 to $1000	All ePDU Top Seller products based on list price	$161
ESW5Y-1001-2000P	ePDU Top Sellers, 5-Year-Total Warranty (ePDU)	$1001 to $2000	All ePDU Top Seller products based on list price	$321
ESW5Y-2001-5000P	ePDU Top Sellers, 5-Year-Total Warranty (ePDU)	$2001 to $5000	All ePDU Top Seller products based on list price	$804

SCHEDULED SERVICES & ONSITE SERVICE PLANS (CONCURRENT)

UPS & EBM Next Day Warranty Upgrade to Onsite Service Plan (Years 1-2)				
WUN72XXX-2509UC	2YR Onsite Upgrd To Factory Warr 7x24 Next Day Resp 1-2500VA	1-2500	5PX, Evolution	$568
WUN72XXX-6009UC	2YR Onsite Upgrd To Factory Warr 7x24 Next Day Resp 2.5-6kVA	2501-6000	5PX, Evolution, 9PX, 9130, FERRUPS, 9170+, EX	$894
WUN72XXX-11000UC	2YR Onsite Upgrd To Factory Warr 7x24 Next Day Resp 6-11kVA	6001-11000	9PX, 9130, FERRUPS, 9170+, EX	$1,169
WUN72XXX-18000UC	2YR Onsite Upgrd To Factory Warr 7x24 Next Day Resp 11-18kVA	11001-18000	9PX, 9130, FERRUPS, 9170+, EX	$1,387
WUN72XXX-7000BC	2YR Onsite Upgrd To Factory Warr 7x24 Next Day Resp 1-7000VA	1-7000	EBM's for 9PX, 9130, FERRUPS, 9170+ 3-6 Slot, EX	$352
WUN72XXX-11000BC	2YR Onsite Upgrd To Factory Warr 7x24 Next Day Resp 7-11kVA	7001-11000	EBM's for 9PX, 9130, FERRUPS, 9170+ 9 Slot, EX	$450
WUN72XXX-18000BC	2YR Onsite Upgrd To Factory Warr 7x24 Next Day Resp 11-18kVA	11001-18000	EBM's for 9PX, 9130, FERRUPS, 9170+ 12 Slot, EX	$542
UPS & EBM 8-Hour Warranty Upgrade to Onsite Service Plan (Years 1-2)				
WU872XXX-2509UC	2YR Onsite Upgrd To Factory Warr 7x24 8hr Resp 1-2500VA	1-2500	5PX, Evolution	$710
WU872XXX-6009UC	2YR Onsite Upgrd To Factory Warr 7x24 8hr Resp 2.5-6kVA	2501-6000	5PX, Evolution, 9PX, 9130, FERRUPS, 9170+, EX	$1,117
WU872XXX-11000UC	2YR Onsite Upgrd To Factory Warr 7x24 8hr Resp 6-11kVA	6001-11000	9PX, 9130, FERRUPS, 9170+, EX	$1,462
WU872XXX-18000UC	2YR Onsite Upgrd To Factory Warr 7x24 8hr Resp 11-18kVA	11001-18000	9PX, 9130, FERRUPS, 9170+, EX	$1,734
WU872XXX-7000BC	2YR Onsite Upgrd To Factory Warr 7x24 8hr Resp 1-7000VA	1-7000	EBM's for 9PX, 9130, FERRUPS, 9170+ 3-6 Slot, EX	$440
WU872XXX-11000BC	2YR Onsite Upgrd To Factory Warr 7x24 8hr Resp 7-11kVA	7001-11000	EBM's for 9PX, 9130, FERRUPS, 9170+ 9 Slot, EX	$562
WU872XXX-18000BC	2YR Onsite Upgrd To Factory Warr 7x24 8hr Resp 11-18kVA	11001-18000	EBM's for 9PX, 9130, FERRUPS, 9170+ 12 Slot, EX	$677
UPS & EBM Next Day Onsite Service Plans Post Warranty (Years 3-5)				
FLN71XXX-2509UC	1YR Flex UPS Onsite Service, 7x24 Next Day Response 2500VA	1-2500	5PX, Evolution	$455
FLN73XXX-2509UC	3YR Flex UPS Onsite Service, 7x24 Next Day Response 2500VA	1-2500	5PX, Evolution	$1,001
FLN71XXX-6009UC	1YR Flex UPS Onsite Service, 7x24 Next Day Response 2.5-6kVA	2501-6000	5PX, Evolution, 9PX, 9130, FERRUPS, 9170+, EX	$715
FLN73XXX-6009UC	3YR Flex UPS Onsite Service, 7x24 Next Day Response 2.5-6kVA	2501-6000	5PX, Evolution, 9PX, 9130, FERRUPS, 9170+, EX	$1,573
FLN71XXX-11000UC	1YR Flex UPS Onsite Service, 7x24 Next Day Response 6-11kVA	6001-11000	9PX, 9130, FERRUPS, 9170+, EX	$935
FLN73XXX-11000UC	3YR Flex UPS Onsite Service, 7x24 Next Day Response 6-11kVA	6001-11000	9PX, 9130, FERRUPS, 9170+, EX	$2,057
FLN71XXX-18000UC	1YR Flex UPS Onsite Service, 7x24 Next Day Response 11-18kVA	11001-18000	9PX, 9130, FERRUPS, 9170+, EX	$1,110

SERVICES

Single-phase Service Plans *(continued)*

SCHEDULED SERVICES & ONSITE SERVICE PLANS (CONCURRENT) *(continued)*

UPS & EBM Next Day Onsite Service Plans Post Warranty (Years 3-5) (continued)

FLN73XXX-18000UC	3YR Flex UPS Onsite Service, 7x24 Next Day Response 11-18kVA	11001-18000	9PX, 9130, FERRUPS, 9170+, EX	$2,442
EBN71XXX-7000BC	1YR Flex EBM Onsite Service, 7x24 Next Day Response 1-7000VA	1-7000	EBM's for 9PX, 9130, FERRUPS, 9170+ 3-6 Slot, EX	$282
EBN73XXX-7000BC	3YR Flex EBM Onsite Service, 7x24 Next Day Response 1-7000VA	1-7000	EBM's for 9PX, 9130, FERRUPS, 9170+ 3-6 Slot, EX	$704
EBN71XXX-11000BC	1YR Flex EBM Onsite Service, 7x24 Next Day Response 7-11kVA	7001-11000	EBM's for 9PX, 9130, FERRUPS, 9170+ 9 Slot, EX	$495
EBN73XXX-11000BC	3YR Flex EBM Onsite Service, 7x24 Next Day Response 7-11kVA	7001-11000	EBM's for 9PX, 9130, FERRUPS, 9170+ 9 Slot, EX	$1,385
EBN71XXX-18000BC	1YR Flex EBM Onsite Service, 7x24 Next Day Response 11-18kVA	11001-18000	EBM's for 9PX, 9130, FERRUPS, 9170+ 12 Slot, EX	$1,625

UPS & EBM 8-Hour Onsite Service Plans Post Warranty (Years 3-5)

FL871XXX-2509UC	1YR Flex UPS Onsite Service, 7x24 8hr Response 2500VA	1-2500	5PX, Evolution	$569
FL873XXX-2509UC	3YR Flex UPS Onsite Service, 7x24 8hr Response 2500VA	1-2500	5PX, Evolution	$1,251
FL871XXX-6009UC	1YR Flex UPS Onsite Service, 7x24 8hr Response 2.5-6kVA	2501-6000	5PX, Evolution, 9PX, 9130, FERRUPS, 9170+, EX	$894
FL873XXX-6009UC	3YR Flex UPS Onsite Service, 7x24 8hr Response 2.5-6kVA	2501-6000	5PX, Evolution, 9PX, 9130, FERRUPS, 9170+, EX	$1,967
FL871XXX-11000UC	1YR Flex UPS Onsite Service, 7x24 8hr Response 6-11kVA	6001-11000	9PX, 9130, FERRUPS, 9170+, EX	$1,169
FL873XXX-11000UC	3YR Flex UPS Onsite Service, 7x24 8hr Response 6-11kVA	6001-11000	9PX, 9130, FERRUPS, 9170+, EX	$2,571
FL871XXX-18000UC	1YR Flex UPS Onsite Service, 7x24 8hr Response 11-18kVA	11001-18000	9PX, 9130, FERRUPS, 9170+, EX	$1,387
FL873XXX-18000UC	3YR Flex UPS Onsite Service, 7x24 8hr Response 11-18kVA	11001-18000	9PX, 9130, FERRUPS, 9170+, EX	$3,053
EB871XXX-7000BC	1YR Flex EBM Onsite Service, 7x24 8hr Response 1-7000VA	1-7000	EBM's for 9PX, 9130, FERRUPS, 9170+ 3-6 Slot, EX	$352
EB873XXX-7000BC	3YR Flex EBM Onsite Service, 7x24 8hr Response 1-7000VA	1-7000	EBM's for 9PX, 9130, FERRUPS, 9170+ 3-6 Slot, EX	$880
EB871XXX-11000BC	1YR Flex EBM Onsite Service, 7x24 8hr Response 7-11kVA	7001-11000	EBM's for 9PX, 9130, FERRUPS, 9170+ 9 Slot, EX	$618
EB873XXX-11000BC	3YR Flex EBM Onsite Service, 7x24 8hr Response 7-11kVA	7001-11000	EBM's for 9PX, 9130, FERRUPS, 9170+ 9 Slot, EX	$1,732
EB871XXX-18000BC	1YR Flex EBM Onsite Service, 7x24 8hr Response 11-18kVA	11001-18000	EBM's for 9PX, 9130, FERRUPS, 9170+ 12 Slot, EX	$2,031
EB873XXX-18000BC	3YR Flex EBM Onsite Service, 7x24 8hr Response 11-18kVA	11001-18000	EBM's for 9PX, 9130, FERRUPS, 9170+ 12 Slot, EX	$5,687

Style Number	Description	Range	Applicable UPS Models	List Price
UPS Preventive Maintenance				
0005NXXX-6009UC	Onsite UPS PM 7x24, First Unit	1-6000	9PX, 9130, FERRUPS, 9170+, EX	$1,053
0005NXXX-11000UC	Onsite UPS PM 7x24, First Unit	6001-11000	9PX, 9130, FERRUPS, 9170+, EX	$1,110
0005NXXX-18000UC	Onsite UPS PM 7x24, First Unit	11001-18000	9PX, 9130, FERRUPS, 9170+, EX	$1,220
0005N2XX-6009UC	Onsite UPS PM 7x24, Second Unit	1-6000	9PX, 9130, FERRUPS, 9170+, EX	$736
0005N2XX-11000UC	Onsite UPS PM 7x24, Second Unit	6001-11000	9PX, 9130, FERRUPS, 9170+, EX	$777
0005N2XX-18000UC	Onsite UPS PM 7x24, Second Unit	11001-18000	9PX, 9130, FERRUPS, 9170+, EX	$854
Assembly, Startup and Monitoring				
AS00NXXX-6009UC	Scheduled UPS Assembly Service 7x24	1-6000	9PX, 9130, FERRUPS, 9170+, EX	$510
AS00NXXX-11000UC	Scheduled UPS Assembly Service 7x24	6001-11000	9PX, 9130, FERRUPS, 9170+, EX	$834
AS00NXXX-18000UC	Scheduled UPS Assembly Service 7x24	11001-18000	9PX, 9130, FERRUPS, 9170+, EX	$834
SU05NXXX-6009UC	Onsite 1P UPS Startup 7x24, First Unit	1-6000	9PX, 9130, FERRUPS, 9170+, EX	$1,053
SU05NXXX-11000UC	Onsite 1P UPS Startup 7x24, First Unit	6001-11000	9PX, 9130, FERRUPS, 9170+, EX	$1,303
SU05NXXX-18000UC	Onsite 1P UPS Startup 7x24, First Unit	11001-18000	9PX, 9130, FERRUPS, 9170+, EX	$1,497
SU052XXX-6009UC	Onsite 1P UPS Startup 7x24, Second Unit	1-6000	9PX, 9130, FERRUPS, 9170+, EX	$526
SU052XXX-11000UC	Onsite 1P UPS Startup 7x24, Second Unit	6001-11000	9PX, 9130, FERRUPS, 9170+, EX	$652
SU052XXX-18000UC	Onsite 1P UPS Startup 7x24, Second Unit	11001-18000	9PX, 9130, FERRUPS, 9170+, EX	$749
XXXXNEXX-6009UC	Enotify Remote Monitoring Per Year	1-6000	9PX, 9130, FERRUPS, 9170+, EX	$230
XXXXNEXX-11000UC	Enotify Remote Monitoring Per Year	6001-11000	9PX, 9130, FERRUPS, 9170+, EX	$230
XXXXNEXX-18000UC	Enotify Remote Monitoring Per Year	11001-18000	9PX, 9130, FERRUPS, 9170+, EX	$409

IPM INSTALLATION SERVICE

Part Number	Description	List Price
SX06NXXX-001X	Eaton IPM Software Installation Service - One Day Onsite	$3,250
SX06NXXX-002X	Eaton IPM Software Installation Service - Two Day Onsite	$5,250

SERVICES

Single-phase Service Plans *(continued)*

SINGLE-PHASE 9170+ AND FERRUPS EBM REFERENCE TABLE

Part Number	VA Range	Applicable UPS Models	Applicable EBM
EB871XXX-7000BC	1-7000	5 and 9 Series, FERRUPS, 9170+ Eaton UPS	9170+ 3-slot, 6-slot; EBPS12.5, EBPS18, 8FE, 2FE 9FE, 16FE 2re, 1rd, 8ME EBPS4.3R, 9ME EBPS10, 24ME 1FE, 25ME 1re
EB873XXX-7000BC	1-7000	5 and 9 Series, FERRUPS, 9170+ Eaton UPS	9170+ 3-slot, 6-slot; EBPS12.5, EBPS18, 8FE, 2FE 9FE, 16FE 2re, 1rd, 8ME EBPS4.3R, 9ME EBPS10, 24ME 1FE, 25ME 1re
EB871XXX-11000BC	7001-11000	9 Series, FERRUPS, 9170+ Eaton UPS	9170+ 9-slot; 10ME 11ME, 12ME 3FE, 4FE 2rd, 13ME, 5FE, 3rd, 10FE, 17FE
EB873XXX-11000BC	7001-11000	9 Series, FERRUPS, 9170+ Eaton UPS	9170+ 9-slot; 10ME 11ME, 12ME 3FE, 4FE 2rd, 13ME, 5FE, 3rd, 10FE, 17FE
EB871XXX-18000BC	11001-18000	9 Series, FERRUPS, 9170+ Eaton UPS	9170+ 12-slot; 14ME, 6FE, 11FE, 12FE, 18FE, 19FE, 15ME, 7FE, 13FE, 20FE, 14FE, 21FE, 15FE, 22FE
EB873XXX-18000BC	11001-18000	9 Series, FERRUPS, 9170+ Eaton UPS	9170+ 12-slot; 14ME, 6FE, 11FE, 12FE, 18FE, 19FE, 15ME, 7FE, 13FE, 20FE, 14FE, 21FE, 15FE, 22FE

Notes:
Flex (FL), Warranty Upgrade (WU) = parts and labor onsite 7x24, next day or 8-hour response (where available)

Important Notes:
1) Extended Warranty extends term of Factory Warranty and adds Advanced Exchange
2) Factory Warranty - Return Process
- Customer returns unit to Eaton (customer pays freight)
- Eaton ground ships replacement unit (on receipt of defective unit)
- Eaton covers freight to customer

3) Advanced Exchange - Return Process
- Eaton overnight ships replacement unit (on customer contact)
- Customer returns defective unit in overnight packaging
- Eaton covers freight in both directions

4) Extended Warranty "buy/resell" multiplier matches new product (hardware) multiplier
5) Prices apply to equipment installed in US 50 states
6) 9170+ uses the total KVA installed for service pricing (e. 3kVA N+1 = 6kVA)
7) Above prices are for concurrently sold services (with a new product sale); for non-concurrent service pricing and availability contact Eaton at 800/843-9433 opt. 4 or ServiceSalesPricing@Eaton.com
8) Renewals beyond the initial warranty or extension must be purchased prior to any lapse in coverage or a new battery purchase is required (no grace period)

SERVICES

Single-phase Service Plans *(continued)*

9155 SCHEDULED SERVICES & ONSITE SERVICE PLANS (CONCURRENT)

Style Number	Description	Range	Applicable UPS Models	List Price
First Year 9155 UPS Coverage (Next Day, 8 and 4-hour response)				
W1FLN75XXX-0010	Flex: Next Day Rsp, 7x24 Cvg Only	8-10	9155 Warranty YR1	$492
W1FLN75EXX-0010	Flex: Next Day Rsp, 7x24 Cvg, Enotify Only	8-10	9155 Warranty YR1	$606
W1FL875XXX-0010	Flex: 8 Hr Rsp, 7x24 Cvg Only	8-10	9155 Warranty YR1	$621
W1FL875EXX-0010	Flex: 8 Hr Rsp, 7x24 Cvg, Enotify Only	8-10	9155 Warranty YR1	$736
W1FL475XXX-0010	Flex: 4 Hr Rsp, 7x24 Cvg Only	8-10	9155 Warranty YR1	$776
W1FL475EXX-0010	Flex: 4 Hr Rsp, 7x24 Cvg, Enotify Only	8-10	9155 Warranty YR1	$891
W1PVN35EXX-0010	Powertrust Value Service Plan	8-10	9155 Warranty YR1	$1,003
W1PT825EDX-0010	Powertrust Service Plan 8 Hr	8-10	9155 Warranty YR1	$1,309
W1PT425EDX-0010	Powertrust Service Plan 4 Hr	8-10	9155 Warranty YR1	$1,465
W1FLN75XXX-0015	Flex: Next Day Rsp, 7x24 Cvg Only	12-15	9155 Warranty YR1	$561
W1FLN75EXX-0015	Flex: Next Day Rsp, 7x24 Cvg, Enotify Only	12-15	9155 Warranty YR1	$675
W1FL875XXX-0015	Flex: 8 Hr Rsp, 7x24 Cvg Only	12-15	9155 Warranty YR1	$710
W1FL875EXX-0015	Flex: 8 Hr Rsp, 7x24 Cvg, Enotify Only	12-15	9155 Warranty YR1	$825
W1FL475XXX-0015	Flex: 4 Hr Rsp, 7x24 Cvg Only	12-15	9155 Warranty YR1	$887
W1FL475EXX-0015	Flex: 4 Hr Rsp, 7x24 Cvg, Enotify Only	12-15	9155 Warranty YR1	$1,002
W1PVN35EXX-0015	Powertrust Value Service Plan	12-15	9155 Warranty YR1	$1,063
W1PT825EDX-0015	Powertrust Service Plan 8 Hr	12-15	9155 Warranty YR1	$1,413
W1PT425EDX-0015	Powertrust Service Plan 4 Hr	12-15	9155 Warranty YR1	$1,590
2+ Year 9155 UPS Coverage (Next Day, 8 and 4-hour response)				
W2FLN75XXX-0010	Flex: Next Day Rsp, 7x24 Cvg Only	8-10	9155 Post Warranty	$982
W2FLN75EXX-0010	Flex: Next Day Rsp, 7x24 Cvg, Enotify Only	8-10	9155 Post Warranty	$1,212
W2FL875XXX-0010	Flex: 8 Hr Rsp, 7x24 Cvg Only	8-10	9155 Post Warranty	$1,241
W2FL875EXX-0010	Flex: 8 Hr Rsp, 7x24 Cvg, Enotify Only	8-10	9155 Post Warranty	$1,471
W2FL475XXX-0010	Flex: 4 Hr Rsp, 7x24 Cvg Only	8-10	9155 Post Warranty	$1,552
W2FL475EXX-0010	Flex: 4 Hr Rsp, 7x24 Cvg, Enotify Only	8-10	9155 Post Warranty	$1,782
W2PVN35EXX-0010	Powertrust Value Service Plan	8-10	9155 Post Warranty	$2,007
W2PT825EDX-0010	Powertrust Service Plan 8 Hr	8-10	9155 Post Warranty	$2,620
W2PT425EDX-0010	Powertrust Service Plan 4 Hr	8-10	9155 Post Warranty	$2,930
W2FLN75XXX-0015	Flex: Next Day Rsp, 7x24 Cvg Only	12-15	9155 Post Warranty	$1,121
W2FLN75EXX-0015	Flex: Next Day Rsp, 7x24 Cvg, Enotify Only	12-15	9155 Post Warranty	$1,351
W2FL875XXX-0015	Flex: 8 Hr Rsp, 7x24 Cvg Only	12-15	9155 Post Warranty	$1,421
W2FL875EXX-0015	Flex: 8 Hr Rsp, 7x24 Cvg, Enotify Only	12-15	9155 Post Warranty	$1,650
W2FL475XXX-0015	Flex: 4 Hr Rsp, 7x24 Cvg Only	12-15	9155 Post Warranty	$1,775
W2FL475EXX-0015	Flex: 4 Hr Rsp, 7x24 Cvg, Enotify Only	12-15	9155 Post Warranty	$2,004
W2PVN35EXX-0015	Powertrust Value Service Plan	12-15	9155 Post Warranty	$2,125
W2PT825EDX-0015	Powertrust Service Plan 8 Hr	12-15	9155 Post Warranty	$2,826
W2PT425EDX-0015	Powertrust Service Plan 4 Hr	12-15	9155 Post Warranty	$3,180
9155 UPS and Battery Preventive Maintenance (First Year and 2+ Year)				
W100055S036	Sealed Battery Preventive Maintenance, Any Time	8-15	9155 Warranty YR1	$404
W100055INT	Sealed Battery Preventive Maintenance, Any Time	8-15	9155 Warranty YR1	$482
W100055S072	Sealed Battery Preventive Maintenance, Any Time	8-15	9155 Warranty YR1	$727
W200055S036	Sealed Battery Preventive Maintenance, Any Time	8-15	9155 Post Warranty	$808
W200055INT	Sealed Battery Preventive Maintenance, Any Time	8-15	9155 Post Warranty	$965
W200055S072	Sealed Battery Preventive Maintenance, Any Time	8-15	9155 Post Warranty	$1,455
W100065XXX-0010	UPS Preventive Maintenance, Business Hours (5x8)	8-10	9155 Warranty YR1	$497
W200065XXX-0010	UPS Preventive Maintenance, Business Hours (5x8)	8-10	9155 Post Warranty	$992
W100055XXX-0010	UPS Preventive Maintenance, After Hours (7x24)	8-10	9155 Warranty YR1	$652
W200055XXX-0010	UPS Preventive Maintenance, After Hours (7x24)	8-10	9155 Post Warranty	$1,303
W100065XXX-0015	UPS Preventive Maintenance, Business Hours (5x8)	12-15	9155 Warranty YR1	$500
W200065XXX-0015	UPS Preventive Maintenance, Business Hours (5x8)	12-15	9155 Post Warranty	$999
W100055XXX-0015	UPS Preventive Maintenance, After Hours (7x24)	12-15	9155 Warranty YR1	$610
W200055XXX-0015	UPS Preventive Maintenance, After Hours (7x24)	12-15	9155 Post Warranty	$1,220

SERVICES

Single-phase Service Plans *(continued)*

9155 SCHEDULED SERVICES & ONSITE SERVICE PLANS (CONCURRENT) *(continued)*

Style Number	Description	Range	Applicable UPS Models	List Price
9155 Battery Replacement Coverage				
W2BL075AXX	2 Year Battery Labor Coverage Adder, 9155	8-15	9155 External Battery Warranty Extension - First 2YRS	$334
W2FB075XXX-EB64	Full Battery Coverage EBM 64, 9155	8-15	9155 External Battery Warranty Extension Per YR	$909
W2FB075XXX-EB96	Full Battery Coverage EBM 96, 9155	8-15	9155 External Battery Warranty Extension Per YR	$1,248
W2FB075XXX-IN32	Full Battery Coverage Internal, 9155	8-15	9155 External Battery Warranty Extension Per YR	$588
W2FB075XXX-IN64	Full Battery Coverage Internal, 9155	8-15	9155 External Battery Warranty Extension Per YR	$828
9155 Presite, Assembly, Startup and Upgrades				
W200055PSX-0010	Pre Site Survey, After Hours (7x24)	8-10	9155 Startup, Inspection or Assembly	$1,110
W2AS005000-0010	Scheduled Assembly Service 7x24	8-10	9155 Startup, Inspection or Assembly	$510
W2SU065XXX-0010	Start Up, Business Hours (5x8), First Unit, 9155	8-10	9155 Startup, Inspection or Assembly	$1,081
W2SU063XXX-0010	Start Up, Business Hours (5x8), Second Unit, 9155	8-10	9155 Startup, Inspection or Assembly	$541
W2SU055XXX-0010	Start Up, After Hours (7x24), First Unit, 9155	8-10	9155 Startup, Inspection or Assembly	$1,303
W2SU053XXX-0010	Start Up, After Hours (7x24), Second Unit, 9155	8-10	9155 Startup, Inspection or Assembly	$652
W2UP055XXX-0010	Upgrade From 5x8 To 7x24 Startup 10kVA, 9155	8-10	9155 Startup, Inspection or Assembly	$221
W200055PSX-0015	Pre Site Survey, After Hours (7x24)	12-15	9155 Startup, Inspection or Assembly	$1,110
W2AS005000-0015	Scheduled Assembly Service 7x24	12-15	9155 Startup, Inspection or Assembly	$834
W2SU065XXX-0015	Start Up, Business Hours (5x8), First Unit, 9155	12-15	9155 Startup, Inspection or Assembly	$1,220
W2SU063XXX-0015	Start Up, Business Hours (5x8), Second Unit, 9155	12-15	9155 Startup, Inspection or Assembly	$610
W2SU055XXX-0015	Start Up, After Hours (7x24), First Unit, 9155	12-15	9155 Startup, Inspection or Assembly	$1,497
W2SU053XXX-0015	Start Up, After Hours (7x24), Second Unit, 9155	12-15	9155 Startup, Inspection or Assembly	$749
W2UP055XXX-0015	Upgrade From 5x8 To 7x24 Startup 10kVA, 9155	12-15	9155 Startup, Inspection or Assembly	$277

Important Notes:

1) 9155 service plans include internal battery coverage; to add external battery coverage purchase Full Battery Coverage

2) Eaton 9155 includes a standard 2 year factory warranty (depot exchange)

3) Prices apply to equipment installed in US 50 states and equipment must be within 100 miles of the nearest Eaton field technician

4) Above prices are for concurrently sold services (with a new product sale); for non-concurrent service pricing and availability contact Eaton at 800/843-9433 opt. 4 or ServiceSalesPricing@Eaton.com

5) Renewals beyond the initial warranty or extension must be purchased prior to any lapse in coverage or a new battery purchase is required (no grace period)

SERVICES

Three-phase Service Plans Overview

Eaton's three-phase UPS service options, provide the uptime, convenience and value that's right for you and your business. You can leverage onsite services to meet your specific needs for UPSs, batteries and related equipment. With 240 customer service engineers in North America, we have more factory-trained personnel than any other UPS manufacturer and customers consistently rank our service number one in quality.

Three-phase Service Plan Features	PowerTrust Value	ProActive	PowerTrust	PowerTrust Preferred	Flex
Parts and Labor for Electronics	•	•	•	•	o
Parts and Labor for Batteries	o	o	o	o	o
5x8 Onsite Corrective Maintenance	•				o
7x24 Onsite Corrective Maintenance		•	•	•	o
Next Business Day Response	•				o
8-Hour Response		•	•	•	o
4-Hour Response		o	o	o	o
5x8 UPS Preventive Maintenance Visit	1 per year	o	1 per year	o	o
7x24 UPS Preventive Maintenance Visit	o	1 per year	o	2 per year	o
Battery Preventive Maintenance Visit	o	o	1 per year	2 per year	o
eNotify Remote Monitoring Service	•	•	•	•	o
Discounted Spare Parts & Upgrade Kits & T&M		30%	30%	30%	

• Included feature o Optional feature

Eaton's most popular on-site UPS support plans come standard with the above features. Additional preventive maintenance visits can be added to any packaged plan. Flex Support Plans should be used whenever a standard packaged service plan doesn't exactly match your needs. Select W1 items when service is to be started during the first year warranty period and W2 items for services to start at year 2 (post warranty) or later. Service may be sold for up to 5 year terms. Startup service may be purchased for the first unit or second unit, with discounts included in the price.

All three-phase service pricing is available online at Eaton.com/powerquality. You can use the service configurator to determine the cost and appropriate amount of coverage for your purchase. Registration may be required. If you have any questions please call 1-800-356-5794.

SERVICES

Three-phase Service Plans Overview

TIME AND MATERIAL SERVICE RATE SCHEDULE

The following rate schedule applies to all services rendered on non-contracted and non-warranty equipment and to all services performed on contracted equipment where the service performed is outside the scope of the contracted coverage. Labor rates are based on the actual time of delivery. Specific contract customers may be eligible for discounts on time and material charges.

3-Phase Products - Portal to Portal Labor per Hour (Onsite and Travel Time)	**Current List Price**
Mon. – Fri., Business Hours (8AM – 5PM):	$270
Mon. – Fri., After Business Hours (5PM – 8AM):	$345
Weekends and Holidays (Saturday 12:01AM – Sunday Midnight):	$430
3-Phase Products - Minimum Labor Billing (minimum value range equal to above rates x hourly minimum)	
Equipment below 200kVA, Five day or less response (4 hour min.):	$1,080 to $1,720
Equipment 200kVA and above or Multi Module, Five day or less response (6 hour min.):	$1,620 to $2,580
Equipment 200kVA and above or Multi Module, Two day or less response (8 hour min.):	$2,160 to $3,440
1-Phase Products - Portal to Portal Labor per Hour (Onsite and Travel Time)	
Mon. – Fri., Business Hours (8AM – 5PM):	$215
Mon. – Fri., After Business Hours (5PM – 8AM), Weekends and Holidays:	$345
1-Phase Products - Minimum Labor Billing (minimum value range equal to above rates x hourly minimum)	
Equipment below 200kVA, Five day or less response (4 hour min.):	$860 to $1,380
Equipment 200kVA and above or Multi Module, Five day or less response (6 hour min.):	$1,290 to $2,070
Equipment 200kVA and above or Multi Module, Two day or less response (8 hour min.):	$1,720 to $2,760
Travel & Living Expenses	
Transportation:	
3-Phase Products:	Automobile mileage included in labor rates
1-Phase Products:	Automobile mileage at $ 0.75 per mile
All others (air fare, car rental, tolls, etc.):	Actual
Lodging & Meals:	Actual
Calculation of Labor and Mileage Charges:	**Portal to Portal (travel labor and mileage)**
Materials/Spare Parts	**Current List Price**
Minimum billing:	$130 Domestic, $320 International
Parts Expedite Fees	
Mon. – Fri., Business Hours (8AM – 5PM):	$130
Mon. – Fri., After Business Hours (5PM – 8AM):	$290
Weekends and Holidays:	$465
Freight Expense	
Freight – FOB Factory:	Actual
Same Day Delivery:	$180 plus Actual Freight
Depot Repair Labor:	**$145 per hour**
Minimum Billing:	$145
Expediting Fee:	$120

Note: Three-phase products include Eaton BladeUPS, Best Power Unity UT3; single-phase products include Eaton 9155, Powerware 9150, Best Power Unity UT3K, UT8K

RMA POLICY AND PRODUCT WARRANTIES

Sales Returned Merchandise Authorization (RMA) Policy

Written authority from Eaton must be obtained before any return or credit will be allowed.

Sales RMAs will be issued for new, unused equipment that is:
A. Within 30 days of original shipment date
B. Returned in original sealed packaging
C. Returned in unmodified, untampered, original condition
D. A current design

Cancellations and Erroneous Orders:
Any order for standard Eaton products may not be cancelled within thirty days of the date scheduled for shipment/delivery by Eaton. Otherwise the order may be cancelled in accordance with the following:

- Sales RMAs issued for cancellations and erroneous orders will be subject to a minimum 15% restocking/cancellation fee
- Restocking/cancellation fee for standard product will be 15%
- Restocking/cancellation fee for special, custom or configured products will be a minimum of 50%
- The buyer is responsible for both inbound and outbound freight charges

Note: Charges may be waived by mutual agreement between buyer and seller. Proper approval and authorization must be obtained and documented in writing before the transaction is initiated.

Erroneous Shipments:
Sales RMAs necessary as a result of shipping/order entry errors will be issued and transacted with no charge to the buyer. Eaton will pay inbound freight, and outbound freight will be similar service level as original shipment.

RMA Expiration:
An RMA is valid for 60 calendar days from date of authorization by Eaton, after which it is subject to cancellation.

Sales Contracts:
An active Sales Contract with clauses relating to return of product for sales credits may supersede the Sales RMA policy statements above.

To request a Sales RMA please contact:

800.356.5794
e-mail: salesrma@eaton.com

WARRANTY

Eaton Corporation Load Protection Guarantee (US and Canada)

UPS MODELS: 3105, 3S, 5S, 5SC, 5110, 5115, 5125, 5P, 5PX, 9130, 9135, 9140, 9PX, 9155, 9170+ AND FERRUPS

GUARANTOR: The Guarantor for the load protection guaranty set forth herein is Eaton ("Company").

LIMITED GUARANTY: This load protection guaranty (this "Guaranty") applies only to the original End-user (the "End-user") of any 3105, 3S, 5S, 5SC, 5110, 5115, 5125, 5130, 5P, 5PX, 9130, 9135, 9140, 9PX, 9155, 9170+ and FERRUPS Products (individually and collectively, the "Product") and cannot be transferred. This Guaranty applies even in the event that the Product is initially sold by Company for resale to an End-User.

WHAT THIS GUARANTY COVERS: For the lifetime of the Product, Guarantor promises to repair or replace, at Guarantor's option, the equipment (valued up to the limits shown below*) that is damaged by an AC power line surge, spike or other transient when properly connected to Guarantor's uninterruptible power system ("UPS"). Reimbursement for or restoration of data loss excluded. This Guaranty applies only if all of the following circumstances arise:

1. The UPS is plugged into properly grounded and wired outlets, using no extension cords, adapters, other ground wires or other electrical connectors;
2. The installation of the UPS complies with all applicable electrical and safety codes described by the National Electric Code (NEC);
3. The UPS was used under normal operating conditions and in accordance with all labels and instructions; and
4. The UPS was not damaged by accident (other than AC power line transient), misuse or abuse.

***Cumulative Limits to be paid by Guarantor under this Load Protection Guaranty:**

$25,000 for UPS Model 3105 and 3S

$150,000 for UPS Models 5SC, 5110, 5115, 5125, 5P and 5PX

$250,000 for UPS Models 9130, 9135, 9140, 9PX, 9155, 9170+ and FERRUPS products

WHAT THIS GUARANTY DOES NOT COVER: Any reimbursement or repair to End-user's equipment does not include reimbursement for or restoration of any data loss. This Guaranty does not cover any defects or damages caused by: (a) failure to properly store the Product before installation, including the charge of batteries no later than the date indicated on the packaging; (b) shipping and delivery of the Product if shipping is FOB Factory; (c) neglect, accident, abuse, misuse, misapplication, or incorrect installation of Product; (d) repair or alteration of Product not authorized in writing by Company personnel or performed by an authorized Company Customer Service Engineer or Agent; (e) improper testing, operation, maintenance, adjustment, or modification of any kind to the Product not authorized in writing by Company personnel or performed by an authorized Company Customer Service Engineer or Agent; or (f) use of the Product under other than normal operating conditions or in a manner inconsistent with the Product's labels or instructions.

This Guaranty is not valid: (a) unless the End-user returns to Company the Warranty Registration Card or completes the registration form on www.powerquality.eaton.com/productregistration within thirty (30) days of purchase; or (b) if the Product's serial numbers have been removed or are illegible.

Company shall not be responsible for any charges for testing, checking, removal or installation of any items.

LIMITATION OF LIABILITY: THE REMEDIES OF THE END-USER SET FORTH HEREIN ARE EXCLUSIVE AND ARE THE SOLE REMEDIES FOR ANY FAILURE OF COMPANY TO COMPLY WITH ITS OBLIGATIONS HEREUNDER. EXCEPT AS OTHERWISE PROVIDED FOR IN THIS GUARANTY, IN NO EVENT SHALL COMPANY BE LIABLE IN CONTRACT, IN TORT (INCLUDING NEGLIGENCE OR STRICT LIABILITY) OR OTHERWISE FOR DAMAGE TO PROPERTY OR EQUIPMENT OTHER THAN THE PRODUCTS, INCLUDING LOSS OF PROFITS OR REVENUE, LOSS OF USE OF PRODUCTS, LOSS OF DATA, COST OF CAPITAL, CLAIMS OF CUSTOMERS OF THE END-USER OR ANY SPECIAL, INDIRECT, INCIDENTAL OR CONSEQUENTIAL DAMAGES WHATSOEVER. THE TOTAL CUMULATIVE LIABILITY OF COMPANY HEREUNDER WHETHER THE CLAIMS ARE BASED IN CONTRACT (INCLUDING INDEMNITY), IN TORT (INCLUDING NEGLIGENCE OR STRICT LIABILITY) OR OTHERWISE, SHALL NOT EXCEED THOSE SET FORTH ABOVE.

Company shall not be responsible for failure to provide repair or replacement under this Guaranty due to causes beyond Company's reasonable control.

END-USER'S OBLIGATIONS: In order to receive the benefits of this Guaranty, the End-user must use the Product in a normal way; follow the Product's operation and maintenance manual; and protect against further damage to the Product if there is a covered defect.

OTHER LIMITATIONS: Company's obligations under this Guaranty are expressly conditioned upon receipt by Company of all payments due to it (including interest charges, if any). During such time as Company has not received payment of any amount due to it for the Product, in accordance with the contract terms under which the Product is sold, Company shall have no obligation under this Guaranty.

COSTS NOT RELATED TO GUARANTY: The End-user shall be invoiced for, and shall pay for, all services not expressly provided for by the terms of this Guaranty, including without limitation, site calls involving an inspection that determines no corrective maintenance is required. Any costs for replacement equipment, installation, materials, freight charges, travel expenses or labor of Company representatives outside the terms of this Guaranty will be borne by the End-user.

TO MAKE A CLAIM: In the USA, call the Customer Reliability Center 7x24 at 800.356.5737. Outside of the USA, contact your local Eaton product sales or service representative, or call the Customer Reliability Center in the USA at 919.870.3149. For comments or questions about this Load Protection Guaranty, write to the Customer Quality Representative, 3301 Spring Forest Road, Raleigh, North Carolina 27616 USA.

WARRANTY

Limited Warranty

UPS MODELS: 3105, 3S, 5S, 5SC, 5110, 5115, 5125, 5P AND 5PX (USA AND CANADA)

WARRANTOR: The warrantor for the limited warranties set forth herein is Eaton ("Company").

LIMITED WARRANTY: This limited warranty (this "Warranty") applies only to the original End-user (the "End-user") of any 3105, 3S, 5S, 5SC, 5110, 5115, 5125, 5P and 5PX Products (individually and collectively, the "Product") purchased on or after August 19th, 2009, and cannot be transferred. This Warranty applies even in the event that the Product is initially sold by Company for resale to an End-user.

LIMITED WARRANTY PERIOD: The period covered by this Warranty for Product installed [and currently located] in the fifty (50) United States, the District of Columbia and Canada is twenty-four (24) months from the date of purchase, or thirty (30) months from the date of shipment. For units that are registered online at www.eaton.com/PQ/Register, the warranty is extended to thirty-six (36) months from the date of purchase, or forty-two (42) months from the date of shipment.

WHAT THIS LIMITED WARRANTY COVERS: The warrantor warrants that the Product and battery (individually and collectively, the "Warranted Items") are free of defects in material and workmanship. If, in the opinion of Company, a Warranted Item is defective and the defect is within the terms of this Warranty, Company's sole obligation will be to repair or replace such defective Warranted Item (including by providing service, parts and labor, as applicable), at the option of Company.

PROCEDURES FOR REPAIR OR REPLACEMENT OF WARRANTED ITEMS: The Warranted Item will be repaired or replaced at a Company site or such other location as determined by Company.

If the Warranted Item is to be replaced by Company, and the End-user supplies a credit card number or purchase order for the value of the replacement product, Company will use commercially reasonable business efforts to ship (via standard ground shipment and at no cost to the End-user) the replacement Warranted Item to the End-user within one (1) business day after Company receives notice of the warranty claim. In such case, the End-user must return (at Company's expense) the defective Warranted Item to Company in the same packaging as the replacement Warranted Item received by the End-user or as otherwise instructed by Company. If Company does not receive the defective Warranted Item, Company will either charge the End-user's credit card, or send the End-user an invoice (which the End-user agrees to pay), for the value of the replacement product.

If the Warranted Item is to be replaced by Company, but the End-user is unwilling or unable to supply a credit card number or purchase order for the value of the replacement product, Company will use commercially reasonable business efforts to ship (via standard ground shipment and at no cost to the End-user) the replacement Warranted Item to the End-user within one (1) business day after Company receives the defective product from the End-user.

In any case, Company will provide shipping instructions and will pay its designated carrier for all shipping charges for return of defective equipment and replacement of Warranted Items. Any returned Warranted Item or parts that are replaced may be new or reconditioned. All Warranted Items returned to Company and all parts replaced by Company shall become the property of Company.

WHAT THIS LIMITED WARRANTY DOES NOT COVER: This Warranty does not cover any defects or damages caused by: (a) failure to properly store the Product before installation, including the charge of batteries no later than the date indicated on the packaging; (b) shipping and delivery of the Product if shipping is FOB Factory; (c) neglect, accident, abuse, misuse, misapplication or incorrect installation; (d) repair or alteration not authorized in writing by Company personnel or performed by an authorized Company Customer Service Engineer or Agent; (e) improper testing, operation, maintenance, adjustment or modification of any kind not authorized in writing by Company personnel or performed by an authorized Company Customer Service Engineer or Agent; or (f) use of the Product under other than normal operating conditions or in a manner inconsistent with the Product's labels or instructions.

This Warranty is not valid if the Product's serial numbers have been removed or are illegible. Any Warranted Items repaired or replaced pursuant to this Warranty will be warranted for the remaining portion of the original Warranty subject to all the terms thereof.

WARRANTY
Limited Warranty *(continued)*

Company shall not be responsible for any charges for testing, checking, removal or installation of Warranted Items.

COMPANY DOES NOT WARRANT EQUIPMENT NOT MANUFACTURED BY COMPANY. IF PERMITTED BY THE APPLICABLE MANUFACTURER, COMPANY SHALL PASS THROUGH SUCH MANUFACTURER'S WARRANTIES TO END-USER.

COMPANY DOES NOT WARRANT SOFTWARE, INCLUDING SOFTWARE EMBEDDED IN PRODUCTS, THAT IS NOT CREATED BY COMPANY. WITHOUT LIMITING THE FOREGOING, COMPANY SPECIFICALLY DOES NOT WARRANT SOFTWARE (SUCH AS LINUX) THAT WAS CREATED USING AN "OPEN SOURCE" MODEL OR IS DISTRIBUTED PURSUANT TO AN OPEN SOURCE LICENSE.

THIS WARRANTY IS THE SOLE AND EXCLUSIVE WARRANTY OFFERED BY COMPANY WITH RESPECT TO THE PRODUCTS AND SERVICES AND, EXCEPT FOR SUCH FOREGOING WARRANTY COMPANY DISCLAIMS ALL OTHER WARRANTIES INCLUDING BUT NOT LIMITED TO ANY IMPLIED WARRANTIES OF MERCHANTABILITY, TITLE, NON-INFRINGEMENT AND FITNESS FOR A PARTICULAR PURPOSE. CORRECTION OF NON-CONFORMITIES IN THE MANNER AND FOR THE PERIOD OF TIME PROVIDED ABOVE SHALL CONSTITUTE COMPANY'S SOLE LIABILITY AND END-USER'S EXCLUSIVE REMEDY FOR FAILURE OF COMPANY TO MEET ITS WARRANTY OBLIGATIONS, WHETHER CLAIMS OF THE END-USER ARE BASED IN CONTRACT, IN TORT (INCLUDING NEGLIGENCE OR STRICT LIABILITY) OR OTHERWISE.

LIMITATION OF LIABILITY: The remedies of the End-user set forth herein are exclusive and are the sole remedies for any failure of Company to comply with its obligations hereunder. In no event shall Company be liable in contract, in tort (including negligence or strict liability) or otherwise for damage to property or equipment other than the Products, including loss of profits or revenue, loss of use of Products, loss of data, cost of capital, claims of customers of the End-user or any special, indirect, incidental or consequential damages whatsoever. The total cumulative liability of Company hereunder whether the claims are based in contract (including indemnity), in tort (including negligence or strict liability) or otherwise, shall not exceed the price of the Product on which such liability is based.

Company shall not be responsible for failure to provide service or parts due to causes beyond Company's reasonable control.

END-USER'S OBLIGATIONS: In order to receive the benefits of this Warranty, the End-user must use the Product in a normal way; follow the Product's operation and maintenance manual; and protect against further damage to the Product if there is a covered defect.

OTHER LIMITATIONS: Company's obligations under this Warranty are expressly conditioned upon receipt by Company of all payments due to it (including interest charges, if any). During such time as Company has not received payment of any amount due to it for the Product, in accordance with the contract terms under which the Product is sold, Company shall have no obligation under this Warranty. Also during such time, the period of this Warranty shall continue to run and the expiration of this Warranty shall not be extended upon payment of any overdue or unpaid amounts.

COSTS NOT RELATED TO WARRANTY: The End-user shall be invoiced for, and shall pay for, all services not expressly provided for by the terms of this Warranty, including without limitation, site calls involving an inspection that determines no corrective maintenance is required. Any costs for replacement equipment, installation, materials, freight charges, travel expenses or labor of Company representatives outside the terms of this Warranty will be borne by the End-user.

OBTAINING WARRANTY SERVICE: In the USA, call the Customer Reliability Center 7x24 at 800.356.5737. Outside of the USA, contact your local Eaton product sales or service representative for units purchased from those countries, or call the Customer Reliability Center in the USA at 919.845.3683 for units purchased in the USA that were shipped overseas. For comments or questions about this Warranty, write to the Customer Quality Representative, 8609 Six Forks Road, Raleigh, North Carolina 27615 USA.

WARRANTY

Two-Year Limited Warranty

UPS MODELS: 9130, 9135, 9140, 9PX AND FERRUPS UP TO 3.1 kVA (USA AND CANADA)

WARRANTOR: The warrantor for the limited warranties set forth herein is Eaton ("Company").

LIMITED WARRANTY: This limited warranty (this "Warranty") applies only to the original End-user (the "End-user") of any 9130, 9135, 9140, 9PX and FERRUPS up to 3.1 kVA Products (individually and collectively, the "Product") purchased on or after June 1, 2004, and cannot be transferred. This Warranty applies even in the event that the Product is initially sold by Company for resale to an End-user.

LIMITED WARRANTY PERIOD: The period covered by this Warranty for Product installed [and currently located] in the fifty (50) United States, the District of Columbia and Canada is twenty-four (24) months from the date of purchase, or thirty (30) months from the date of shipment.

WHAT THIS LIMITED WARRANTY COVERS: The warrantor warrants that the Product and battery (individually and collectively, the "Warranted Items") are free of defects in material and workmanship. If, in the opinion of Company, a Warranted Item is defective and the defect is within the terms of this Warranty, Company's sole obligation will be to repair or replace such defective Warranted Item (including by providing service, parts and labor, as applicable), at the option of Company.

PROCEDURES FOR REPAIR OR REPLACEMENT OF WARRANTED ITEMS: The Warranted Item will be repaired or replaced at a Company site or such other location as determined by Company.

If the Warranted Item is to be replaced by Company, and the End-user supplies a credit card number or purchase order for the value of the replacement product, Company will use commercially reasonable business efforts to ship (via standard ground shipment and at no cost to the End-user) the replacement Warranted Item to the End-user within one (1) business day after Company receives notice of the warranty claim. In such case, the End-user must return (at Company's expense) the defective Warranted Item to Company in the same packaging as the replacement Warranted Item received by the End-user or as otherwise instructed by Company. If Company does not receive the defective Warranted Item, Company will either charge the End-user's credit card, or send the End-user an invoice (which the End-user agrees to pay), for the value of the replacement product.

If the Warranted Item is to be replaced by Company, but the End-user is unwilling or unable to supply a credit card number or purchase order for the value of the replacement product, Company will use commercially reasonable business efforts to ship (via standard ground shipment and at no cost to the End-user) the replacement Warranted Item to the End-user within one (1) business day after Company receives the defective product from the End-user.

In any case, Company will provide shipping instructions and will pay its designated carrier for all shipping charges for return of defective equipment and replacement of Warranted Items. Any returned Warranted Item or parts that are replaced may be new or reconditioned. All Warranted Items returned to Company and all parts replaced by Company shall become the property of Company.

WHAT THIS LIMITED WARRANTY DOES NOT COVER: This Warranty does not cover any defects or damages caused by: (a) failure to properly store the Product before installation, including the charge of batteries no later than the date indicated on the packaging; (b) shipping and delivery of the Product if shipping is FOB Factory; (c) neglect, accident, abuse, misuse, misapplication or incorrect installation; (d) repair or alteration not authorized in writing by Company personnel or performed by an authorized Company Customer Service Engineer or Agent; (e) improper testing, operation, maintenance, adjustment or modification of any kind not authorized in writing by Company personnel or performed by an authorized Company Customer Service Engineer or Agent; or (f) use of the Product under other than normal operating conditions or in a manner inconsistent with the Product's labels or instructions.

This Warranty is not valid if the Product's serial numbers have been removed or are illegible. Any Warranted Items repaired or replaced pursuant to this Warranty will be warranted for the remaining portion of the original Warranty subject to all the terms thereof.

WARRANTY

Two-Year Limited Warranty *(continued)*

Company shall not be responsible for any charges for testing, checking, removal or installation of Warranted Items.

COMPANY DOES NOT WARRANT EQUIPMENT NOT MANUFACTURED BY COMPANY. IF PERMITTED BY THE APPLICABLE MANUFACTURER, COMPANY SHALL PASS THROUGH SUCH MANUFACTURER'S WARRANTIES TO END-USER.

COMPANY DOES NOT WARRANT SOFTWARE, INCLUDING SOFTWARE EMBEDDED IN PRODUCTS, THAT IS NOT CREATED BY COMPANY. WITHOUT LIMITING THE FOREGOING, COMPANY SPECIFICALLY DOES NOT WARRANT SOFTWARE (SUCH AS LINUX) THAT WAS CREATED USING AN "OPEN SOURCE" MODEL OR IS DISTRIBUTED PURSUANT TO AN OPEN SOURCE LICENSE.

THIS WARRANTY IS THE SOLE AND EXCLUSIVE WARRANTY OFFERED BY COMPANY WITH RESPECT TO THE PRODUCTS AND SERVICES AND, EXCEPT FOR SUCH FOREGOING WARRANTY COMPANY DISCLAIMS ALL OTHER WARRANTIES INCLUDING BUT NOT LIMITED TO ANY IMPLIED WARRANTIES OF MERCHANTABILITY, TITLE, NON-INFRINGEMENT AND FITNESS FOR A PARTICULAR PURPOSE. CORRECTION OF NON-CONFORMITIES IN THE MANNER AND FOR THE PERIOD OF TIME PROVIDED ABOVE SHALL CONSTITUTE COMPANY'S SOLE LIABILITY AND END-USER'S EXCLUSIVE REMEDY FOR FAILURE OF COMPANY TO MEET ITS WARRANTY OBLIGATIONS, WHETHER CLAIMS OF THE END-USER ARE BASED IN CONTRACT, IN TORT (INCLUDING NEGLIGENCE OR STRICT LIABILITY) OR OTHERWISE.

LIMITATION OF LIABILITY: The remedies of the End-user set forth herein are exclusive and are the sole remedies for any failure of Company to comply with its obligations hereunder. In no event shall Company be liable in contract, in tort (including negligence or strict liability) or otherwise for damage to property or equipment other than the Products, including loss of profits or revenue, loss of use of Products, loss of data, cost of capital, claims of customers of the End-user or any special, indirect, incidental or consequential damages whatsoever. The total cumulative liability of Company hereunder whether the claims are based in contract (including indemnity), in tort (including negligence or strict liability) or otherwise, shall not exceed the price of the Product on which such liability is based.

Company shall not be responsible for failure to provide service or parts due to causes beyond Company's reasonable control.

END-USER'S OBLIGATIONS: In order to receive the benefits of this Warranty, the End-user must use the Product in a normal way; follow the Product's operation and maintenance manual; and protect against further damage to the Product if there is a covered defect.

OTHER LIMITATIONS: Company's obligations under this Warranty are expressly conditioned upon receipt by Company of all payments due to it (including interest charges, if any). During such time as Company has not received payment of any amount due to it for the Product, in accordance with the contract terms under which the Product is sold, Company shall have no obligation under this Warranty. Also during such time, the period of this Warranty shall continue to run and the expiration of this Warranty shall not be extended upon payment of any overdue or unpaid amounts.

COSTS NOT RELATED TO WARRANTY: The End-user shall be invoiced for, and shall pay for, all services not expressly provided for by the terms of this Warranty, including without limitation, site calls involving an inspection that determines no corrective maintenance is required. Any costs for replacement equipment, installation, materials, freight charges, travel expenses or labor of Company representatives outside the terms of this Warranty will be borne by the End-user.

OBTAINING WARRANTY SERVICE: In the USA, call the Customer Reliability Center 7x24 at 800.356.5737. Outside of the USA, contact your local Eaton product sales or service representative for units purchased from those countries, or call the Customer Reliability Center in the USA at 919.845.3683 for units purchased in the USA that were shipped overseas. For comments or questions about this Warranty, write to the Customer Quality Representative, 8609 Six Forks Road, Raleigh, North Carolina 27615 USA.

WARRANTY

Two-Year Limited Warranty

UPS MODELS: 9155, 9170+ AND FERRUPS 4.3–18 kVA (USA AND CANADA)

WARRANTOR: The warrantor for the limited warranties set forth herein is Eaton ("Company").

LIMITED WARRANTY: This limited warranty (this "Warranty") applies only to the original end-user (the "End-user") of any 9155, 9170 and FERRUPS 4.3–18 kVA Products (individually and collectively, the "Product") purchased on or after June 1, 2004, and cannot be transferred. This Warranty applies even in the event that the Product is initially sold by Company for resale to an End-user.

LIMITED WARRANTY PERIOD: The period covered by this Warranty for Product installed [and currently located] in the fifty (50) United States, the District of Columbia and Canada is twenty-four (24) months from the date of purchase for parts, or thirty (30) months from the date of shipment for parts, and ninety (90) days from the date of purchase for labor, as further clarified in the following sections.

WHAT THIS LIMITED WARRANTY COVERS: The warrantor warrants that the Product and battery (individually and collectively, the "Warranted Items") are free of defects in material and workmanship. If, in the opinion of Company, a Warranted Item is defective and the defect is within the terms of this Warranty, Company's sole obligation will be to repair or replace such defective Warranted Items (including by providing service, parts and labor, as applicable), at the option of Company, and such repair or replacement shall be at either the End-user's location, Company's site, or such other location as determined by Company. All Warranted Items returned to Company and all parts replaced by Company shall become the property of Company. Expenses for any labor to repair the Warranted Item beyond the initial ninety (90) days are the sole responsibility of the End-user.

PROCEDURES FOR REPAIR OR REPLACEMENT OF WARRANTED ITEMS: When shipment is required of End-user: When Company determines that the Warranted Item will be repaired or replaced at a Company site or such other location, and the End-user must ship to Company the defective Warranted Item, the following procedures are required.

If the Warranted Item is to be replaced by Company, and the End-user supplies a credit card number or purchase order for the value of the replacement product, Company will use commercially reasonable business efforts to ship (via standard ground shipment and at no cost to the End-user) the replacement Warranted Item to the End-user within one (1) business day after Company receives notice of the warranty claim. In such case, the End-user must return (at Company's expense) the defective Warranted Item to Company in the same packaging as the replacement Warranted Item received by the End-user or as otherwise instructed by Company. If Company does not receive the defective Warranted Item, Company will either charge the End-user's credit card, or send the End-user an invoice (which the End-user agrees to pay), for the value of the replacement product.

If the Warranted Item is to be replaced by Company, but the End-user is unwilling or unable to supply a credit card number or purchase order for the value of the replacement product, Company will use commercially reasonable business efforts to ship (via standard ground shipment and at no cost to the End-user) the replacement Warranted Item to the End-user within one (1) business day after Company receives the defective product from the End-user.

In any case, Company will provide shipping instructions and will pay its designated carrier for all shipping charges for return of defective equipment and replacement of Warranted Items. Any returned Warranted Item or parts that are replaced may be new or reconditioned. All Warranted Items returned to Company and all parts replaced by Company shall become the property of Company.

WHAT THIS LIMITED WARRANTY DOES NOT COVER: This Warranty does not cover any defects or damages caused by: (a) failure to properly store the Product before installation, including the charge of batteries no later than the date indicated on the packaging; (b) shipping and delivery of the Product if shipping is FOB Factory; (c) neglect, accident, abuse, misuse, misapplication or incorrect installation; (d) repair or alteration not authorized in writing by Company personnel or performed by an authorized Company Customer Service Engineer or Agent; (e) improper testing, operation, maintenance, adjustment or modification of any kind not authorized in writing by Company personnel or performed by an authorized Company Customer Service Engineer or Agent; or (f) use of the Product under other than normal operating conditions or in a manner inconsistent with the Product's labels or instructions.

This Warranty is not valid if the Product's serial numbers have been removed or are illegible. Any Warranted Items repaired or replaced pursuant to this Warranty will be warranted for the remaining portion of the original Warranty subject to all the terms thereof.

Company shall not be responsible for any charges for testing, checking, removal or installation of Warranted Items.

WARRANTY

Two-Year Limited Warranty (*continued)*

COMPANY DOES NOT WARRANT EQUIPMENT NOT MANUFACTURED BY COMPANY. IF PERMITTED BY THE APPLICABLE MANUFACTURER, COMPANY SHALL PASS THROUGH SUCH MANUFACTURER'S WARRANTIES TO END-USER.

COMPANY DOES NOT WARRANT SOFTWARE, INCLUDING SOFTWARE EMBEDDED IN PRODUCTS, THAT IS NOT CREATED BY COMPANY. WITHOUT LIMITING THE FOREGOING, COMPANY SPECIFICALLY DOES NOT WARRANT SOFTWARE (SUCH AS LINUX) THAT WAS CREATED USING AN "OPEN SOURCE" MODEL OR IS DISTRIBUTED PURSUANT TO AN OPEN SOURCE LICENSE.

THIS WARRANTY IS THE SOLE AND EXCLUSIVE WARRANTY OFFERED BY COMPANY WITH RESPECT TO THE PRODUCTS AND SERVICES AND, EXCEPT FOR SUCH FOREGOING WARRANTY COMPANY DISCLAIMS ALL OTHER WARRANTIES INCLUDING BUT NOT LIMITED TO ANY IMPLIED WARRANTIES OF MERCHANTABILITY, TITLE, NON-INFRINGEMENT AND FITNESS FOR A PARTICULAR PURPOSE. CORRECTION OF NON-CONFORMITIES IN THE MANNER AND FOR THE PERIOD OF TIME PROVIDED ABOVE SHALL CONSTITUTE COMPANY'S SOLE LIABILITY AND END-USER'S EXCLUSIVE REMEDY FOR FAILURE OF COMPANY TO MEET ITS WARRANTY OBLIGATIONS, WHETHER CLAIMS OF THE END-USER ARE BASED IN CONTRACT, IN TORT (INCLUDING NEGLIGENCE OR STRICT LIABILITY), OR OTHERWISE.

LIMITATION OF LIABILITY: The remedies of the End-user set forth herein are exclusive and are the sole remedies for any failure of Company to comply with its obligations hereunder. In no event shall Company be liable in contract, in tort (including negligence or strict liability) or otherwise for damage to property or equipment other than the Products, including loss of profits or revenue, loss of use of Products, loss of data, cost of capital, claims of customers of the End-user or any special, indirect, incidental or consequential damages whatsoever. The total cumulative liability of Company hereunder whether the claims are based in contract (including indemnity), in tort (including negligence or strict liability) or otherwise, shall not exceed the price of the Product on which such liability is based.

Company shall not be responsible for failure to provide service or parts due to causes beyond Company's reasonable control.

END-USER'S OBLIGATIONS: In order to receive the benefits of this Warranty, the End-user must use the Product in a normal way; follow the Product's operation and maintenance manual; and protect against further damage to the Product if there is a covered defect.

OTHER LIMITATIONS: Company's obligations under this Warranty are expressly conditioned upon receipt by Company of all payments due to it (including interest charges, if any). During such time as Company has not received payment of any amount due to it for the Product, in accordance with the contract terms under which the Product is sold, Company shall have no obligation under this Warranty. Also during such time, the period of this Warranty shall continue to run and the expiration of this Warranty shall not be extended upon payment of any overdue or unpaid amounts.

COSTS NOT RELATED TO WARRANTY: The End-user shall be invoiced for, and shall pay for, all services not expressly provided for by the terms of this Warranty, including without limitation, site calls involving an inspection that determines no corrective maintenance is required. Any costs for replacement equipment, installation, materials, freight charges, travel expenses or labor of Company representatives outside the terms of this Warranty will be borne by the End-user.

OBTAINING WARRANTY SERVICE: In the USA, call the Customer Reliability Center 7x24 at 800.356.5737. Outside of the USA, contact your local Eaton product sales or service representative for units purchased from those countries, or call the Customer Reliability Center in the USA at 919.845.3683 for units purchased in the USA that were shipped overseas. For comments or questions about this Warranty, write to the Customer Quality Representative, 8609 Six Forks Road, Raleigh, North Carolina 27615 USA.

WARRANTY
Limited Warranty (Global)

UPS MODEL: BLADEUPS

WARRANTOR: The warrantor for the limited warranties set forth herein is Eaton ("Eaton").

LIMITED WARRANTY: This limited warranty (this "Warranty") applies only to the original Purchaser (the "End-user") of any BladeUPS Products (individually and collectively, the "Product") purchased and registered with Eaton and cannot be transferred. This restriction applies even in the event that the Product is initially sold by Eaton for resale to an End-user. This Warranty gives you specific legal rights, and you may also have other rights which vary from State to State (or jurisdiction to jurisdiction).

LIMITED WARRANTY PERIOD: The period covered by this Warranty for the Product is eighteen (18) months from date of Product shipment.

WHAT THIS LIMITED WARRANTY COVERS: Eaton warrants that the Product and battery (individually and collectively, the "Warranted Items") are free of defects in material and workmanship. If, in the opinion of Eaton, a Warranted Item is defective and the defect is within the terms of this Warranty, Eaton's sole obligation will be to repair or replace such defective Warranted Item (including providing service, parts and labor, as applicable), at the option of Eaton.

PROCEDURES FOR REPAIR OR REPLACEMENT OF WARRANTED ITEMS: The Warranted Item will be repaired or replaced at an Eaton site or such other location as determined by Eaton.

If the Warranted Item is to be replaced by Eaton, and the End-user supplies a credit card number or purchase order for the value of the replacement product, Eaton will use commercially reasonable business efforts to ship (via standard ground shipment and at no cost to the End-user) the replacement Warranted Item to the End-user within one (1) business day after Eaton receives notice of the warranty claim. In such case, the End-user must return (at Eaton's expense) the defective Warranted Item to Eaton in the same packaging as the replacement Warranted Item received by the End-user or as otherwise instructed by Eaton. If Eaton does not receive the defective Warranted Item, Eaton will either charge the End-user's credit card, or send the End-user an invoice (which the End-user agrees to pay), for the value of the replacement product.

If the Warranted Item is to be replaced by Eaton, but the End-user is unwilling or unable to supply a credit card number or purchase order for the value of the replacement product, Eaton will use commercially reasonable business efforts to ship (via standard ground shipment and at no cost to the End-user) the replacement Warranted Item to the End-user within one (1) business day after Eaton receives the defective product from the End-user.

In any case, Eaton will provide shipping instructions and will pay its designated carrier for all shipping charges for return of defective equipment and replacement of Warranted Items. Any returned Warranted Item or parts that are replaced may be new or re-conditioned. All Warranted Items returned to Eaton and, in any replacement endeavor, all parts removed by Eaton shall become the property of Eaton.

WHAT THIS LIMITED WARRANTY DOES NOT COVER: This Warranty does not cover any defects or damages caused by: (a) failure to properly store the Product before installation, including the charge of batteries no later than the date indicated on the packaging; (b) shipping and delivery of the Product if shipping is FOB Factory; (c) damage caused by fire, flood, lightning, vandalism, acts of God, End-user's neglect, misuse, misapplication, incorrect connection or external damage; or that has been subject to repair or alteration by End-user (or a third party) not authorized by Eaton in writing; (d) repair or alteration not performed by an authorized Eaton Customer Service Engineer or Agent; (e) improper testing, operation, maintenance, adjustment or modification of any kind not authorized in writing by Eaton personnel or performed by an authorized Eaton Customer Service Engineer or Agent; or (f) use of the Product under other than normal operating conditions or in a manner inconsistent with the Product's labels or instructions.

This Warranty is not valid if the Product's serial numbers have been removed or are illegible. Any Warranted Items repaired or replaced pursuant to this Warranty will be warranted for the remaining portion of the original Warranty subject to all the terms thereof.

Eaton shall not be responsible for any charges for testing, checking, removal or installation of Warranted Items.

EATON DOES NOT WARRANT EQUIPMENT NOT MANUFACTURED BY EATON. IF PERMITTED BY THE APPLICABLE MANUFACTURER, EATON SHALL PASS THROUGH SUCH MANUFACTURER'S WARRANTIES TO END-USER.

WARRANTY

Limited Warranty (Global) *(continued)*

EATON DOES NOT WARRANT SOFTWARE, INCLUDING SOFTWARE EMBEDDED IN PRODUCTS, THAT IS NOT CREATED BY EATON. WITHOUT LIMITING THE FOREGOING, EATON SPECIFICALLY DOES NOT WARRANT SOFTWARE (SUCH AS LINUX) THAT WAS CREATED USING AN "OPEN SOURCE" MODEL OR IS DISTRIBUTED PURSUANT TO AN OPEN SOURCE LICENSE.

THIS WARRANTY IS THE SOLE AND EXCLUSIVE WARRANTY OFFERED BY EATON WITH RESPECT TO THE PRODUCTS AND SERVICES AND, EXCEPT FOR SUCH FOREGOING WARRANTY EATON DISCLAIMS ALL OTHER WARRANTIES INCLUDING BUT NOT LIMITED TO ANY IMPLIED WARRANTIES OF MERCHANTABILITY, TITLE, NON-INFRINGEMENT AND FITNESS FOR A PARTICULAR PURPOSE. CORRECTION OF NON-CONFORMITIES IN THE MANNER AND FOR THE PERIOD OF TIME PROVIDED ABOVE SHALL CONSTITUTE EATON'S SOLE LIABILITY AND END-USER'S EXCLUSIVE REMEDY FOR FAILURE OF EATON TO MEET ITS WARRANTY OBLIGATIONS, WHETHER CLAIMS OF THE END-USER ARE BASED IN CONTRACT, IN TORT (INCLUDING NEGLIGENCE OR STRICT LIABILITY) OR OTHERWISE. SOME STATES OR JURISDICTIONS DO NOT ALLOW THE EXCLUSION OF EXPRESS OR IMPLIED WARRANTIES, SO THE ABOVE EXCLUSION MAY NOT APPLY TO YOU. IN THAT EVENT, SUCH WARRANTIES ARE LIMITED IN DURATION TO THE LIMITED WARRANTY PERIOD. SOME STATES OR JURISDICTIONS DO NOT ALLOW LIMITATIONS ON HOW LONG AN IMPLIED WARRANTY LASTS OR THE EXCLUSION OR LIMITATION OF INCIDENTAL OR CONSEQUENTIAL DAMAGES, SO THE ABOVE LIMITATIONS AND/OR EXCLUSIONS MAY NOT APPLY TO YOU.

LIMITATION OF LIABILITY: The remedies of the End-user set forth herein are exclusive and are the sole remedies for any failure of Eaton to comply with its obligations hereunder. In no event shall Eaton be liable for any indirect, incidental, special or consequential damages of any kind or type whatsoever, resulting from or in connection with any claim or cause of action, whether brought in contract or in tort (including negligence or strict liability). Some States or jurisdictions do not allow the exclusion of limitation of incidental or consequential damages, so the above limitation or exclusion may not apply to you. Eaton shall not be responsible for failure to provide service or parts due to causes beyond Eaton's reasonable control. In no case will Eaton's liability under this Warranty exceed the replacement value of the Warranted Items.

END-USER'S OBLIGATIONS: In order to receive the benefits of this Warranty, the End-user must register the product warranty (via mail or online at www.eaton.com/powerquality "warranty registration"); use the Product in a normal way; follow the Product's operation and maintenance manual; and protect against further damage to the Product if there is a covered defect.

OTHER LIMITATIONS: Eaton's obligations under this Warranty are expressly conditioned upon receipt by Eaton of all payments due from End-user (including interest charges, if any). During such time as Eaton has not received payment of any amount due to it for the Product, in accordance with the contract terms under which the Product is sold, Eaton shall have no obligation under this Warranty. Also during such time, the period of this Warranty shall continue to run and the expiration of this Warranty shall not be extended upon payment of any overdue or unpaid amounts.

COSTS NOT RELATED TO WARRANTY: The End-user shall be invoiced for, and shall pay for, all services not expressly provided for by the terms of this Warranty, including without limitation, site calls involving an inspection that determines no corrective maintenance is required. Any costs for replacement equipment, installation, materials, freight charges, travel expenses or labor of Eaton representatives outside the terms of this Warranty will be borne by the End-User.

OBTAINING WARRANTY SERVICE: In the USA, call the Customer Reliability Center 7x24 at 800.356.5737. Outside of the USA, contact your local Eaton product sales or service representative for units purchased from those countries, or call the Customer Reliability Center in the USA at 919.845.3683 for units purchased in the USA that were shipped overseas. For comments or questions about this Warranty, write to the Customer Quality Representative, 8609 Six Forks Road, Raleigh, North Carolina 27615 USA.

WARRANTY

Two-Year Limited Warranty (USA and Canada)

CONNECTIVITY DEVICES

WARRANTOR: The warrantor for the limited warranties set forth herein is Eaton ("Company").

LIMITED WARRANTY: This limited warranty (this "Warranty") applies only to the original End-user (the "End-user") of any 3, 5 and 9 series Connectivity Devices (the "Product") purchased on or after June 1, 2004, and cannot be transferred. This Warranty applies even in the event that the Product is initially sold by Company for resale to an End-user.

LIMITED WARRANTY PERIOD: The period covered by this Warranty for the Product installed [and currently located] in the fifty (50) United States, the District of Columbia, and Canada is twenty-four (24) months from the date of purchase.

WHAT THIS LIMITED WARRANTY COVERS: The warrantor warrants that the Product (the "Warranted Item") is free from defects in material and workmanship. If, in the opinion of Company, a Warranted Item is defective and the defect is within the terms of this Warranty, Company's sole obligation will be to repair or replace such defective Warranted Item (including by providing service, parts and labor, as applicable), at the option of Company.

PROCEDURES FOR REPAIR OR REPLACEMENT OF WARRANTED ITEMS: The Warranted Item will be repaired or replaced at a Company site or such other location as determined by Company.

If the Warranted Item is to be replaced by Company, and the End-user supplies a credit card number or purchase order for the value of the replacement Product, Company will use commercially reasonable business efforts to ship (via standard ground shipment and at no cost to the End-user) the replacement Warranted Item to the End-user within one (1) business day after Company receives notice of the warranty claim. In such case, the End-user must return (at Company's expense) the defective Warranted Item to Company in the same packaging as the replacement Warranted Item received by the End-user or as otherwise instructed by Company. If Company does not receive the defective Warranted Item, Company will either charge the End-user's credit card, or send the End-User an invoice (which the End-user agrees to pay), for the value of the replacement Product.

If the Warranted Item is to be replaced by Company, but the End-user is unwilling or unable to supply a credit card number or purchase order for the value of the replacement Product, Company will use commercially reasonable business efforts to ship (via standard ground shipment and at no cost to the End-user) the replacement Warranted Item to the End-user within one (1) business day after Company receives the defective Product from the End-user.

In any case, Company will provide shipping instructions and will pay its designated carrier for all shipping charges for return of defective equipment and replacement of Warranted Items. Any returned Warranted Item or parts that are replaced may be new or reconditioned. All Warranted Items returned to Company and all parts replaced by Company shall become the property of Company.

WHAT THIS LIMITED WARRANTY DOES NOT COVER: This Warranty does not cover any defects or damages caused by: (a) failure to properly store the Product before installation; (b) shipping and delivery of the Product if shipping is FOB Factory; (c) neglect, accident, abuse, misuse, misapplication or incorrect installation; (d) repair or alteration not authorized in writing by Company personnel or performed by an authorized Company Customer Service Engineer or Agent; (e) improper testing, operation, maintenance, adjustment or modification of any kind not authorized in writing by Company personnel or performed by an authorized Company Customer Service Engineer or Agent; or (f) use of the Product under other than normal operating conditions or in a manner inconsistent with the Product's labels or instructions.

This Warranty is not valid if the Product's serial numbers have been removed or are illegible. Any Warranted Items repaired or replaced pursuant to this Warranty will be warranted for the remaining portion of the original Warranty subject to all the terms thereof.

Company shall not be responsible for any charges for testing, checking, removal or installation of Warranted Items.

COMPANY DOES NOT WARRANT EQUIPMENT NOT MANUFACTURED BY COMPANY. IF PERMITTED BY THE APPLICABLE MANUFACTURER,

COMPANY SHALL PASS THROUGH SUCH MANUFACTURER'S WARRANTIES TO END-USER.
COMPANY DOES NOT WARRANT SOFTWARE (IF APPLICABLE TO THE PRODUCT), INCLUDING SOFTWARE EMBEDDED IN PRODUCTS, THAT IS NOT CREATED BY COMPANY. WITHOUT LIMITING THE FOREGOING, COMPANY SPECIFICALLY DOES NOT WARRANT SOFTWARE (SUCH AS LINUX) THAT WAS CREATED USING AN "OPEN SOURCE" MODEL OR IS DISTRIBUTED PURSUANT TO AN OPEN SOURCE LICENSE.

WARRANTY

Two-Year Limited Warranty (USA and Canada) *(continued)*

COMPANY DOES NOT WARRANT SOFTWARE (IF APPLICABLE TO THE PRODUCT), INCLUDING SOFTWARE EMBEDDED IN PRODUCTS, THAT IS NOT CREATED BY COMPANY. WITHOUT LIMITING THE FOREGOING, COMPANY SPECIFICALLY DOES NOT WARRANT SOFTWARE (SUCH AS LINUX) THAT WAS CREATED USING AN "OPEN SOURCE" MODEL OR IS DISTRIBUTED PURSUANT TO AN OPEN SOURCE LICENSE.

THIS WARRANTY IS THE SOLE AND EXCLUSIVE WARRANTY OFFERED BY COMPANY WITH RESPECT TO THE PRODUCTS AND SERVICES AND, EXCEPT FOR SUCH FOREGOING WARRANTY COMPANY DISCLAIMS ALL OTHER WARRANTIES INCLUDING BUT NOT LIMITED TO ANY IMPLIED WARRANTIES OF MERCHANTABILITY, TITLE, NON-INFRINGEMENT, AND FITNESS FOR A PARTICULAR PURPOSE. CORRECTION OF NON-CONFORMITIES IN THE MANNER AND FOR THE PERIOD OF TIME PROVIDED ABOVE SHALL CONSTITUTE COMPANY'S SOLE LIABILITY AND END-USER'S EXCLUSIVE REMEDY FOR FAILURE OF COMPANY TO MEET ITS WARRANTY OBLIGATIONS, WHETHER CLAIMS OF THE END-USER ARE BASED IN CONTRACT, IN TORT (INCLUDING NEGLIGENCE OR STRICT LIABILITY), OR OTHERWISE.

LIMITATION OF LIABILITY: The remedies of the End-user set forth herein are exclusive and are the sole remedies for any failure of Company to comply with its obligations hereunder. In no event shall Company be liable in contract, in tort (including negligence or strict liability) or otherwise for damage to property or equipment other than the Products, including loss of profits or revenue, loss of use of Products, loss of data, cost of capital, claims of customers of the End-user or any special, indirect, incidental or consequential damages whatsoever. The total cumulative liability of Company hereunder whether the claims are based in contract (including indemnity), in tort (including negligence or strict liability) or otherwise, shall not exceed the price of the Product on which such liability is based.

Company shall not be responsible for failure to provide service or parts due to causes beyond Company's reasonable control.

END-USER'S OBLIGATIONS: In order to receive the benefits of this Warranty, the End-user must use the Product in a normal way; follow the Product's user's guide; and protect against further damage to the Product if there is a covered defect.

OTHER LIMITATIONS: Company's obligations under this Warranty are expressly conditioned upon receipt by Company of all payments due to it (including interest charges, if any). During such time as Company has not received payment of any amount due to it for the Product, in accordance with the contract terms under which the Product is sold, Company shall have no obligation under this Warranty. Also during such time, the period of this Warranty shall continue to run and the expiration of this Warranty shall not be extended upon payment of any overdue or unpaid amounts.

COSTS NOT RELATED TO WARRANTY: The End-User shall be invoiced for, and shall pay for, all services not expressly provided for by the terms of this Warranty, including without limitation, site calls involving an inspection that determines no corrective maintenance is required. Any costs for replacement equipment, installation, materials, freight charges, travel expenses or labor of Company representatives outside the terms of this Warranty will be borne by the End-User.

OBTAINING WARRANTY SERVICE: In the USA, call the Customer Reliability Center 7x24 at 800.843.9433. Outside of the USA, contact your local Eaton product sales or service representative for units purchased from those countries, or call the Customer Reliability Center in the USA at 919.845.3633 for units purchased in the USA that were shipped overseas. For comments or questions about this Warranty, write to the Customer Quality Representative, 8609 Six Forks Road, Raleigh, North Carolina 27615 USA.

WARRANTY
Limited Warranty (USA and Canada)

EPDU ENCLOSURE POWER DISTRIBUTION UNITS

WARRANTOR: The warrantor for the limited warranties set forth herein is Eaton ("Company").

RACKMOUNTED LIMITED WARRANTY: This limited warranty (this "Warranty") applies only to the original End-user (the "End-user") of any Eaton Rackmounted Power Distribution Units (the "Product") purchased on or after July 1, 2012, and cannot be transferred. This Warranty applies even in the event that the Product is initially sold by Company for resale to an End-user.

LIMITED WARRANTY PERIOD: The period covered by this Warranty for Product installed [and currently located] in the fifty (50) United States, the District of Columbia and Canada is twenty-four (24) months from the date of purchase, or thirty (30) months from the date of shipment. For units that are registered online at www.eaton.com/PQ/Register, the warranty is extended to thirty-six (36) months from the date of purchase, or fortytwo (42) months from the date of shipment.

WHAT THIS LIMITED WARRANTY COVERS: The warrantor warrants that the Product (the "Warranted Item") is free from defects in material and workmanship. If, in the opinion of Company, a Warranted Item is defective and the defect is within the terms of this Warranty, Company's sole obligation will be to repair or replace such defective Warranted Item (including by providing service, parts and labor, as applicable), at the option of Company.

PROCEDURES FOR REPAIR OR REPLACEMENT OF WARRANTED ITEMS:
Standard Product: Defined as ePDU product with the product number sequence PWxxxxxxxxxx or eXXXXX, (whereas x can be any value). The Warranted item will be repaired or replaced by the Company.

Custom Product: Defined as ePDU product with any product number sequence that does not equal a standard product as noted above. The Warranted item will be repaired at a Company site or such other location as determined by Company.

If the Warranted Item is to be replaced by Company, and the End-user supplies a credit card number or purchase order for the value of the replacement Product, Company will use commercially reasonable business efforts to ship (via standard ground shipment and at no cost to the End-user) the replacement Warranted Item to the End-user within one (1) business day after Company receives notice of the warranty claim. In such case, the End-user must return (at Company's expense) the defective Warranted Item to Company in the same packaging as the replacement Warranted Item received by the End-user or as otherwise instructed by Company. If Company does not receive the defective Warranted Item, Company will either charge the End-user's credit card, or send the End-user an invoice (which the End-user agrees to pay), for the value of the replacement Product.

If the Warranted Item is to be replaced by Company, but the End-user is unwilling or unable to supply a credit card number or purchase order for the value of the replacement Product, Company will use commercially reasonable business efforts to ship (via standard ground shipment and at no cost to the End-user) the replacement Warranted Item to the End-user within one (1) business day after Company receives the defective Product from the End-user.

In any case, Company will provide shipping instructions and will pay its designated carrier for all shipping charges for return of defective equipment and replacement of Warranted Items. Any returned Warranted Item or parts that are replaced may be new or reconditioned. All Warranted Items returned to Company and all parts replaced by Company shall become the property of Company.

WHAT THIS LIMITED WARRANTY DOES NOT COVER: This Warranty does not cover any defects or damages caused by: (a) failure to properly store the Product before installation; (b) shipping and delivery of the Product if shipping is FOB Factory; (c) neglect, accident, abuse, misuse, misapplication or incorrect installation; (d) repair or alteration not authorized in writing by Company personnel or performed by an authorized Company Customer Service Engineer or Agent; (e) improper testing, operation, maintenance, adjustment or modification of any kind not authorized in writing by Company personnel or performed by an authorized Company Customer Service Engineer or Agent; or (f) use of the Product under other than normal operating conditions or in a manner inconsistent with the Product's labels or instructions.

This Warranty is not valid if the Product's serial numbers have been removed or are illegible. Any Warranted Items repaired or replaced pursuant to this Warranty will be warranted for the remaining portion of the original Warranty subject to all the terms thereof.

Company shall not be responsible for any charges for testing, checking, removal or installation of Warranted Items.

WARRANTY

Two-Year Limited Warranty (USA and Canada) *(continued)*

COMPANY DOES NOT WARRANT EQUIPMENT NOT MANUFACTURED BY COMPANY. IF PERMITTED BY THE APPLICABLE MANUFACTURER, COMPANY SHALL PASS THROUGH SUCH MANUFACTURER'S WARRANTIES TO END-USER.

COMPANY DOES NOT WARRANT SOFTWARE (IF APPLICABLE TO THE PRODUCT), INCLUDING SOFTWARE EMBEDDED IN PRODUCTS, THAT IS NOT CREATED BY COMPANY. WITHOUT LIMITING THE FOREGOING, COMPANY SPECIFICALLY DOES NOT WARRANT SOFTWARE (SUCH AS LINUX) THAT WAS CREATED USING AN "OPEN SOURCE" MODEL OR IS DISTRIBUTED PURSUANT TO AN OPEN SOURCE LICENSE.

THIS WARRANTY IS THE SOLE AND EXCLUSIVE WARRANTY OFFERED BY COMPANY WITH RESPECT TO THE PRODUCTS AND SERVICES AND, EXCEPT FOR SUCH FOREGOING WARRANTY COMPANY DISCLAIMS ALL OTHER WARRANTIES INCLUDING BUT NOT LIMITED TO ANY IMPLIED WARRANTIES OF MERCHANTABILITY, TITLE, NON-INFRINGEMENT AND FITNESS FOR A PARTICULAR PURPOSE. CORRECTION OF NON-CONFORMITIES IN THE MANNER AND FOR THE PERIOD OF TIME PROVIDED ABOVE SHALL CONSTITUTE COMPANY'S SOLE LIABILITY AND END-USER'S EXCLUSIVE REMEDY FOR FAILURE OF COMPANY TO MEET ITS WARRANTY OBLIGATIONS, WHETHER CLAIMS OF THE END-USER ARE BASED IN CONTRACT, IN TORT (INCLUDING NEGLIGENCE OR STRICT LIABILITY), OR OTHERWISE.

LIMITATION OF LIABILITY: The remedies of the End-user set forth herein are exclusive and are the sole remedies for any failure of Company to comply with its obligations hereunder. In no event shall Company be liable in contract, in tort (including negligence or strict liability) or otherwise for damage to property or equipment other than the Products, including loss of profits or revenue, loss of use of Products, loss of data, cost of capital, claims of customers of the End-user or any special, indirect, incidental or consequential damages whatsoever. The total cumulative liability of Company hereunder whether the claims are based in contract (including indemnity), in tort (including negligence or strict liability) or otherwise, shall not exceed the price of the Product on which such liability is based.

Company shall not be responsible for failure to provide service or parts due to causes beyond Company's reasonable control.

END-USER'S OBLIGATIONS: In order to receive the benefits of this Warranty, the End-user must use the Product in a normal way; follow the Product's user's guide; and protect against further damage to the Product if there is a covered defect.

OTHER LIMITATIONS: Company's obligations under this Warranty are expressly conditioned upon receipt by Company of all payments due to it (including interest charges, if any). During such time as Company has not received payment of any amount due to it for the Product, in accordance with the contract terms under which the Product is sold, Company shall have no obligation under this Warranty. Also during such time, the period of this Warranty shall continue to run and the expiration of this Warranty shall not be extended upon payment of any overdue or unpaid amounts.

COSTS NOT RELATED TO WARRANTY: The End-user shall be invoiced for, and shall pay for, all services not expressly provided for by the terms of this Warranty, including without limitation, site calls involving an inspection that determines no corrective maintenance is required. Any costs for replacement equipment, installation, materials, freight charges, travel expenses or labor of Company representatives outside the terms of this Warranty will be borne by the End-user.

OBTAINING WARRANTY SERVICE: In the USA, call the Customer Reliability Center 7x24 at 800.356.5737. Outside of the USA, contact your local Eaton product sales or service representative for units purchased from those countries, or call the Customer Reliability Center in the USA at 919.845.3683 for units purchased in the USA that were shipped overseas. For comments or questions about this Warranty, write to the Customer Quality Representative, 8609 Six Forks Road, Raleigh, North Carolina 27615 USA.

WARRANTY

Limited Factory Warranty For Eaton Three-phase UPS Products

THREE-PHASE PRODUCTS

WARRANTOR: The warrantor for the limited warranties set forth herein is Eaton ("Eaton").

LIMITED WARRANTY: This limited warranty (this "Warranty") applies only to the original End-user (the "End-user") of the Eaton three-phase UPS Products (the "Product") and cannot be transferred. This Warranty applies even in the event that the Product is initially sold by Eaton for resale to an End-user.

LIMITED WARRANTY PERIOD: The period covered by this Warranty for Product installed [and currently located] in the fifty (50) United States and the District of Columbia is twelve (12) months from the date of Product startup or eighteen (18) months from date of Product shipment, whichever occurs first, for parts coverage and 90 days from the date of Product startup for labor coverage. The period covered by this Warranty for Product installed [and currently located] outside of the fifty (50) United States and the District of Columbia is twelve (12) months from the date of Product startup or eighteen (18) months from date of Product shipment, whichever occurs first, for parts coverage.

WHAT THIS LIMITED WARRANTY COVERS: The warrantor warrants that the Eaton three-phase UPS electronics, Eaton-built accessories, and Eaton-built battery cabinets, (individually and collectively, the "Warranted Items") are free from defects in material and workmanship. If, in the opinion of Eaton, a Warranted Item is defective and the defect is within the terms of this Warranty, Eaton's sole obligation will be to repair or replace such defective item (including by providing service, parts and labor, as applicable), at the option of Eaton. The Warranted Item will be repaired or replaced onsite at the End-user's location or such other location as determined by Eaton. Any parts that are replaced may be new or reconditioned. All parts replaced by Eaton shall become the property of Eaton.

WHAT THIS LIMITED WARRANTY DOES NOT COVER: This Warranty does not cover any defects or damages caused by: (a) failure to properly store the Product before installation, including the "trickle charge" of batteries no later than the date indicated on the packaging; (b) shipping and delivery of the Product if shipping is FOB Factory; (c) neglect, accident, fire, flood, lightning, vandalism, acts of God, Customer's neglect, abuse, misuse, misapplication, incorrect installation; (d) repair or alteration, not authorized in writing by Eaton personnel or performed by an authorized Eaton Customer Service Engineer or Agent; or (e) improper testing, operation, maintenance, adjustment or any modification of any kind not authorized in writing by Eaton personnel or performed by an authorized Eaton Customer Service Engineer or Agent.

This Warranty is not valid: (a) unless an authorized Eaton Customer Service Engineer (in USA) or Agent (outside of USA) performs startup and commissioning of the Product; (b) if the Product is moved to a new location by someone other than an authorized Eaton Customer Service Engineer (in USA) or Agent (outside of USA); or (c) if the Product's serial numbers have been removed or are illegible. Any Warranted Items repaired or replaced pursuant to this Warranty will be warranted for the remaining portion of the original Warranty subject to all the terms thereof. Labor warranty is not provided for Product located outside of the fifty (50) United States or the District of Columbia. Any equipment, parts or materials included in the Product and not manufactured by Eaton are warranted solely by the manufacturer of such equipment, parts or materials and are not included as part of this warranty. Batteries are not warranted by Eaton.

THIS WARRANTY IS THE END-USER'S SOLE REMEDY AND IS EXPRESSLY IN LIEU OF, AND THERE ARE NO OTHER, EXPRESSED OR IMPLIED GUARANTEES OR WARRANTIES (INCLUDING ANY IMPLIED WARRANTY OF MERCHANTABILITY OR FITNESS FOR ANY PURPOSE, WHICH ARE EXPRESSLY DISCLAIMED).

LIMITATION OF LIABILITY: In no event shall Eaton be liable for any indirect, incidental, special or consequential damages of any kind or type whatsoever, or based on any claim or cause of action, however denominated. Eaton shall not be responsible for failure to provide service or parts due to causes beyond Eaton's reasonable control. In no case will Eaton's liability under this Warranty exceed the replacement value of the Warranted Items.

END-USER'S OBLIGATIONS: In order to receive the benefits of this Warranty, the End-user must use the Product in a normal way; follow the Product's operators and maintenance manual; and protect against further damage to the Product if there is a covered defect.

OTHER LIMITATIONS: Eaton's obligations under this Warranty are expressly conditioned upon receipt by Eaton of all payments due to it (including interest charges, if any). During such time as Eaton has not received payment of any amount due to it for the Product, in accordance with the contract terms under which the Product is sold, Eaton shall have no obligation under this Warranty. Also during such time, the period of this Warranty shall continue to run and the expiration of this Warranty shall not be extended upon payment of any overdue or unpaid amounts.

COSTS NOT RELATED TO WARRANTY: The End-user shall be invoiced for, and shall pay for, all services not expressly provided for by the terms of this Warranty, including without limitation, site calls involving an inspection that determines no corrective maintenance is required. Any costs for replacement equipment, installation, materials, freight charges, travel expenses or labor of Eaton representatives outside the terms of this Warranty will be borne by the End-user.

OBTAINING WARRANTY SERVICE: In the USA, call the Customer Reliability Center 7x24 at 800.843.9433. Outside of the USA, contact your local Eaton product sales or service representative for units purchased from those countries, or call the Customer Reliability Center in the USA at 919.845.3633 for units purchased in the USA that were shipped overseas. For comments or questions about this Warranty, write to the Customer Quality Representative, 8609 Six Forks Road, Raleigh, North Carolina 27615 USA.

WARRANTY

Limited Factory Warranty For Eaton 9355 UPS Products

9355

WARRANTOR: The warrantor for the limited warranties set forth herein is Eaton Corporation, an Ohio Corporation ("Eaton").

LIMITED WARRANTY: This limited warranty (this "Warranty") applies only to the original End-user (the "End-user") of the 9355 UPS Products (the "Product") and cannot be transferred. This Warranty applies even in the event that the Product is initially sold by Eaton for resale to an End-user.

WHAT THIS LIMITED WARRANTY COVERS: The warrantor warrants, within the terms of this Warranty, that the Eaton three-phase UPS electronics, Eaton-built accessories and Eaton-built battery cabinets, (individually and collectively, the "Warranted Items") are free from defects in material and workmanship.

For Product installed (and currently located) in the fifty (50) United States and the District of Columbia, if, in the opinion of Eaton, a Warranted Item is defective, Eaton's sole obligation, at the option of Eaton, will be to refurbish or replace such defective Warranted Item (including the costs of providing diagnosis, service, and labor ["labor coverage"]). The defective Warranted Item will be refurbished or replaced onsite at the End-user's location or such other location as determined by Eaton. Any parts that are replaced may be new or reconditioned. All parts replaced by Eaton shall become the property of Eaton.

For Product installed (and currently located) outside the fifty (50) United States and the District of Columbia, if, in the opinion of Eaton, a Warranted Item is defective, Eaton's sole obligation, at the option of Eaton, will be to refurbish or replace such defective Warranted Item. (not including the costs of labor coverage). The defective Warranted Item will be refurbished or replaced onsite at the End-User's location or such other location as determined by Eaton. Any parts that are replaced may be new or reconditioned. All parts replaced by Eaton shall become the property of Eaton.

LIMITED WARRANTY PERIOD:
The period covered by this Warranty for Product installed (and currently located) in the fifty (50) United States and the District of Columbia is ninety (90) days from the date of Product purchase for labor coverage and twelve (12) months from the date of Product purchase or eighteen (18) months from date of Product shipment, whichever occurs first, for the refurbishment/replacement of parts.

The period covered by this Warranty for Product installed (and currently located) outside of the fifty (50) United States and the District of Columbia is twelve (12) months from the date of Product purchase or eighteen (18) months from date of Product shipment, whichever occurs first, for the refurbishment/replacement of parts.

WHAT THIS LIMITED WARRANTY DOES NOT COVER:
This Warranty does not cover any defects or damages caused by: (a) failure to properly store the Product before installation, including the "trickle charge" of batteries no later than the date indicated on the packaging; (b) shipping and delivery of the Product if shipping is FOB Factory; (c) neglect, accident, fire, flood, lightning, vandalism, acts of God, Customer's neglect, abuse, misuse, misapplication, incorrect installation; (d) repair or alteration, not authorized in writing by Eaton personnel or performed by an authorized Eaton Customer Service Engineer or Agent; or (e) improper testing, operation, maintenance, adjustment or any modification of any kind not authorized in writing by Eaton personnel or performed by an authorized Eaton Customer Service Engineer or Agent.

This Warranty is not valid: if the Product's serial numbers have been removed or are illegible. Any Warranted Items repaired or replaced pursuant to this Warranty will be warranted for the remaining portion of the original Warranty subject to all the terms thereof. Labor warranty is not provided for Product located outside of the fifty (50) United States or the District of Columbia. **Any equipment, parts or materials included in the Product and not manufactured by Eaton are warranted solely by the manufacturer of such equipment, parts or materials and are not included as part of this warranty. Batteries are not warranted by Eaton.**

THIS WARRANTY IS THE END-USER'S SOLE REMEDY AND IS EXPRESSLY IN LIEU OF, AND THERE ARE NO OTHER, EXPRESSED OR IMPLIED GUARANTEES OR WARRANTIES (INCLUDING ANY IMPLIED WARRANTY OF MERCHANTABILITY OR FITNESS FOR ANY PURPOSE, WHICH ARE EXPRESSLY DISCLAIMED).

LIMITATION OF LIABILITY: In no event shall Eaton be liable for any indirect, incidental, special or consequential damages of any kind or type whatsoever, or based on any claim or cause of action, however denominated. Eaton shall not be responsible for failure to provide service or parts due to causes beyond Eaton's reasonable control. In no case will Eaton's liability under this Warranty exceed the replacement value of the Warranted Items.

WARRANTY

Limited Factory Warranty For Eaton 9355 UPS Products *(continued)*

END-USER'S OBLIGATIONS: In order to receive the benefits of this Warranty, the End-user must register the product warranty (via mail or online at www.eaton.com/powerquality "product registration"); use the Product in a normal way; follow the Product's operators and maintenance manual; and protect against further damage to the Product if there is a covered defect.

OTHER LIMITATIONS: Eaton's obligations under this Warranty are expressly conditioned upon receipt by Eaton of all payments due to it (including interest charges, if any). During such time as Eaton has not received payment of any amount due to it for the Product, in accordance with the contract terms under which the Product is sold, Eaton shall have no obligation under this Warranty. Also during such time, the period of this Warranty shall continue to run and the expiration of this Warranty shall not be extended upon payment of any overdue or unpaid amounts.

COSTS NOT RELATED TO WARRANTY: The End-user shall be invoiced for, and shall pay for, all services not expressly provided for by the terms of this Warranty, including without limitation, site calls involving an inspection that determines no corrective maintenance is required. Any costs for replacement equipment, installation, materials, freight charges, travel expenses or labor of Eaton representatives outside the terms of this Warranty will be borne by the End-user.

OBTAINING WARRANTY SERVICE: In the USA, call the Customer Reliability Center 7x24 at 800.843.9433. Outside of the USA, contact your local Eaton product sales or service representative for units purchased from those countries, or call the Customer Reliability Center in the USA at 919.845.3633 for units purchased in the USA that were shipped overseas. For comments or questions about this Warranty, write to the Customer Quality Representative, 8609 Six Forks Road, Raleigh, North Carolina 27615 USA.

WARRANTY

Limited Factory Warranty For Eaton 93E UPS Products

93E

WARRANTOR: The warrantor for the limited warranties set forth herein is Eaton ("Eaton").

LIMITED WARRANTY: This limited warranty (this "Warranty") applies only to the original Purchaser (the "End-User") of the Eaton 93E UPS Products (the "Product") and cannot be transferred. This restriction applies even in the event that the Product is initially sold by Eaton for resale to an End-User. This Warranty gives you specific legal rights, and you may also have other rights which vary from State to State (or jurisdiction to jurisdiction).

WHAT THIS LIMITED WARRANTY COVERS: Eaton warrants, within the terms of this Warranty, that the Eaton three-phase UPS electronics, Eaton-built accessories, and Eaton-built battery cabinets, (individually and collectively, the"Warranted Items") are free from defects in material and workmanship.

For Product installed (and currently located) in the fifty (50) United States and the District of Columbia, if, in the opinion of Eaton, a Warranted Item is defective, Eaton's sole obligation, at the option of Eaton, will be to refurbish or replace such defective Warranted Item (including the costs of providing diagnosis, service, and labor ["labor coverage"]). The defective Warranted Item will be refurbished or replaced onsite at the End-User's location or such other location as determined by Eaton. Any parts that are replaced may be new or reconditioned. In any replacement endeavor, all parts removed by Eaton shall become the property of Eaton.

For Product installed (and currently located) outside the fifty (50) United States and the District of Columbia, if, in the opinion of Eaton, a Warranted Item is defective, Eaton's sole obligation, at the option of Eaton, will be to refurbish or replace such defective Warranted Item. (not including the costs of labor coverage). The defective Warranted Item will be refurbished or replaced onsite at the End-User's location or such other location as determined by Eaton. Any parts that are replaced may be new or reconditioned. In any replacement endeavor, all parts removed by Eaton shall become the property of Eaton.

LIMITED WARRANTY PERIOD: The period covered by this Warranty for Product installed (and currently located) in the fifty (50) United States and the District of Columbia is six (6) months from the date of Product purchase for labor coverage when no startup is performed by an authorized Eaton Customer Service Engineer or Agent or twelve (12) months from the date of Product purchase with startup performed by an authorized Eaton Customer Service Engineer or Agent and twelve (12) months from the date of Product purchase or eighteen (18) months from date of Product shipment, whichever occurs first, for the refurbishment/replacement of parts.

The period covered by this Warranty for Product installed (and currently located) outside of the fifty (50) United States and the District of Columbia is twelve (12) months from the date of Product purchase or eighteen (18) months from date of Product shipment, whichever occurs first, for the refurbishment/replacement of parts.

WHAT THIS LIMITED WARRANTY DOES NOT COVER: This Warranty does not cover any defects or damages caused by: (a) failure to properly store the Product before installation, including the "trickle charge" of batteries no later than the date indicated on the packaging; (b) shipping and delivery of the Product if shipping is FOB Factory; (c) neglect, accident, fire, flood, lightning, vandalism, acts of God, End-User's neglect, abuse, misuse, misapplication, incorrect installation; (d) repair or alteration, not authorized in writing by Eaton personnel or performed by an authorized Eaton Customer Service Engineer or Agent; or (e) improper testing, operation, maintenance, adjustment, or any modification of any kind not authorized in writing by Eaton personnel or performed by an authorized Eaton Customer Service Engineer or Agent.

This Warranty is not valid: if the Product's serial numbers have been removed or are illegible. Any Warranted Items repaired or replaced pursuant to this Warranty will be warranted for the remaining portion of the original Warranty subject to all the terms thereof. Eaton does not provide a labor warranty for Product located outside of the fifty (50) United States or the District of Columbia. Any equipment, parts or materials included in the Product and not manufactured by Eaton are warranted solely by the manufacturer of such equipment, parts or materials and are not included as part of this Warranty. Batteries are not warranted by Eaton.

THIS WARRANTY IS THE END-USER'S SOLE REMEDY AND IS EXPRESSLY IN LIEU OF, AND THERE ARE NO OTHER, EXPRESSED OR IMPLIED GUARANTEES OR WARRANTIES (INCLUDING ANY IMPLIED WARRANTY OF MERCHANTABILITY OR FITNESS FOR ANY PURPOSE, WHICH ARE EXPRESSLY DISCLAIMED). SOME STATES OR JURISDICTIONS DO NOT ALLOW THE EXCLUSION OF EXPRESS OR IMPLIED WARRANTIES, SO THE ABOVE EXCLUSION MAY NOT APPLY TO YOU. IN THAT EVENT, SUCH WARRANTIES ARE LIMITED IN DURATION TO THE LIMITED WARRANTY PERIOD. SOME STATES OR JURISDICTIONS DO NOT ALLOW LIMITATIONS ON HOW LONG AN IMPLIED WARRANTY LASTS OR THE EXCLUSION OR LIMITATION OF INCIDENTAL OR CONSEQUENTIAL DAMAGES, SO THE ABOVE LIMITATIONS AND/OR EXCLUSIONS MAY NOT APPLY TO YOU..

LIMITATION OF LIABILITY: In no event shall Eaton be liable for any indirect, incidental, special or consequential damages of any kind or type whatsoever, resulting from or in connection with any claim or cause of action, whether brought in contract or in tort (including negligence and strict liability). Some States or jurisdictions do not allow the exclusion of limitation of incidental or consequential damages, so the above limitation or exclusion may not apply to you. Eaton shall not be responsible for failure to provide service or parts due to causes beyond Eaton's reasonable control. In no case will Eaton's liability under this Warranty exceed the replacement value of the Warranted Items.

WARRANTY

Limited Factory Warranty For Eaton 93E UPS Products *(continued)*

END-USER'S OBLIGATIONS: In order to receive the benefits of this Warranty, the End-User must register the product warranty (via mail or online at www.powerquality.eaton.com/Product-Registration "product registration"); use the Product in a normal way; follow the Product's operators and maintenance manual; and protect against further damage to the Product if there is a covered defect.

OTHER LIMITATIONS: Eaton's obligations under this Warranty are expressly conditioned upon receipt by Eaton of all payments due from End-User (including interest charges, if any). During such time as Eaton has not received payment of any amount due to it for the Product, in accordance with the contract terms under which the Product is sold, Eaton shall have no obligation under this Warranty. Also during such time, the period of this Warranty shall continue to run and the expiration of this Warranty shall not be extended upon payment of any overdue or unpaid amounts.

COSTS NOT RELATED TO WARRANTY: The End-User shall be invoiced for, and shall pay for, all services not expressly provided for by the terms of this Warranty, including without limitation, site calls involving an inspection that determines no corrective maintenance is required. Any costs for replacement equipment, installation, materials, freight charges, travel expenses or labor of Eaton representatives outside the terms of this Warranty will be borne by the End-User.

OBTAINING WARRANTY SERVICE: In the USA, call the Customer Reliability Center 7x24 at 800.843.9433. Outside of the USA, contact your local Eaton product sales or service representative for units purchased from those countries, or call the Customer Reliability Center in the USA at 919.845.3633 for units purchased in the USA that were shipped overseas. For comments or questions about this Warranty, write to the Customer Quality Representative, 8609 Six Forks Road, Raleigh, North Carolina 27615 USA.

WARRANTY
Pulsar series

LIMITED WARRANTY & PROPRIETARY RIGHTS FOR PULSAR SERIES SINGLE-PHASE PRODUCTS (T-11)

STANDARD LIMITED WARRANTY FORM (APPLICABLE WITHIN THE UNITED STATES, CANADA AND LATIN AMERICA)

EATON STANDARD SINGLE-PHASE LIMITED WARRANTY
Eaton warrants single phase products manufactured by Eaton to be free from defects in materials and workmanship for the following applicable time periods beginning with the date of purchase by or for the first End-user ("Purchaser"):

The following products are covered by a one (1) year warranty period:

- Power-Sure 700 Power Conditioners

The following products are covered by a two (2) year warranty period:

- Nova AVR, Evolution, Evolution S, EX, MX, MX Frame and EX RT
- Power-Suppress 100 Ultra-Isolator Noise Suppressors and Power-Sure 800 Power Conditioners

The following products are covered by a three (3) year warranty period:

- Eclipse Personal

The following products are covered by a five (5) year warranty period:

- Power-Suppress T7

The following products are covered by a ten (10) year warranty period;

- Eclipse Pro and Eclipse ProTel

The terms and conditions of this standard limited warranty also apply to extended warranty coverage for the Pulsar series.

Any defects in materials or workmanship must be reported to Eaton within the applicable warranty period. Where labor is not included in the warranty, any labor performed by Eaton shall be billed to Purchaser at, and Purchaser agrees to pay, Eaton standard labor rates then in effect for all warranty work performed hereunder. Eaton shall have the sole right to determine if any defective parts are to be repaired at the job site or whether they are to be returned to the factory for repair or replacement. All items returned to Eaton for repair or replacement must be sent freight prepaid to its factory. Purchaser must obtain Eaton Return Materials Authorization ("RMA") prior to returning items. The conditions stated herein must be met for Eaton warranty to be valid. Eaton will not be liable for any damage done by unauthorized repair work, unauthorized replacement parts, from any misapplication of the subject product, for damage due to accident, abuse or act of God (such as earthquake, flood, inclement weather, rain or fire), or relating to Purchaser's failure to follow proper environmental conditions for the product.

In no event shall Eaton be liable for loss, damage, or expense directly or indirectly arising from the use of or any defects in the subject product, or from any other cause, except as expressly stated in this warranty. EXCEPT AS EXPRESSLY STATED IN THIS WARRANTY, EATON MAKES NO WARRANTIES, EXPRESS OR IMPLIED, INCLUDING ANY WARRANTY AS TO MERCHANTABILITY OR FITNESS FOR A PARTICULAR PURPOSE OR USE OR NON-INFRINGEMENT. SOME STATES OR JURISDICTIONS DO NOT ALLOW THE EXCLUSION OF EXPRESS OR IMPLIED WARRANTIES, SO THE ABOVE EXCLUSION MAY NOT APPLY TO YOU. IN THAT EVENT, SUCH WARRANTIES ARE LIMITED IN DURATION TO THE LIMITED WARRANTY PERIOD. SOME STATES OR JURISDICTIONS DO NOT ALLOW LIMITATIONS ON HOW LONG AN IMPLIED WARRANTY LASTS OR THE EXCLUSION OR LIMITATION OF INCIDENTAL OR CONSEQUENTIAL DAMAGES, SO THE ABOVE LIMITATIONS AND/OR EXCLUSIONS MAY NOT APPLY TO YOU.

Eaton is not liable for and Purchaser waives any right of action it has or may have against Eaton for any consequential or special damages arising out of any breach of warranty, and for any damages Purchaser may claim for damage to any property or injury or death to any person arising out of its purchase or the use, operation or maintenance of the subject product. In no event will Eaton be liable for any labor subcontracted or performed by Purchaser for preparation of the warranted item for return to an Eaton factory or for preparation work for field repair or replacement, and Eaton will not be responsible to pay any invoice therefore. Some States and jurisdictions do not allow the exclusion or limitation of incidental or consequential damages, so the above limitation or exclusion may not apply to you.

This warranty shall be exclusive of any and all other warranties express or implied and may be modified only by a writing signed by an authorized officer of Eaton. This warranty shall extend to the Purchaser but to no one else. Accessories supplied by Eaton, but manufactured by others, carry any warranty the manufacturers have made to Eaton, and which can be passed on to Purchaser.

EATON makes no warranty with respect to whether the products sold hereunder infringe any patent, U.S. or foreign, and Purchaser represents that any

WARRANTY
Pulsar series *(continued)*

specially ordered products do not infringe any patent. Purchaser agrees to indemnify and hold EATON harmless from any liability by virtue of any patent claims where Purchaser has ordered a product conforming to Purchaser's specifications, or conforming to Purchaser's specific design. Purchaser has not relied and shall not rely on any oral representation regarding any products sold hereunder and any oral representation shall not bind EATON and shall not be part of any warranty.

This warranty gives you specific legal rights, and you may also have other rights which vary from State to State or jurisdiction to jurisdiction.

PROPRIETARY RIGHTS STATEMENT

The information in this manual is the property of EATON, and represents a proprietary article in which EATON retains any and all intellectual property rights, including exclusive rights of use and/or manufacture and/or sale. Possession of this information does not convey any permission to reproduce, print, manufacture, or have made the article or articles shown herein. Such permission may be granted only by specific written authorization signed by an authorized officer of EATON.

IBM, PC-AT, ES/9000, and AS/400 are trademarks of International Business Machines Corporation. Other trademarks that may be used herein are owned by their respective companies and are referred to in an editorial fashion only.

OBTAINING WARRANTY SERVICE: In the USA, call the Customer Reliability Center 7x24 at 800.356.5737. Outside of the USA, contact your local Eaton product sales or service representative for units purchased from those countries, or call the Customer Reliability Center in the USA at 919.845.3683 for units purchased in the USA that were shipped overseas. For comments or questions about this Warranty, write to the Customer Quality Representative, 8609 Six Forks Road, Raleigh, North Carolina 27615 USA.

NOTES

NOTES

NOTES

NOTES