Thinking of you
Electrolux

EHD8740FOK

EN HOB

USER MANUAL

CONTENTS

1. SAFETY INFORMATION 3
2. SAFETY INSTRUCTIONS 4
3. PRODUCT DESCRIPTION 6
4. DAILY USE 7
5. HELPFUL HINTS AND TIPS 11
6. CARE AND CLEANING 13
7. TROUBLESHOOTING 13
8. INSTALLATION 15
9. TECHNICAL INFORMATION 17
10. GREAT BRITAIN & IRELAND - GUARANTEE/CUSTOMER SERVICE 18
11. EUROPEAN GUARANTEE 19

WE'RE THINKING OF YOU

Thank you for purchasing an Electrolux appliance. You've chosen a product that brings with it decades of professional experience and innovation. Ingenious and stylish, it has been designed with you in mind. So whenever you use it, you can be safe in the knowledge that you'll get great results every time.

Welcome to Electrolux.

Visit our website for:

Get usage advice, brochures, trouble shooter, service information:
www.electrolux.com

Register your product for better service:
www.electrolux.com/productregistration

Buy Accessories, Consumables and Original spare parts for your appliance:
www.electrolux.com/shop

CUSTOMER CARE AND SERVICE

We recommend the use of original spare parts.
When contacting Service, ensure that you have the following data available.
The information can be found on the rating plate. Model, PNC, Serial Number.

Warning / Caution-Safety information

General information and tips

Environmental information

Subject to change without notice.

1. SAFETY INFORMATION

Before the installation and use of the appliance, carefully read the supplied instructions. The manufacturer is not responsible if an incorrect installation and use causes injuries and damages. Always keep the instructions with the appliance for future reference.

1.1 Children and vulnerable people safety

⚠ **WARNING!**
Risk of suffocation, injury or permanent disability.

- This appliance can be used by children aged from 8 years and above and persons with reduced physical, sensory or mental capabilities or lack of experience and knowledge if they are supervised by an adult or a person who is responsible for their safety.
- Do not let children play with the appliance.
- Keep all packaging away from children.
- Keep children and pets away from the appliance when it operates or when it cools down. Accessible parts are hot.
- If the appliance has a child safety device, we recommend that you activate it.
- Cleaning and user maintenance shall not be made by children without supervision.

1.2 General Safety

- The appliance and its accessible parts become hot during use. Do not touch the heating elements.
- Do not operate the appliance by means of an external timer or separate remote-control system.
- Unattended cooking on a hob with fat or oil can be dangerous and may result in fire.

- Never try to extinguish a fire with water, but switch off the appliance and then cover flame e.g. with a lid or a fire blanket.
- Do not store items on the cooking surfaces.
- Do not use a steam cleaner to clean the appliance.
- Metallic objects such as knives, forks, spoons and lids should not be placed on the hob surface since they can get hot.
- If the glass ceramic surface is cracked, switch off the appliance to avoid the possibility of electric shock.
- After use, switch off the hob element by its control and do not rely on the pan detector.

2. ⚠ SAFETY INSTRUCTIONS

2.1 Installation

⚠ **WARNING!**
Only a qualified person must install this appliance.

- Remove all the packaging.
- Do not install or use a damaged appliance.
- Obey the installation instruction supplied with the appliance.
- Keep the minimum distance from the other appliances and units.
- Always be careful when you move the appliance because it is heavy. Always wear safety gloves.
- Seal the cut surfaces with a sealant to prevent moisture to cause swelling.
- Protect the bottom of the appliance from steam and moisture.
- Do not install the appliance adjacent to a door or under a window. This prevents hot cookware to fall from the appliance when the door or the window is opened.
- If the appliance is installed above drawers make sure that the space, between the bottom of the appliance and the upper drawer, is sufficient for air circulation.
- Make sure that the ventilation space of 2 mm, between the worktop and the front of the below unit, is free. The warranty does not cover damages caused by the lack of an adequate ventilation space.
- The bottom of the appliance can get hot. We recommend to install a non-combustile separation panel under the appliance to prevent access to the bottom.

Electrical connection

⚠ **WARNING!**
Risk of fire and electrical shock.

- All electrical connections must be made by a qualified electrician.
- The appliance must be earthed.
- Before carrying out any operation make sure that the appliance is disconnected from the power supply.
- Use the correct electricity mains cable.
- Do not let the electricity mains cable tangle.
- Make sure the mains cable or plug (if applicable) does not touch the hot ap-

pliance or hot cookware, when you connect the appliance to the near sockets

- Make sure the appliance is installed correctly. Loose and incorrect electricity mains cable or plug (if applicable) can make the terminal become too hot.
- Make sure that a shock protection is installed.
- Use the strain relief clamp on cable.
- Make sure not to cause damage to the mains plug (if applicable) or to the mains cable. Contact the Service or an electrician to change a damaged mains cable.
- The electrical installation must have an isolation device which lets you disconnect the appliance from the mains at all poles. The isolation device must have a contact opening width of minimum 3 mm.
- Use only correct isolation devices: line protecting cut-outs, fuses (screw type fuses removed from the holder), earth leakage trips and contactors.

2.2 Use

WARNING!
Risk of injury, burns or electric shock.

- Use this appliance in a household environment.
- Do not change the specification of this appliance.
- Do not let the appliance stay unattended during operation.
- Do not operate the appliance with wet hands or when it has contact with water.
- Do not put cutlery or saucepan lids on the cooking zones. They can become hot.
- Set the cooking zone to “off” after each use. Do not rely on the pan detector.
- Do not use the appliance as a work surface or as a storage surface.
- If the surface of the appliance is cracked, disconnect immediately the appliance from the power supply. This to prevent an electrical shock.
- Users with a pacemaker must keep a distance of minimum 30 cm from the induction cooking zones when the appliance is in operation.

WARNING!
Risk of fire or explosion.

- Fats and oil when heated can release flammable vapours. Keep flames or heated objects away from fats and oils when you cook with them.
- The vapours that very hot oil releases can cause spontaneous combustion.
- Used oil, that can contain food remnants, can cause fire at a lower temperature than oil used for the first time.
- Do not put flammable products or items that are wet with flammable products in, near or on the appliance.

WARNING!
Risk of damage to the appliance.

- Do not keep hot cookware on the control panel.
- Do not let cookware to boil dry.
- Be careful not let objects or cookware fall on the appliance. The surface can be damaged.
- Do not activate the cooking zones with empty cookware or without cookware.
- Do not put aluminium foil on the appliance.
- Cookware made of cast iron, aluminium or with a damaged bottom can cause scratches on the glass ceramic. Always lift these objects up when you have to move them on the cooking surface.

2.3 Care and Cleaning

WARNING!
Risk of damage to the appliance.

- Clean regularly the appliance to prevent the deterioration of the surface material.
- Do not use water spray and steam to clean the appliance.
- Clean the appliance with a moist soft cloth. Only use neutral detergents. Do not use abrasive products, abrasive cleaning pads, solvents or metal objects.

2.4 Disposal

WARNING!
Risk of injury or suffocation.

- Contact your municipal authority for information on how to discard the appliance correctly.
- Disconnect the appliance from the mains supply.
- Cut off the mains cable and discard it.

3. PRODUCT DESCRIPTION

3.1 General overview

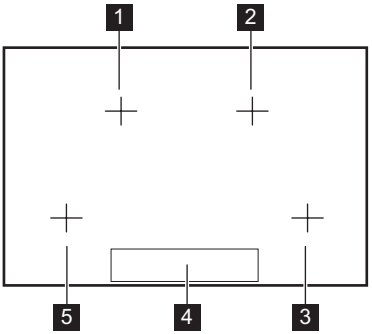

1 Induction cooking zone
2 Induction cooking zone
3 Induction cooking zone
4 Control panel
5 Induction cooking zone

3.2 Control panel layout

To see the control panel activate the appliance with ⏻

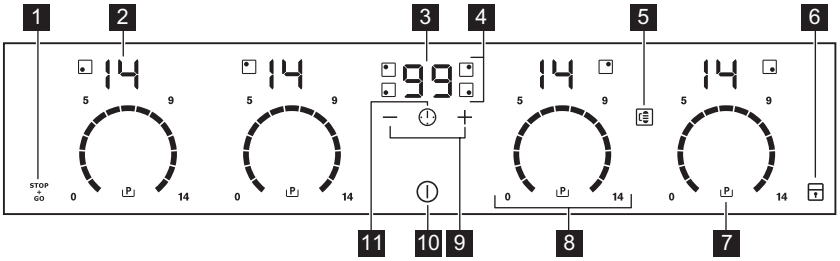

Use the sensor fields to operate the appliance. The displays, indicators and sounds tell which functions operate.

	sensor field	function
1	STOP + GO	To activate and deactivate the STOP+GO function.
2	A heat setting display	To show the heat setting.
3	The timer display	To show the time in minutes.

	sensor field	function
4	Timer indicators of cooking zones	To show for which cooking zone you set the time.
5		To activate the Connect Function.
6		To lock/unlock the control panel.
7		To activate the Power function.
8	A control bar	To set the heat setting.
9	+ / –	To increase or decrease the time.
10		To activate and deactivate the appliance.
11		To set the cooking zone.

3.3 Heat setting displays

Display	Description
0	The cooking zone is deactivated.
1 - 14	The cooking zone operates.
u	The STOP+GO function operates.
A	The Automatic Heat Up function operates.
P	Power function operates.
E + digit	There is a malfunction.
3 / 2 / 1	OptiHeat Control (3 step Residual heat indicator) : continue cook / stay warm / residual heat.
L	Lock / The Child Safety Device operates.
F	Not correct cookware or too small or no cookware on the cooking zone.
-	The Automatic Switch Off function operates.

3.4 OptiHeat Control (3 step Residual heat indicator)

WARNING!
3 \ 2 \ 1 The risk of burns from residual heat!

OptiHeat Control shows the level of the residual heat. The induction cooking zones make the heat necessary for cooking directly in the bottom of the cookware. The glass ceramic is hot from the heat of the cookware.

4. DAILY USE

4.1 Activation and deactivation

Touch ⏻ for 1 second to activate or deactivate the appliance.

The control panel comes on after you activate the appliance and goes off after you deactivate the appliance.
When the appliance is deactivated you can see only ⏻ sensor field.

4.2 Automatic Switch Off

The function deactivates the appliance automatically if:

- All cooking zones are deactivated (0).
- You do not set the heat setting after you activate the appliance.
- You spill something or put something on the control panel for more than 10 seconds, (a pan, a cloth, etc.). An acoustic signal sounds some time and the appliance deactivates. Remove the object or clean the control panel.
- The appliance becomes too hot (e.g. when, a saucepan boils dry). Before you use the appliance again, wait for the cooking zone to cool down.
- You use incorrect cookware. The symbol F comes on and the cooking zone deactivates automatically after 2 minutes.
- You do not deactivate a cooking zone or change the heat setting. After some time - comes on and the appliance deactivates. See below.
- The relation between heat setting and times of the Automatic Switch Off function:
  - u , 1 - 3 — 6 hours
  - 4 - 7 — 5 hours
  - 8 - 9 — 4 hours
  - 10 - 14 — 1.5 hours

4.3 The heat setting

Touch the control bar at the heat setting. Change clockwise or counterclockwise, if it is necessary. Do not release before you have a correct heat setting. The display shows the heat setting.

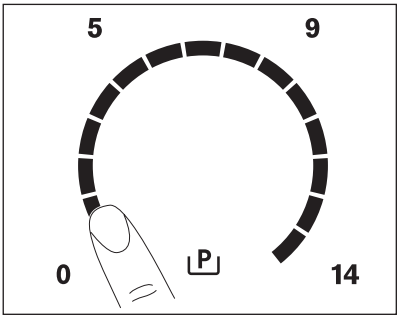

4.4 Connect Function

Use the Connect Function with the Infinite Plancha accessory[1)].

The Connect Function connects two right side cooking zones under the accessory and they operate as one.
First set the heat setting for one of the cooking zones.
To activate the Connect Function, touch . To set or change the heat setting, touch one of the control sensors.
To deactivate the Connect Function, touch . The cooking zones operate independently.

4.5 Automatic Heat Up

You can get a necessary heat setting in a shorter time if you activate the Automatic Heat Up function. This function sets the highest heat setting for some time (see the diagram), and then decreases to the necessary heat setting.
To start the Automatic Heat Up function for a cooking zone:

1. Touch P (P comes on in the display).
2. Immediately touch the necessary heat setting. After 5 seconds A comes on in the display.

To stop the function change the heat setting.

1) The Infinite Plancha accessory is not supplied with the appliance. For more information, please contact your local supplier.

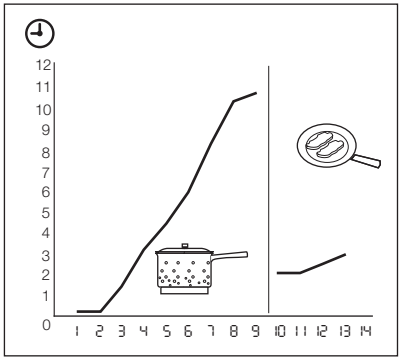

4.6 Power function

The Power function makes more power available to the induction cooking zones. The Power function is activated for 10 minutes at most. After, that the induction cooking zone automatically sets back to highest heat setting. To activate, touch P, P comes on. To deactivate, touch a heat setting 1 - 14 .

4.7 Power management

The power management divides the power between two cooking zones in a pair (see the illustration). The power function increases the power to the maximum level for one cooking zone in the pair. The power in the second cooking zone automatically decreases. The heat setting display for the reduced zone changes between two levels.

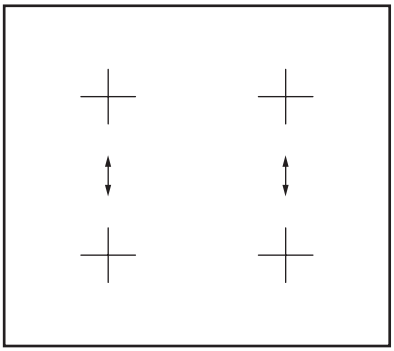

4.8 Timer

Count Down Timer

Use the Count Down Timer to set how long the cooking zone operates for only this one time.

Set the Count Down Timer after the selection of the cooking zone.

You can set the heat setting before or after you set the timer.

- **To set the cooking zone:** touch ⏲ again and again until the indicator of a necessary cooking zone comes on.
- **To activate the Count Down Timer:** touch + of the timer to set the time (00 - 99 minutes). When the indicator of the cooking zone start to flash slow, the time counts down.
- **To see the remaining time:** set the cooking zone with ⏲ . The indicator of the cooking zone starts to flash quickly. The display shows the remaining time.
- **To change the Count Down Timer:** set the cooking zone with ⏲ . Touch + or — .
- **To deactivate the timer:** set the cooking zone with ⏲ . Touch — . The remaining time counts back to 00 . The indicator of the cooking zone goes out.

When the countdown comes to an end, the sound operates and 00 flashes. The cooking zone deactivates.

- **To stop the sound:** touch ⏲

CountUp Timer (The count up timer)

Use the CountUp Timer to monitor how long the cooking zone operates.

- **To set the cooking zone (if more than 1 cooking zone operate) :** touch ⏲ again and again until the indicator of a necessary cooking zone comes on.
- **To activate the CountUp Timer:** touch — of the timer UP comes on. When the indicator of the cooking zone starts to flash slow, the time counts up. The display switches between UP and counted time (minutes).

- **To see how long the cooking zone operates:** set the cooking zone with . The indicator of the cooking zone starts to flash quickly. The display shows the time that the cooking zone operates.
- **To deactivate the CountUp Timer:** set the cooking zone with and touch + or — to deactivate the timer. The indicator of the cooking zone goes out.

Minute Minder

You can use the timer as a **Minute Minder** while the cooking zones do not operate. Touch . Touch + or — of the timer to set the time. When the time comes to an end, the sound operates and 00 flashes.

- **To stop the sound:** touch

4.9 STOP+GO

The STOP+GO function sets all cooking zones that operate to the lowest heat setting ( ).
When STOP+GO operates, you cannot change the heat setting.
The STOP+GO function does not stop the timer function.

- **To activate** this function touch STOP+GO . The symbol comes on.
- **To deactivate** this function touch STOP+GO . The heat setting that you set before comes on.

4.10 Lock

When the cooking zones operate, you can lock the control panel, but not . It prevents an accidental change of the heat setting.
First set the heat setting.
To start this function touch . The symbol comes on for 4 seconds.
The Timer stays on.
To stop this function touch . The heat setting that you set before comes on.
When you stop the appliance, you also stop this function.

4.11 The Child Safety Device

This function prevents an accidental operation of the appliance.

To activate The Child Safety Device

- Activate the appliance with . **Do not set the heat settings**.
- Touch for 4 seconds. The symbol comes on.
- Deactivate the appliance with .

To deactivate The Child Safety Device

- Activate the appliance with . **Do not set the heat settings**. Touch for 4 seconds. The symbol comes on.
- Deactivate the appliance with .

To override The Child Safety Device for only one cooking time

- Activate the appliance with . The symbol comes on.
- Touch for 4 seconds. **Set the heat setting in 10 seconds.** You can operate the appliance.
- When you deactivate the appliance with , The Child Safety Device operates again.

4.12 OffSound Control (Deactivation and activation of the sounds)

Deactivation of the sounds

Deactivate the appliance.
Touch for 3 seconds. The displays come on and go out. Touch for 3 seconds. comes on, the sound is on.
Touch + , comes on, the sound is off.
When this function operates, you can hear the sounds only when:

- you touch
- the Minute Minder comes down
- the Count Down Timer comes down
- you put something on the control panel.

Activation of the sounds

Deactivate the appliance.
Touch for 3 seconds. The displays come on and go out. Touch for 3 sec-

onds. [61] comes on, because the sound is off. Touch +, [60] comes on. The sound is on.

5. HELPFUL HINTS AND TIPS

INDUCTION COOKING ZONES

For induction cooking zones a strong electro-magnetic field creates the heat in the cookware very quickly.

5.1 Cookware for induction cooking zones

Use the induction cooking zones with correct cookware.

Cookware material

- **correct:** cast iron, steel, enamelled steel, stainless steel, the bottom made of multi-layer (with correct mark from a manufacturer).
- **not correct:** aluminium, copper, brass, glass, ceramic, porcelain.

Cookware is correct for an induction hob if …

- ... some water boils very quickly on a zone set to the highest heat setting..
- ... a magnet pulls on to the bottom of the cookware.

The bottom of the cookware must be as thick and flat as possible.

5.2 Use of the cooking zones

IMPORTANT

Put the cookware on the cross which is on the surface that you cook. Cover the cross fully. The magnetic part of the bottom of the cookware must be 125 mm minimum. Induction cooking zones adapt to the dimension of the bottom of the cookware automatically. You can cook with the large cookware on two cooking zones at the same time.

5.3 The noises during operation

If you can hear

- crack noise: cookware is made of different materials (Sandwich construction).
- whistle sound: you use one or more cooking zones with high power levels and the cookware is made of different materials (Sandwich construction).
- humming: you use high power levels.
- clicking: electric switching occurs.
- hissing, buzzing: the fan operates.

The noises are normal and do not refer to appliance malfunction.

5.4 Energy saving

How to save energy

- If it is possible, always put the lids on the cookware.
- Put cookware on a cooking zone before you start it.
- Use the residual heat to keep the food warm or to melt it.

The cooking zone efficiency

The cooking zone efficiency is related to the diameter of the cookware. The cookware with a smaller diameter than the minimum receives only a part of the power generated by the cooking zone. For the minimum diameters see the Technical Information chapter.

5.5 Öko Timer (Eco Timer)

To save energy, the heater of the cooking zone deactivates before the count down timer sounds. The difference in the operation time depends on the heat setting level and the length of the cooking operation.

5.6 The Examples of cooking applications

The relation between the heat setting and the cooking zone consumption of power is not linear.
When you increase the heat setting it is not proportional to the increase of the cooking zone consumption of power.
It means that the cooking zone with the medium heat setting uses less than a half of its power.

The data in the table is for guidance only.

Heat setting	Use to:	Time	Hints	Nominal power consumption
1	Keep warm the food you cooked	as required	Put a lid on a cookware	3 %
1 - 3	Hollandaise sauce, melt: butter, chocolate, gelatine	5 - 25 min	Mix from time to time	3 – 8 %
1 - 3	Solidify: fluffy omelettes, baked eggs	10 - 40 min	Cook with a lid on	3 – 8 %
3 - 5	Simmer rice and milk-based dishes, heating up ready-cooked meals	25 - 50 min	Add the minimum twice as much liquid as rice, mix milk dishes part procedure through	8 – 13 %
5 - 7	Steam vegetables, fish, meat	20 - 45 min	Add some tablespoons of liquid	13 – 18 %
7 - 9	Steam potatoes	20 - 60 min	Use max. ¼ l water for 750 g of potatoes	18 – 25 %
7 - 9	Cook larger quantities of food, stews and soups	60 - 150 min	Up to 3 l liquid plus ingredients	18 – 25 %
9 - 12	Gentle fry: escalope, veal cordon bleu, cutlets, rissoles, sausages, liver, roux, eggs, pancakes, doughnuts	as necessary	Turn halfway through	25 – 45 %
12 - 13	Heavy fry, hash browns, loin steaks, steaks	5 - 15 min	Turn halfway through	45 – 64 %
14	Boil water, cook pasta, sear meat (goulash, pot roast), deep-fry chips			100 %
P	Boil large quantities of water. Power function is activated.			

6. CARE AND CLEANING

Clean the appliance after each use.
Always use cookware with clean bottom.

Scratches or dark stains on the glass-ceramic cause no effect on how the appliance operates.

To remove the dirt:

1. – **Remove immediately:** melted plastic, plastic foil, and food with sugar. If not, the dirt can cause damage to the appliance. Use a special scraper for the glass . Put the scraper on the glass surface at an acute angle and move the blade on the surface .
   – **Remove after the appliance is sufficiently cool:** limescale rings , water rings, fat stains, shiny metallic discolorations. Use a special cleaning agent for glass ceramic or stainless steel.
2. Clean the appliance with a moist cloth and some detergent.
3. At the end **rub the appliance dry with a clean cloth.**

7. TROUBLESHOOTING

Problem	Possible cause	Remedy
You cannot activate the appliance or operate it.		Activate the appliance again and set the heat setting in less than 10 seconds.
	You touched 2 or more sensor fields at the same time.	Touch only one sensor field.
	The STOP+GO function operates.	Refer to the chapter “Daily Use”.
	There is water or fat stains on the control panel.	Clean the control panel.
An acoustic signal sounds and the appliance deactivates. An acoustic signal sounds when the appliance is deactivated.	You put something on one or more sensor fields.	Remove the object from the sensor fields.
The appliance deactivates.	You put something on the sensor field ⏻ .	Remove the object from the sensor field.
The residual heat indicator does not come on.	The cooking zone is not hot because it operated only for a short time.	If the cooking zone operated sufficiently long to be hot, speak to the service centre.
The Automatic Heat Up function does not operate.	The cooking zone is hot.	Let the cooking zone become sufficiently cool.

Problem	Possible cause	Remedy
	The highest heat setting is set.	The highest heat setting has the same power as the Automatic Heat Up function.
The heat setting changes between two levels.	The Power management is activated.	Refer to “Power management”.
The sensor fields become hot.	The cookware is too large or you put it too near to the controls.	Put large cookware on the rear cooking zones if necessary.
There is no signal when you touch the panel sensor fields.	The signals are deactivated.	Activate the signals (refer to “OffSound control”).
[-] comes on.	The Automatic Switch Off operates.	Deactivate the appliance and activate it again.
[L] comes on.	The Child Safety Device or the Lock function operates.	Refer to the chapter “Daily Use”.
[F] comes on.	No cookware is on the cooking zone.	Put cookware on the cooking zone.
	The cookware is incorrect.	Use the correct cookware.
	The diameter of the bottom of the cookware is too small for the cooking zone.	Use cookware with correct dimensions.
	The cookware do not cover the cross / square fully.	Cover the cross / square fully.
[E] and a number come on.	There is an error in the appliance.	Disconnect the appliance from the electrical supply for some time. Disconnect the fuse from the electrical system of the house. Connect it again. If [E] comes on again, speak to the service centre.
[E3] comes on.	The electrical connection is incorrect. The supply voltage is out of range.	Speak to a qualified electrician to check the installation.

Problem	Possible cause	Remedy
E4 comes on.	There is an error in the appliance because a cookware boils dry. The overheating protection for the cooking zones and the Automatic Switch Off operate.	Deactivate the appliance. Remove the hot cookware. After approximately 30 seconds, activate the cooking zone again. If the cookware was the problem, the error message goes out of the display, but the residual heat indicator can stay. Let the cookware become sufficiently cool and refer to “Cookware for the induction cooking zone” to see if your cookware is compatible with the appliance.
E7 comes on.	The cooling fan is blocked.	Check if objects block the cooling fan. If E7 comes on again, speak to the service center.
E8 comes on.	The electrical connection is incorrect. The appliance is connected only to one phase.	Connect the appliance as you see it in the connection illustration.

If you tried the above solutions and cannot repair the problem, speak to your dealer or the customer service. Give the data from the rating plate, three digit letter code for the glass ceramic (it is in the corner of the glass surface) and an error message that comes on.

Make sure, you operated the appliance correctly. If not the servicing by a customer service technician or dealer will not be free of charge, also during the warranty period. The instructions about the customer service and conditions of guarantee are in the guarantee booklet.

8. INSTALLATION

WARNING!
Refer to the Safety chapters.

Before the installation

Before the installation of the appliance, record the information below from the rating plate. The rating plate is on the bottom of the appliance casing.

- Model .....
- PNC .....
- Serial number .....

8.1 Built-in appliances

- Only use the built-in appliances after you assemble the appliance into correct built-in units and work surfaces that align to the standards.

8.2 Connection cable

- Use the correct mains cable of type H05BB-F Tmax 90°C (or higher) for a single phase or two phase connection.
- Replace the damaged mains cable with a special cable (type H05BB-F Tmax

90°C or higher). Speak to your local Service Centre.

8.3 Assembly

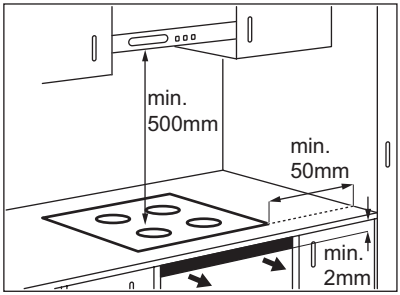

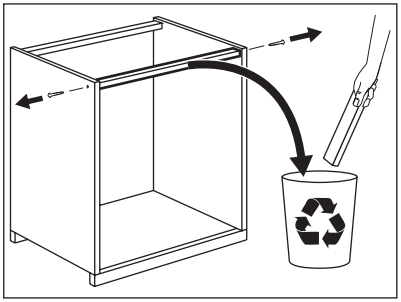

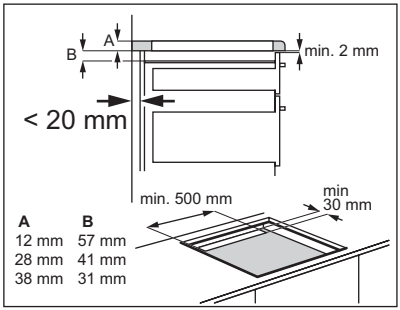

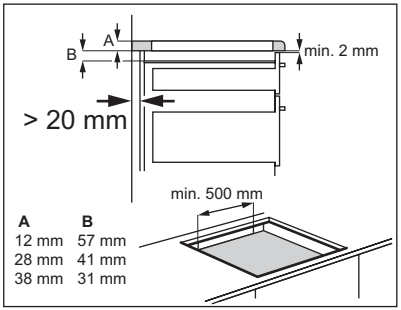

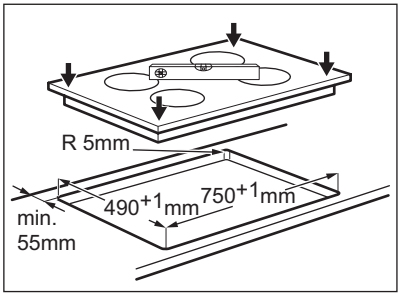

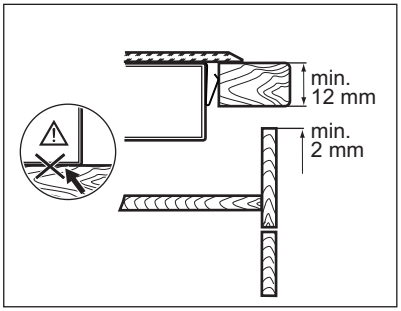

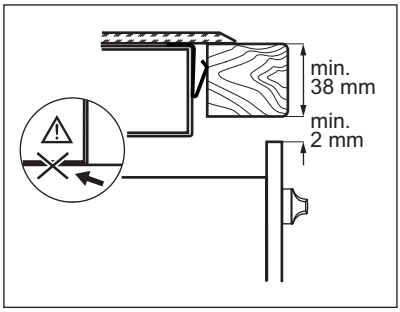

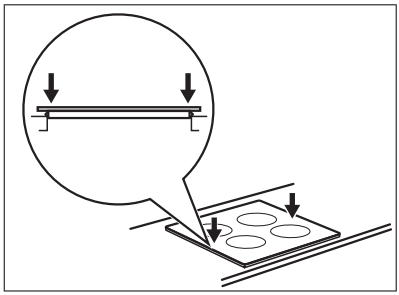

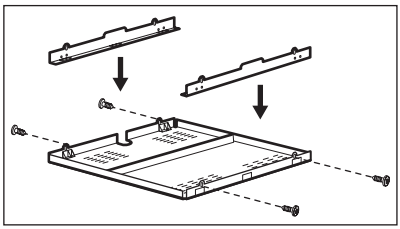

If you use a protection box (an additional accessory[1)]), the front airflow space of 2 mm and protective floor directly below the appliance are not necessary.
You can not use the protection box if you install the appliance above an oven.

[1)] The protection box accessory may not be available in some countries. Please contact your local supplier.

9. TECHNICAL INFORMATION

Modell EHD8740FOK	Prod.Nr. 949 596 101 00
Typ 58 GBD CC AU	220 - 240 V 50 - 60 Hz
Induction 7.4 kW	Made in Germany
Ser.Nr.	7.4 kW
Electrolux	

Cooking zones power

Cooking zone	Nominal Power (Max heat setting) [W]	Power Function activated [W]	Power function maximum duration [min]	Minimum cookware diameter [mm]
Right rear	2300 W	3200 W	10	125
Right front	2300 W	3200 W	10	125
Left rear	2300 W	3200 W	10	125
Left front	2300 W	3200 W	10	125

The power of the cooking zones can be different in some small range from the data in the table. It changes with the material and dimensions of the cookware.

10. GB IE GREAT BRITAIN & IRELAND - GUARANTEE/ CUSTOMER SERVICE

10.1 Standard guarantee conditions:

We, Electrolux, undertake that if within 12 months of the date of the purchase this Electrolux appliance or any part thereof is proved to be defective by reason only of faulty workmanship or materials, we will, at our option repair or replace the same FREE OF CHARGE for labour, materials or carriage on condition that:

- Appliance has been correctly installed and used only on the electricity supply stated on the rating plate.
- Appliance has been used for normal domestic purposes only, in accordance with manufacturer's instructions.
- Appliance hasn't been serviced, maintained, repaired, taken apart or tampered with by person not authorised by us.
- Electrolux Service Force Centre must undertake all service work under this guarantee
- Any appliance or defective part replaced shall become the Company's property.
- This guarantee is in addition to your statutory and other legal rights.

Exclusions

- Damage, calls resulting from transport, improper use, neglect, light bulbs, removable parts of glass, plastic.
- Costs for calls to put right appliance which is improperly installed, calls to appliances outside United Kingdom.
- Appliances found to be in use within a commercial environment, plus those which are subject to rental agreements.
- Products of Electrolux manufacturer that are not marketed by Electrolux

Service and Spare Parts. Please contact your local Service Force Centre: **08445 616 616**(Call will be routed to Service Force Centre covering your postcode area). For address of local Service Force Centre and further information, please visit: **www.serviceforce.co.uk** Before calling out an engineer, please ensure you have read the details under the heading "What to do if... / Troubleshooting". When you contact the Service Force Centre you will need to give the following details: Your name, address and postcode, your telephone number, clear concise details of the fault, model and serial number of the appliance (found on the rating plate), the purchase date. Please note a valid purchase receipt or guarantee documentation is required for in guarantee service calls.

Customer Care. Please contact our Customer Care Department: Electrolux Major Appliances, Addington Way, Luton, Bedfordshire, LU4 9QQ or visit our website at www.electrolux.co.uk

Customer Care Department,	**Tel: (Calls may be recorded for training purposes)**
Electrolux	08445 613 613
AEG-Electrolux	08445 611 611
Zanussi-Electrolux	08445 612 612

For Customer Service in The Republic of Ireland please contact us at the address below:

Electrolux Group (Irl) Ltd, Long Mile Road, Dublin 12, Republic of Ireland
Tel: +353 (0)1 4090751, Email: service.eid@electrolux.ie

11. EUROPEAN GUARANTEE

GB This appliance is guaranteed by Electrolux in each of the countries listed at the back of this user manual, for the period specified in the appliance guarantee or otherwise by law. If you move from one of these countries to another of the countries listed, the appliance guarantee will move with you subject to the following qualifications:-

- The appliance guarantee starts from the date you first purchased the appliance which will be evidenced by production of a valid purchase document issued by the seller of the appliance.
- The appliance guarantee is for the same period and to the same extent for labour and parts as exists in your new country of residence for this particular model or range of appliances.
- The appliance guarantee is personal to the original purchaser of the appliance and cannot be transferred to another user.
- The appliance is installed and used in accordance with instructions issued by Electrolux and is only used within the home, i.e. is not used for commercial purposes.
- The appliance is installed in accordance with all relevant regulations in force within your new country of residence.

The provisions of this European Guarantee do not affect any of the rights granted to you by law.

12. WWW.ELECTROLUX.COM

Albania	+355 4 261 450	Rruga “Kavajës”, ish-parku autobuzëve, Tiranë
Belgique/België/Belgien	+32 2 7162444	Raketstraat 40, 1130 Brussel/ Bruxelles
Česká Republika	+420 261 302 261	Budějovická 3, Praha 4, 140 21
Danmark	+45 70 11 74 00	Strevelinsvej 38-40, 7000 Fredericia
Deutschland	+49 180 32 26 622	Fürther Str. 246, 90429 Nürnberg
Eesti	+37 2 66 50 030	Pärnu mnt. 153, 11624 Tallinn
España	+34 902 11 63 88	Carretera M-300, Km. 29,900 Alcalá de Henares Madrid
France	08 92 68 24 33 (0.34€/min)	www.electrolux.fr
Great Britain	+44 8445 616 616	Addington Way, Luton, Bedfordshire LU4 9QQ
Hellas	+30 23 10 56 19 70	4, Limnou Str., 54627 Thessaloniki
Hrvatska	+385 1 63 23 338	Slavonska avenija 3, 10000 Zagreb
Ireland	+353 1 40 90 753	Long Mile Road Dublin 12
Italia	+39 (0) 434 558500	Corso Lino Zanussi, 30 - 33080 Porcia (PN)

Latvija	+371 67313626	Kr. Barona iela 130/2, LV-1012, Riga
Lietuva	+370 5 278 06 03	Ozo 10a, LT-08200 Vilnius
Luxembourg	+352 42 431 301	Rue de Bitbourg, 7, L-1273 Hamm
Magyarország	(06-1)467-3205 +361 252 1773	H-1142 Budapest XIV, Erzsébet Királyné útja 87
Nederland	+31 17 24 68 300	Vennootsweg 1, 2404 CG - Alphen aan den Rijn
Norge	+47 81 5 30 222	Risløkkvn. 2 , 0508 Oslo
Österreich	0810 955030	Herziggasse 9, 1230 Wien
Polska	+48 22 43 47 300	ul. Kolejowa 5/7, 01–217 Warszawa
Portugal	+35 12 14 40 39 39	Quinta da Fonte - Edifício Gonçalves Zarco - Q 35 -2774-518 Paço de Arcos
Romania	+40 21 451 20 30	Str. Garii Progresului 2, S4, 040671 RO
Schweiz - Suisse - Svizzera	0848 848 111	Industriestrasse 10, CH-5506 Mägenwil
Slovenija	+38 61 24 25 731	Gerbičeva ulica 110, 1000 Ljubljana
Slovensko	+421 2 32 14 13 34-5	Electrolux Slovakia s.r.o., Electrolux Domáce spotrebiče SK, Galvaniho 17/B, 821 04 Bratislava
Suomi	030 600 5200 Lankapuhelinverkosta 0,0828€/puhelu+0,032€/min Matkapuhelinverkosta 0,192€/min	
Sverige	+46 (0)771 76 76 76	Electrolux Service, S:t Göransgatan 143, S-105 45 Stockholm
Türkiye	+90 21 22 93 10 25	Tarlabaşı caddesi no : 35 Taksim İstanbul
Россия	8-800-200-3589	129090 Москва, Олимпийский проспект, 16, БЦ "Олимпик"
Україна	+380 44 586 20 60	04074 Київ, вул.Автозаводська, 2а, БЦ "Алкон"

13. ENVIRONMENT CONCERNS

Recycle the materials with the symbol ♺. Put the packaging in applicable containers to recycle it.

Help protect the environment and human health and to recycle waste of electrical and electronic appliances. Do not dispose appliances marked with the symbol

with the household waste. Return the product to your local recycling facility or contact your municipal office.

www.electrolux.com/shop



892951971-C-022013

CE