EVY6800AAX
EVY6800ZOZ



EN Microwave Oven

User Manual

Electrolux

CONTENTS

1. SAFETY INFORMATION....3
2. SAFETY INSTRUCTIONS....5
3. PRODUCT DESCRIPTION....8
4. CONTROL PANEL....8
5. BEFORE FIRST USE....10
6. DAILY USE....10
7. CLOCK FUNCTIONS....13
8. AUTOMATIC PROGRAMMES....14
9. USING THE ACCESSORIES....15
10. ADDITIONAL FUNCTIONS....15
11. HINTS AND TIPS....17
12. CARE AND CLEANING....23
13. TROUBLESHOOTING....24
14. ENERGY EFFICIENCY....26

WE'RE THINKING OF YOU

Thank you for purchasing an Electrolux appliance. You've chosen a product that brings with it decades of professional experience and innovation. Ingenious and stylish, it has been designed with you in mind. So whenever you use it, you can be safe in the knowledge that you'll get great results every time.
Welcome to Electrolux.
Visit our website for:



Get usage advice, brochures, trouble shooter, service information:
www.electrolux.com/webselfservice



Register your product for better service:
www.registerelectrolux.com



Buy Accessories, Consumables and Original spare parts for your appliance:
www.electrolux.com/shop

CUSTOMER CARE AND SERVICE

Always use original spare parts.
When contacting our Authorised Service Centre, ensure that you have the following data available: Model, PNC, Serial Number.
The information can be found on the rating plate.

⚠ Warning / Caution-Safety information
ⓘ General information and tips
Environmental information

Subject to change without notice.

1. ⚠ SAFETY INFORMATION

Before the installation and use of the appliance, carefully read the supplied instructions. The manufacturer is not responsible for any injuries or damages that are the result of incorrect installation or usage. Always keep the instructions in a safe and accessible location for future reference.

1.1 Children and vulnerable people safety

- This appliance can be used by children aged from 8 years and above and persons with reduced physical, sensory or mental capabilities or lack of experience and knowledge if they have been given supervision or instruction concerning the use of the appliance in a safe way and understand the hazards involved.
- Children between 3 and 8 years of age and persons with very extensive and complex disabilities shall be kept away unless continuously supervised.
- Children of less than 3 years of age should be kept away unless continuously supervised.
- Do not let children play with the appliance.
- Keep all packaging away from children and dispose of it appropriately.
- Keep children and pets away from the appliance when it operates or when it cools down. Accessible parts are hot.
- If the appliance has a child safety device, it should be activated.
- Children shall not carry out cleaning and user maintenance of the appliance without supervision.

1.2 General Safety

- Only a qualified person must install this appliance and replace the cable.
- WARNING: The appliance and its accessible parts become hot during use. Care should be taken to avoid touching heating elements.

- Always use oven gloves to remove or put in accessories or ovenware.
- Before carrying out any maintenance, disconnect the appliance from the power supply.
- Ensure that the appliance is switched off before replacing the lamp to avoid the possibility of electric shock.
- Do not use a steam cleaner to clean the appliance.
- Do not use harsh abrasive cleaners or sharp metal scrapers to clean the glass door since they can scratch the surface, which may result in shattering of the glass.
- If the mains power supply cable is damaged, it must be replaced by the manufacturer, its Authorised Service Centre or similarly qualified persons to avoid an electrical hazard.
- Do not activate the appliance when it is empty. Metal parts inside the cavity can create electric arcing.
- Metallic containers for food and beverages are not allowed during microwave cooking. This requirement is not applicable if the manufacturer specifies size and shape of metallic containers suitable for microwave cooking.
- If the door or door seals are damaged, the appliance must not be operated until it has been repaired by a qualified person.
- Only a qualified person can carry out any service or repair operation that involves the removal of a cover which gives protection against exposure to microwave energy.
- Do not heat liquids and other foods in sealed containers. They are liable to explode.
- Only use utensils that are suitable for use in microwave ovens.
- When heating food in plastic or paper containers, keep an eye on the appliance due to the possibility of ignition.

- The appliance is intended for heating food and beverages. Drying of food or clothing and heating of warming pads, slippers, sponges, damp cloth and similar may lead to risk of injury, ignition or fire.
- If smoke is emitted, switch off or unplug the appliance and keep the door closed in order to stifle any flames.
- Microwave heating of beverages can result in delayed eruptive boiling. Care must be taken when handling the container.
- The contents of feeding bottles and baby food jars shall be stirred or shaken and the temperature checked before consumption, in order to avoid burns.
- Eggs in their shell and whole hard-boiled eggs should not be heated in the appliance since they may explode, even after microwave heating has ended.
- The appliance should be cleaned regularly and any food deposits removed.
- Failure to maintain the appliance in a clean condition could lead to deterioration of the surface that could adversely affect the life of the appliance and possibly result in a hazardous situation.

2. SAFETY INSTRUCTIONS

2.1 Installation

WARNING!
Only a qualified person must install this appliance.

- Remove all the packaging.
- Do not install or use a damaged appliance.
- Follow the installation instructions supplied with the appliance.
- Always take care when moving the appliance as it is heavy. Always use safety gloves and enclosed footwear.
- Do not pull the appliance by the handle.
- Keep the minimum distance from other appliances and units.
- Make sure that the appliance is installed below and adjacent safe structures.
- The sides of the appliance must stay adjacent to appliances or units with the same height.

2.2 Electrical connection

WARNING!
Risk of fire and electric shock.

- All electrical connections should be made by a qualified electrician.
- The appliance must be earthed.
- Make sure that the parameters on the rating plate are compatible with the electrical ratings of the mains power supply.
- Always use a correctly installed shockproof socket.
- Do not use multi-plug adapters and extension cables.

- Make sure not to cause damage to the mains plug and to the mains cable. Should the mains cable need to be replaced, this must be carried out by our Authorised Service Centre.
- Do not let mains cables touch or come near the appliance door, especially when the door is hot.
- The shock protection of live and insulated parts must be fastened in such a way that it cannot be removed without tools.
- Connect the mains plug to the mains socket only at the end of the installation. Make sure that there is access to the mains plug after the installation.
- If the mains socket is loose, do not connect the mains plug.
- Do not pull the mains cable to disconnect the appliance. Always pull the mains plug.
- Use only correct isolation devices: line protecting cut-outs, fuses (screw type fuses removed from the holder), earth leakage trips and contactors.
- The electrical installation must have an isolation device which lets you disconnect the appliance from the mains at all poles. The isolation device must have a contact opening width of minimum 3 mm.
- This appliance complies with the E.E.C. Directives.

2.3 Use

WARNING!
Risk of injury, burns and electric shock or explosion.

- This appliance is for household use only.
- Do not change the specification of this appliance.
- Make sure that the ventilation openings are not blocked.
- Do not let the appliance stay unattended during operation.
- Deactivate the appliance after each use.
- Be careful when you open the appliance door while the appliance is in operation. Hot air can release.
- Do not operate the appliance with wet hands or when it has contact with water.
- Do not apply pressure on the open door.
- Do not use the appliance as a work surface or as a storage surface.
- Open the appliance door carefully. The use of ingredients with alcohol can cause a mixture of alcohol and air.
- Do not let sparks or open flames to come in contact with the appliance when you open the door.
- Do not put flammable products or items that are wet with flammable products in, near or on the appliance.
- Do not use microwave function to preheat the oven.

WARNING!
Risk of damage to the appliance.

- To prevent damage or discoloration to the enamel:
  - do not put aluminium foil directly on the bottom of cavity of the appliance.
  - do not put water directly into the hot appliance.
  - do not keep moist dishes and food in the appliance after you finish the cooking.
  - be careful when you remove or install the accessories.
- Discoloration of the enamel or stainless steel has no effect on the performance of the appliance.
- Use a deep pan for moist cakes. Fruit juices cause stains that can be permanent.
- This appliance is for cooking purposes only. It must not be used for other purposes, for example room heating.
- Always cook with the oven door closed.
- If the appliance is installed behind a furniture panel (e.g. a door) make sure the door is never closed when the appliance is in operation. Heat and moisture can build up behind a closed furniture panel and cause subsequent damage to the appliance, the housing unit or the floor. Do not

close the furniture panel until the appliance has cooled down completely after use.

2.4 Care and cleaning



WARNING!
Risk of injury, fire, or damage to the appliance.

- Before maintenance, deactivate the appliance and disconnect the mains plug from the mains socket.
- Make sure the appliance is cold. There is the risk that the glass panels can break.
- Replace immediately the door glass panels when they are damaged. Contact the Authorised Service Centre.
- Make sure the cavity and the door are wiped dry after each use. Steam produced during the operation of the appliance condensates on cavity walls and can cause corrosion.
- Clean regularly the appliance to prevent the deterioration of the surface material.
- Fat and food remaining in the appliance can cause fire and electric arcing when the microwave function operates.
- Clean the appliance with a moist soft cloth. Only use neutral detergents. Do not use any abrasive products, abrasive cleaning pads, solvents or metal objects.
- If you use an oven spray, follow the safety instruction on it's packaging.
- Do not clean the catalytic enamel (if applicable) with any kind of detergent.

2.5 Internal lighting



WARNING!
Risk of electric shock.

- The type of light bulb or halogen lamp used for this appliance is for household appliances only. Do not use it for house lighting.
- Before replacing the lamp, disconnect the appliance from the power supply.
- Only use lamps with the same specifications.

2.6 Service

- To repair the appliance contact an Authorised Service Centre.
- Use original spare parts only.

2.7 Disposal



WARNING!
Risk of injury or suffocation.

- Disconnect the appliance from the mains supply.
- Cut off the mains electrical cable close to the appliance and dispose of it.
- Remove the door catch to prevent children or pets from becoming trapped in the appliance.

3. PRODUCT DESCRIPTION

3.1 General overview

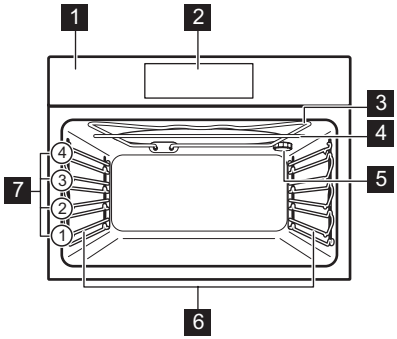

1 Control panel
2 Display
3 Heating element
4 Microwave generator
5 Lamp
6 Shelf support, removable
7 Shelf positions

3.2 Accessories

For cookware, cake tins, roasts.

Wire shelf

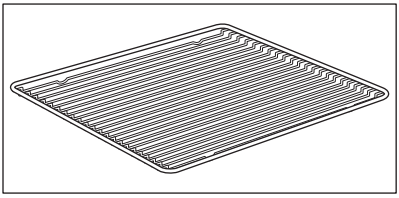

4. CONTROL PANEL

4.1 Electronic programmer

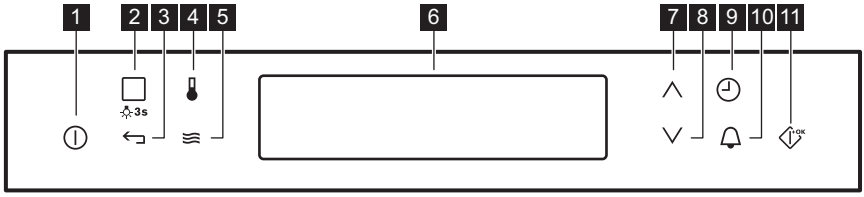

Use the sensor fields to operate the appliance.
If they are not visible touch ⏻ to activate them.

	Sensor field	Function	Comment
1	⏻	ON / OFF	To activate and deactivate the appliance.

	Sensor field	Function	Comment
2		Grill or Assisted Cooking	Touch the sensor field once to choose a heating function or the menu: Assisted Cooking. Touch the sensor field again to switch between the functions: Grill, Assisted Cooking. To activate or deactivate the light, touch the field for 3 seconds.
3		Back key	To go back one level in the menu. To show the main menu, touch the field for 3 seconds.
4		Temperature selection	To set the temperature or show the current temperature in the appliance.
5		Microwave function	To activate the Microwave function. When you use the Microwave function with the function: Duration for more than 7 minutes and in Combi mode, the Microwave power cannot be more than 600 W.
6	-	Display	Shows the current settings of the appliance.
7		Up key	To move up in the menu.
8		Down key	To move down in the menu.
9		Time and additional functions	To set different functions. When a heating function operates, touch the sensor field to set the timer or the functions: Function Lock, Favourites, Heat + Hold, Set + Go.
10		Minute Minder	To set the function: Minute Minder.
11		OK / Microwave Quick Start	To confirm the selection or settings. To activate the Microwave function. You can use it when the appliance is deactivated.

4.2 Display

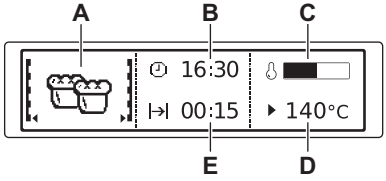

A. Heating function or Microwave function
B. Time of day
C. Heat-up indicator
D. Temperature or power of the microwave
E. Duration time or end time of a function

Other indicators of the display:

Symbol		Function
	Minute Minder	The function operates.
	Time of day	The display shows the current time.
	Duration	The display shows the necessary time for cooking.
	End Time	The display shows when the cooking time is complete.
	Temperature	The display shows the temperature.
	Time Indication	The display shows how long the heating function operates. Press ∨ and ∧ at the same time to reset the time.
	Heat-up Indicator	The display shows the temperature in the appliance.
	Weight Automatic	The display shows that the automatic weight system is active or that weight can be changed.
	Heat + Hold	The function is active.

5. BEFORE FIRST USE

WARNING!
Refer to Safety chapters.

5.1 Initial Cleaning

Remove all accessories and removable shelf supports from the oven.

Refer to "Care and cleaning" chapter.

Clean the oven and the accessories before first use.
Put the accessories and the removable shelf supports back to their initial position.

5.2 First Connection

When you connect the oven to the mains or after the power cut, you have to set the language, the display contrast, the display brightness and the time of the day.

1. Press ∧ or ∨ to set the value.
2. Press OK to confirm.

6. DAILY USE

WARNING!
Refer to Safety chapters.

6.1 Navigating the menus

1. Turn on the oven.

2. Press ∨ or ∧ to select the menu option.
3. Press OK to move to the submenu or accept the setting.

At each point you can go back to the main menu with ↩.

6.2 The menus in overview

Main menu

Symbol / Menu item	Application
Grill	A heating function to grill flat food items in the middle of the shelf. To make toast.
Assisted Cooking	Contains a list of automatic programmes.
Basic Settings	Used to set the appliance configuration.
Favourites	Contains a list of favourite cooking programmes created by the user.

Submenu for: Basic Settings

Symbol / Menu item	Description
Set Time of Day	Sets the current time on the clock.
Time Indication	When ON, the display shows the current time when you deactivate the appliance.
Set + Go	To set a function and activate it later with a press of any symbol on the control panel.
Heat + Hold	Keeps the prepared food warm for 30 minutes after a cooking cycle finished.
Time Extension	Activates and deactivates the time extension function.
Display Contrast	Adjusts the display contrast by degrees.
Display Brightness	Adjusts the display brightness by degrees.
Set Language	Sets the language for the display.
Buzzer Volume	Adjusts the volume of press-tones and signals by degrees.
Key Tones	Activates and deactivates the tone of the touch fields. It is not possible to deactivate the tone of the ON / OFF touch field.
Alarm/Error Tones	Activates and deactivates the alarm tones.
Service	Shows the software version and configuration.
Factory Settings	Resets all settings to factory settings.

6.3 Setting a heating function

1. Turn on the oven.
2. Select the function: Grill.
3. Press OK to confirm.
4. Set the temperature.
5. Press OK to confirm.

6.4 Microwave functions

Functions	Description
Microwave	Creates the heat directly in the food. Use it to heat meals and drinks, to defrost meat or fruit, and to cook vegetables and fish.
Combi	Use it to operate the heating function and the microwave mode together. Use it to cook food in a shorter time and brown it.
Quick Start	Use it to turn on the Microwave function with one touch of the symbol with the high microwave power and short operating time: 30 seconds.

6.5 Setting the Microwave function

1. Remove all accessories.
2. Turn on the oven.
3. Press to turn on the Microwave function.
4. Press . The function: Duration is set to 30 seconds and the microwaves starts to operate.

Each press of adds 30 seconds to the time of the function: Duration.

If you do not press , the oven turns off after 20 seconds.

5. Press to set the function: Duration. Refer to "Setting the clock functions".

The maximum setting of the time for the function: Duration is 90 minutes.

You can change the microwave power (press and then or) and the function: Duration any time when the Microwave function works.

6. When the set time ends, a signal sounds for 2 minutes. The Microwave function turns off automatically. Press any symbol to stop the signal.

To turns off the Microwave function, press .

If you press or open the door, the function stops. To start it again, press .

6.6 Setting the Combi function

1. Turn on a heating function. Refer to "Setting a heating function".
2. Press and do the same steps as when you set the Microwave function.

For some functions the microwave will start as soon as the set temperature is reached.

Functions not available for the Combi function: Favourites, End Time, Set + Go, Heat + Hold.

6.7 Setting the Quick Start function

1. If necessary, press to turn off the oven.
2. Press to turn on the Quick Start function.

Each press of adds 30 seconds to the Duration time.

You can change the microwave power (refer to "Setting the Microwave function").

3. Press ⏲ to set the time for the function: Duration. Refer to "Clock functions" chapter, Setting the clock functions.

6.8 Heat-up indicator

When you turn on a heating function, the bar on the display comes on. The bar shows that the temperature increases. When temperature is reached the buzzer sounds 3 times and the bar flashes and then disappears.

6.9 Residual heat

When you turn off the oven, the display shows the residual heat. You can use the heat to keep the food warm.

7. CLOCK FUNCTIONS

7.1 Clock functions table

Clock function	Application
🔔 Minute Minder	To set a countdown (max. 2 h 30 min). This function has no effect on the operation of the oven. Use 🔔 to turn on the function. Press ∧ or ∨ to set the minutes and OK to start.
|→| Duration	To set how long the oven works (max. 23 h 59 min).
→| End Time	To set the switch-off time for a heating function (max. 23 h 59 min).

If you set the time for a clock function, the time starts to count down after 5 seconds.

If you use the clock functions: Duration, End Time, the oven turns off the heating elements after 90 % of the set time. The oven uses the residual heat to continue the cooking process until the time ends (3 - 20 minutes).

7.2 Setting the clock functions

Before you use the functions: Duration, End Time, you must set a heating function and temperature first. The oven turns off automatically.
You can use the functions: Duration and End Time at the same time if you want to automatically turn on and turn off the oven on a given time later.

1. Set a heating function.
2. Press ⏲ again and again until the display shows the necessary clock function and the related symbol.
3. Press ∧ or ∨ to set the necessary time.
4. Press OK to confirm.

When the time ends, a signal sounds. The oven turns off. The display shows a message.

5. Press any symbol to stop the signal.

7.3 Heat + Hold

Conditions for the function:

- The set temperature is more than 80 °C.
- The function: Duration is set.

The function: Heat + Hold keeps prepared food warm at 80 °C for 30 minutes. It turns on after the baking or roasting procedure ends.

You can turn on or turn off the function in the menu: Basic Settings.

1. Turn on the oven.

2. Select the heating function.
3. Set the temperature above 80 °C.
4. Press ⏲ again and again until the display shows: Heat + Hold.
5. Press OK to confirm.

When the function ends, a signal sounds. The function stays on if you change the heating function.

7.4 Time Extension

The function: Time Extension makes the heating function continue after the end of Duration.

Applicable to all heating functions with Duration or Weight Automatic.

1. When the cooking time ends, a signal sounds. Press any symbol.

The display shows the message.

2. Press ⏲ to turn on or ↩ to cancel.
3. Set the length of the function.
4. Press OK.

8. AUTOMATIC PROGRAMMES

WARNING!
Refer to Safety chapters.

8.1 Recipes online

You can find the recipes for the automatic programmes specified for this appliance on our website. To find the proper Recipe Book check the PNC number on the rating plate on the front frame of the appliance cavity.

8.2 Assisted Cooking with Recipe Automatic

This oven has a set of recipes you can use. The recipes are fixed and you cannot change them.

1. Turn on the oven.
2. Select the menu: Assisted Cooking. Press OK to confirm.
3. Select the category and dish. Press OK to confirm.
4. Select a recipe. Press OK to confirm.

When you use the function: Manual, the oven uses the automatic settings. You can change them as with other functions.

8.3 Assisted Cooking with Weight Automatic

This function automatically calculates the roasting time. To use it, it is necessary to input the food weight.

1. Turn on the oven.
2. Select the menu: Assisted Cooking. Press OK to confirm.
3. Select the category and dish. Press OK to confirm.
4. Press ∧ or ∨ to set the food weight. Press OK to confirm.

The automatic programme starts.

5. You can change the weight at any time. Press ∧ or ∨ to change the weight.
6. When the time ends, a signal sounds. Press any symbol to turns off the signal.

With some programmes turn over the food after 30 minutes. The display shows a reminder.

9. USING THE ACCESSORIES

WARNING!
Refer to Safety chapters.

9.1 Inserting the accessories

Use only suitable cookware and material.

WARNING!
Refer to "Hints and tips" chapter, Microwave suitable cookware and materials.

Wire shelf:

Push the shelf between the guide bars of the shelf support and make sure that the feet point down.

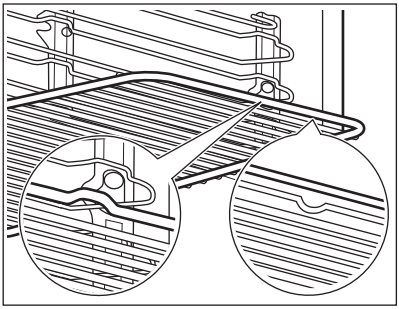

Small indentation at the top increase safety. The indentations are also anti-tip devices. The high rim around the shelf prevents cookware from slipping of the shelf.

10. ADDITIONAL FUNCTIONS

10.1 Favourites

You can save your favourite settings, such as duration, temperature or heating function. They are available in the menu: Favourites. You can save 20 programmes.

You cannot save Microwave and microwave combi functions as favourite programmes.

Saving a programme

1. Turn on the oven.
2. Set a heating function or an automatic programme.
3. Press ◴ again and again until the display shows: SAVE.
4. Press OK to confirm.

The display shows the first free memory position.

5. Press OK to confirm.
6. Enter the name of the programme.

The first letter flashes.

7. Press ∨ or ∧ to change the letter.
8. Press OK.

The next letter flashes.

9. Do step 7 again as necessary.
10. Press and hold OK to save.

You can overwrite a memory position. When the display shows the first free memory position, press ∨ or ∧ and press OK to overwrite an existing programme.

You can change the name of a programme in the menu: Edit Programme Name.

Activating the programme

1. Turn on the oven.
2. Select the menu: Favourites.
3. Press OK to confirm.
4. Select your favourite programme name.
5. Press OK to confirm.

10.2 Using the Child Lock

When the Child Lock is on, the oven cannot be turned on accidentally.

1. Press ⏻ to turn on the display.

2. Press and at the same time until the display shows a message.

To turns off the Child Lock function repeat step 2.

10.3 Function Lock

This function prevents an accidental change of the heating function. You can turn it on only when the oven works.

1. Turn on the oven.
2. Set a heating function or setting.
3. Press again and again until the display shows: Function Lock.
4. Press to confirm.

To turn off the function, press . The display shows a message. Press again and then to confirm.

When you turn off the oven, the function also turns off.

10.4 Set + Go

The function lets you set a heating function (or a programme) and use it later with one press of any symbol.

1. Turn on the oven.
2. Set a heating function.
3. Press again and again until the display shows: Duration.
4. Set the time.
5. Press again and again until the display shows: Set + Go.
6. Press to confirm.

Press any symbol (except for) to start the function: Set + Go. The set heating function starts.

When the heating function ends, a signal sounds.

- Function Lock is on when the heating function works.
- The menu: Basic Settings lets you turn the function: Set + Go on and off.

10.5 Automatic Switch-off

For safety reasons the oven turns off automatically after some time if a heating function works and you do not change any settings.

Temperature (°C)	Switch-off time (h)
30 - 115	12.5
120 - 195	8.5
200 - 230	5.5

The Automatic switch-off does not work with the functions: Light, Duration, End Time.

10.6 Brightness of the display

There are two modes of display brightness:

- Night brightness - when the oven is turned off, the brightness of the display is lower between 10 PM and 6 AM.
- Day brightness:
  - when the oven is turned on.
  - if you touch a symbol during the night brightness (apart from ON / OFF), the display goes back to the day brightness mode for the next 10 seconds.
  - if the oven os turned off and you set the function: Minute Minder. When the function ends, the display goes back to the night brightness.

10.7 Cooling fan

When the oven operates, the cooling fan turns on automatically to keep the surfaces of the oven cool. If you turn off the oven, the cooling fan can continue to operate until the oven cools down.

11. HINTS AND TIPS

WARNING!
Refer to Safety chapters.

The temperature and baking times in the tables are guidelines only. They depend on the recipes and the quality and quantity of the ingredients used.

11.1 Cooking recommendations

Your oven may bake or roast differently to the oven you had before. The below tables provide you with the standard settings for temperature, cooking time and shelf position.

If you cannot find the settings for a special recipe, look for the similar one.

11.2 Microwave recommendations

Place the food on a plate on the bottom of the cavity.

Turn or stir the food halfway through the defrosting and cooking time.

Cover the food for cooking and reheating.

Put the spoon to the bottle or glass when heating drinks to ensure better heat distribution.

Put the food into the oven without any packaging. The packaged ready meals can be put into the oven only when the packaging is microwave safe (check information on the packaging).

Microwave cooking
Cook food covered. If you want to keep a crust cook food without a cover.

Do not overcook the dishes by setting the power and time too high. The food can dry out, burn or cause fire.

Do not use the oven to cook eggs or snails in their shells, because they can burst. Pierce the yolk of fried egg before reheating it.

Pierce food with skin or peel with a fork several times before cooking.

Cut vegetables into similar-sized pieces.

Stir liquid dishes from time to time.

Stir the food before serving.

After you turn off the oven, take the food out and let it stand for a few minutes.

Microwave defrosting
Put the frozen, unwrapped food on a small upturned plate with a container below it, or on a defrosting rack or plastic sieve so that the defrosting liquid can run off.

Remove defrosted pieces subsequently.

To cook fruit and vegetables without defrosting them first, you can use a higher microwave power.

11.3 Microwave suitable cookware and materials

For the microwave use only suitable cookware and materials. Use below table as a reference.

Cookware / Material	Microwave function		Microwave Combi function
	Defrost-ing	Heating, Cooking	
Ovenproof glass and porcelain with no metal components, e.g. heat-proof glass	✓	✓	✓

Cookware / Material	Microwave function		Microwave Combi function
	Defrost-ing	Heating, Cooking	
Non-ovenproof glass and porcelain without any silver, gold, platinum or other metal decorations	✓	X	X
Glass and glass ceramic made of ovenproof / frost-proof material	✓	✓	✓
Ceramic and earthenware without any quartz or metal components and glazes which contain metal	✓	✓	X
Ceramic, porcelain and earthen-ware with unglazed bottom or with small holes, e.g. on handles	X	X	X
Heat-resistant plastic up to 200 °C (please always check the plastic container specification before use)	✓	✓	X
Cardboard, paper	✓	X	X
Clingfilm	✓	X	X
Roasting film with microwave safe closure (please always check the film specification before use)	✓	✓	X
Roasting dishes made of metal, e.g. enamel, cast iron	X	X	✓
Baking tins, black lacquer or sili-con-coated (please always check the baking tins specification before use)	X	X	✓
Wire shelf	X	X	✓
Cookware for microwave use, e.g. crisp pan	X	✓	X

11.4 Grill

- Always grill with the maximum temperature setting.
- Set the shelf into the shelf position as recommended in the grilling table.
- Always set the pan to collect the fat into the first shelf position.
- Grill only flat pieces of meat or fish.
- Always preheat the empty oven with the grill functions for 5 minutes.

CAUTION!
Always grill with the oven door closed.

Grill

Food	Temperature (°C)	Time (min)		Shelf position
		1st side	2nd side	
Roast beef, medium	210 - 230	30 - 40	30 - 40	1
Filet of beef, medium	230	20 - 30	20 - 30	1
Back of pork	210 - 230	30 - 40	30 - 40	1
Back of veal	210 - 230	30 - 40	30 - 40	1
Back of lamb	210 - 230	25 - 35	20 - 35	1
Whole Fish, 500 - 1000 g	210 - 230	15 - 30	15 - 30	1

11.5 Microwave cooking

Tips for the Microwave

Cooking/Defrosting results	Possible cause	Remedy
The food is too dry.	The power was too high. The time was too long.	Next time select a lower power and a longer time.
The food is still not defrosted, hot or cooked after the end of cooking time.	The time was too short.	Set a longer time. Do not increase the microwave power.
The food is overheated at the edges but is still not ready in the middle.	The power was too high.	Next time select a lower power and a longer time.

Defrosting meat

Food	Power (Watts)	Time (min)	Standing time (min)
Steak (0.2 kg)	100	5 - 7	5 - 10
Minced meat (0.5 kg)	100	10 - 15	5 - 10

Defrosting poultry

Food	Power (Watts)	Time (min)	Standing time (min)
Chicken (1 kg)	100	25 - 30	10 - 20
Chicken breast (0.15 kg)	100	3 - 5	10 - 15
Chicken legs (0.15 kg)	100	3 - 5	10 - 15

Defrosting fish

Food	Power (Watts)	Time (min)	Standing time (min)
Whole Fish (0.5 kg)	100	10 - 15	5 - 10
Fish fillets (0.5 kg)	100	12 - 15	5 - 10

Defrosting dairy products

Food	Power (Watts)	Time (min)	Standing time (min)
Butter (0.25 kg)	100	3 - 4	5 - 10
Grated cheese (0.2 kg)	100	2 - 3	10 - 15

Defrosting cakes / pastries

Food	Power (Watts)	Time (min)	Standing time (min)
Yeast cake (1 piece)	200	2 - 3	15 - 20
Cheesecake (1 piece)	100	2 - 4	15 - 20
Dry cake (e.g. Pound cake) (1 piece)	200	2 - 4	15 - 20
Bread (1 kg)	200	15 - 20	5 - 10
Sliced bread (0,2 kg)	200	3 - 5	5 - 10
Bread rolls (4 pieces)	200	2 - 4	2 - 5

Defrosting fruit

Food	Power (Watts)	Time (min)	Standing time (min)
Fruit (0.25 kg)	100	5 - 10	10 - 15

Reheating

Food	Power (Watts)	Time (min)	Standing time (min)
Baby food in jars (0.2 kg)	300	1 - 2	-
Baby milk (180 ml); Put spoon into the bottle	600	0:20 - 0:40	-
Convenience food (0.5 kg)	600	6 - 9	2 - 5
Frozen ready meals (0.5 kg)	400	10 - 15	2 - 5
Milk (200 ml)	1000	1 - 1:30	-
Water (200 ml)	1000	1:30 - 2	-

Food	Power (Watts)	Time (min)	Standing time (min)
Sauce (200 ml)	600	1 - 3	-
Soup (300 ml)	600	3 - 5	-

Melting

Food	Power (Watts)	Time (min)	Standing time (min)
Chocolate / Chocolate coating (0.15 kg)	300	2 - 4	-
Butter (0.1 kg)	400	0:30-1:30	-

Cooking

Food	Power (Watts)	Time (min)	Standing time (min)
Whole fish (0.5 kg)	500	8 - 10	2 - 5
Fish fillets (0.5 kg)	400	4 - 7	2 - 5
Vegetables, fresh (0.5 kg + 50 ml of water)	600	5 - 15	-
Vegetables, frozen (0.5 kg + 50 ml of water)	600	10 - 20	-
Jacked potatoes (0.5 kg)	600	7 - 10	-
Rice (0.2 kg + 400 ml of water)	600	15 - 18	-
Popcorn	1000	1:30 - 3	-

Microwave Combi function
Use this function to cook food in a shorter time and to brown it.

Combine functions: Grill and Microwave.

Food	Ovenware	Power (Watts)	Temperature (°C)	Time (min)	Shelf position	Standing time (min)
2 chicken halves (2 x 0.55 kg)	Round glass dish, Ø 26 cm	300	220	40	2	5
Au gratin potatoes (1 kg)	Gratin dish	300	200	40	2	10
Roast pork neck (1.1 kg)	Glass dish with strainer	300	200	70	1	10

11.6 Examples of cooking applications for power settings

The data in the table is for guidance only.

Power setting	Use
• 1000 Watt • 900 Watt • 800 Watt • 700 Watt	Heating liquids Searing at the start of the cooking process Cooking vegetables
• 600 Watt • 500 Watt	Defrosting and heating frozen meals Heating one-plate meals Simmering stews Cooking egg dishes
• 400 Watt • 300 Watt	Continuing to cook meals Cooking delicate food Heating baby food Simmering rice Heating delicate food Melting cheese, chocolate, butter
• 200 Watt • 100 Watt	Defrosting meat, fish Defrosting cheese, cream, butter Defrosting fruit and cakes Defrosting bread

11.7 Information for test institutes

Microwave function

Tests according to IEC 60705.

Food	Power (Watts)	Quantity (kg)	Shelf position 1)	Time (min)	Comments
Sponge cake	600	0.475	Bottom	8 - 9	Turn container around by 1/4, halfway through the cooking time.
Meatloaf	400	0.9	1	25 - 27	Turn container around by 1/4, halfway through the cooking time.
Egg custard	300	1	2	30 - 33	Turn container around by 1/4, halfway through the cooking time.

Food	Power (Watts)	Quantity (kg)	Shelf position 1)	Time (min)	Comments
Meat defrosting	100	0.5	1	15	Turn the meat upside down halfway through the cooking time.

1) Use wire shelf unless otherwise specified.

Microwave Combi function

Tests according to IEC 60705.

Food	Function	Power (Watts)	Quantity (kg)	Temperature (°C)	Shelf position 1)	Time (min)	Comments
Potato gratin	Grill + MW	300	1.1	160	2	44 - 46	Turn container around by 1/4, halfway through the cooking time.
Chicken	Grill + MW	400	1.1	200	2	44 - 46	Put the meat in round glass container and turn it upside down halfway through the cooking time.

1) Use wire shelf unless otherwise specified.

12. CARE AND CLEANING

WARNING!
Refer to Safety chapters.

12.1 Notes on cleaning

Clean the front of the oven with a soft cloth with warm water and a mild cleaning agent.

To clean metal surfaces, use a dedicated cleaning agent.

Clean the oven interior after each use. Fat accumulation or other food remains may result in a fire.

Clean the cavity roof carefully from food residuals and fat.

Clean all accessories after each use and let them dry. Use a soft cloth with warm water and a cleaning agent.

Clean stubborn dirt with a special oven cleaner.

If you have nonstick accessories, do not clean them using aggressive agents, sharp-edged objects or a dishwasher. It can cause damage to the nonstick coating.

Clean the moisture from the cavity after each use.

12.2 Removing the shelf supports

Before maintenance, make sure that the oven is cool. There is a risk of burns.

To clean the oven, remove the shelf supports.

1. Pull carefully the supports up and out of the front catch.

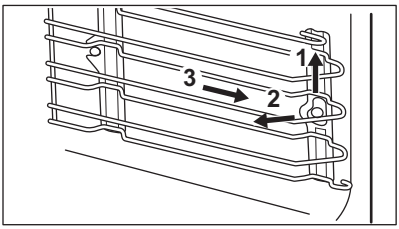

2. Pull the front end of the shelf support away from the side wall.
3. Pull the supports out of the rear catch.

Install the shelf supports in the opposite sequence.

12.3 Replacing the lamp

WARNING!
Risk of electric shock.
The lamp can be hot.

1. Turn off the oven.

Wait until the oven is cooled down.

2. Disconnect the oven from the mains.
3. Put a cloth on the bottom of the cavity.

CAUTION!
Always hold the halogen lamp with a cloth to prevent grease residue from burning on the lamp.

The top lamp

1. Turn the lamp glass cover to remove it.
2. Clean the glass cover.
3. Replace the lamp with a suitable 300 °C heat-resistant lamp.
4. Install the glass cover.

13. TROUBLESHOOTING

WARNING!
Refer to Safety chapters.

13.1 What to do if...

Problem	Possible cause	Remedy
You cannot activate or operate the oven.	The oven is not connected to an electrical supply or it is connected incorrectly.	Check if the oven is correctly connected to the electrical supply (refer to the connection diagram if available).
The oven does not heat up.	The oven is deactivated.	Activate the oven.
The oven does not heat up.	The clock is not set.	Set the clock.

Problem	Possible cause	Remedy
The oven does not heat up.	The necessary settings are not set.	Make sure that the settings are correct.
The oven does not heat up.	The automatic switch-off is activated.	Refer to "Automatic switch-off".
The oven does not heat up.	The Child Lock is on.	Refer to "Using the Child Lock".
The oven does not heat up.	The door is not closed correctly.	Fully close the door.
The oven does not heat up.	The fuse is blown.	Make sure that the fuse is the cause of the malfunction. If the fuse is blown again and again, contact a qualified electrician.
The lamp does not operate.	The lamp is defective.	Replace the lamp.
The display shows an error code that is not in this table.	There is an electrical fault.	• Deactivate the oven with the house fuse or the safety switch in the fuse box and activate it again. • If the display shows the error code again, contact the Customer Care Department.
Steam and condensation settle on the food and in the cavity of the oven.	You left the dish in the oven for too long.	Do not leave the dishes in the oven for longer than 15 - 20 minutes after the cooking process ends.

13.2 Service data

If you cannot find a solution to the problem yourself, contact your dealer or an Authorised Service Centre.

The necessary data for the service centre is on the rating plate. The rating plate is on the front frame of the oven cavity. Do not remove the rating plate from the oven cavity.

We recommend that you write the data here:	
Model (MOD.)	.....
Product number (PNC)	.....
Serial number (S.N.)	.....

14. ENERGY EFFICIENCY

14.1 Energy saving



The oven contains features which help you save energy during everyday cooking.

General hints
Make sure that the oven door is closed properly when the oven operates. Do not open the door too often during cooking. Keep the door gasket clean and make sure it is well fixed in its position.

Use metal dishes to improve energy saving, but only when you use a non-microwave function.

When possible, do not preheat the oven before you put the food inside.

When the cooking duration is longer than 30 minutes, reduce the oven temperature to minimum 3 - 10 minutes before the end of the cooking time, depending on the duration of the cooking. The residual heat inside the oven will continue to cook.

Use the residual heat to warm up other dishes.

Keep breaks between baking as short as possible when you prepare few dishes at one time.

Residual heat
If a programme with the Duration or End Time selection is activated and the cooking time is longer than 30 minutes, the heating elements automatically deactivate earlier in some oven functions.

The lamp continues to operate.

Keep food warm
Choose the lowest possible temperature setting to use residual heat and keep a meal warm. The residual heat indicator or temperature appears on the display.

Cooking with the lamp off
Turn off the lamp during cooking. Turn it on only when you need it.

15. ENVIRONMENTAL CONCERNS

Recycle materials with the symbol ♺. Put the packaging in relevant containers to recycle it. Help protect the environment and human health by recycling waste of electrical and electronic appliances. Do not dispose of appliances marked with the symbol with the household waste. Return the product to your local recycling facility or contact your municipal office.

www.electrolux.com/shop



867302631-D-472017

CE