DAEWOO ELECTRONICS

MICROWAVE OVEN

KOR-6A0RC / KOR-6A0RR

OPERATING INSTRUCTIONS
& COOK BOOK

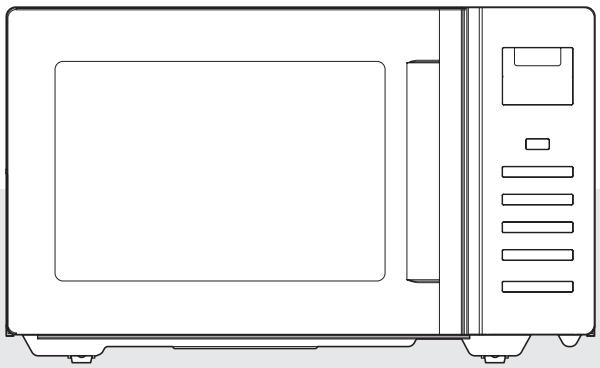

HOW TO TURN ON THE OVEN AT FIRST

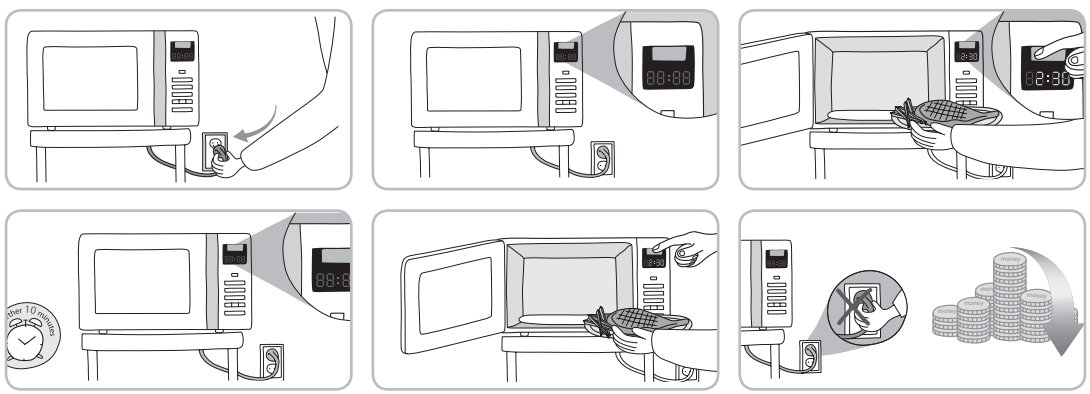

Customer Helpline number: 0844 887 2525

Before operating this oven, please read these instructions completely.

PRECAUTIONS TO AVOID POSSIBLE EXPOSURE TO EXCESSIVE MICROWAVE ENERGY

(a) Do not attempt to operate this oven with the door open since open-door operation can result in harmful exposure to microwave energy. It is important not to defeat or tamper with the safety interlocks.

(b) Do not place any object between the oven front face and the door or allow soil or cleaner residue to accumulate on sealing surfaces.

(c) WARNING : If the door or door seals are damaged, the oven must not be operated until it has been repaired by a competent person : (1) door (bent), (2) hinges and latches(broken or loosened), (3) door seals and sealing surfaces.

(d) WARNING : It is hazardous for anyone other than a competent person to carry out any service or repair operation that involves the removal of a cover which gives protection against exposure to microwave energy.

(e) WARNING : Liquids and other foods must not be heated in sealed containers since they are liable to explode.

(f) WARNING : This appliance can be used by children aged from 8 years and above and persons with reduced physical, sensory or mental capabilities or lack of experience and knowledge if they have been given supervision or instruction concerning use of the appliance in a safe way and understand the hazards involved. Children shall not play with the appliance. Cleaning and user maintenance shall not be made by children unless they are aged from 8 years and above and supervised.

DESUK_KOR-6A0RC,KOR-6A0RR_KOR-6L8K5S90(영).indd 1 16. 10. 21. 오전 10:40

TABLE OF CONTENTS

- PRECAUTIONS TO AVOID POSSIBLE EXPOSURE TO EXCESSIVE MICROWAVE ENERGY 1
- IMPORTANT SAFETY INSTRUCTIONS 3
- EARTHING INSTRUCTIONS 5
- INSTALLATION 5
- FEATURES DIAGRAM 6
- FEATURES DIAGRAM (CONTINUED) 7
- OPERATION PROCEDURE 8
- CONTROLS 9

TURNING AC POWER ON & OFF THE OVEN 9
WEIGHT DEFROSTING 10
TIME DEFROSTING 10
COOKING IN ONE STAGE 11
COOKING IN TWO STAGE 12
+30 sec 13
ONE TOUCH COOKING 13
AUTO COOK 14
HOW TO STOP THE OVEN WHILE THE OVEN IS OPERATING 15
TO SET STANDBY POWER "0" MODE 15

- CARE OF YOUR MICROWAVE OVEN 16
- QUESTIONS AND ANSWERS 17
- BEFORE YOU CALL FOR SERVICE 18
- CARE AND CLEANING 18
- SPECIFICATIONS 19
- COOKING INSTRUCTIONS 20
- USE YOUR MICROWAVE OVEN SAFELY 21
- ARCING 21
- MICROWAVING PRINCIPLES 22
- HOW MICROWAVES COOK FOOD 22
- CONVERSION CHARTS 22
- COOKING TECHNIQUES 23
- DEFROSTING GUIDE 24
- COOKING & REHEATING CHART 25
- VEGETABLE CHART 27

DESUK_KOR-6A0RC,KOR-6A0RR_KOR-6L8K5S90(영).indd 2 16. 10. 21. 오전 10:40

IMPORTANT SAFETY INSTRUCTIONS

READ CAREFULLY AND KEEP FOR FUTURE REFERENCE

WARNING : To prevent fire, burns, electric shock and other warnings:

Listed below are, as with all appliances, certain rules to follow and safeguards to assure high performance from this oven:

1. Do not use the oven for any reason other than food preparation, such as for drying clothes, paper, or any other nonfood items or for sterilizing purposes.
2. Do not use the oven when empty, this could damage the oven.
3. Do not use the oven cavity for any type of storage, such as papers, cookbook, cookware, etc.
4. Do not operate the oven without the glass tray in place. Be sure it is properly sitting on the rotating base.
5. Make sure you remove caps or lids prior to cooking when you cook food sealed in bottles.
6. Do not put foreign material between the oven surface and door. It could result in excessive leakage of microwave energy.
7. Do not use recycled paper products for cooking. They may contain impurities which could cause sparks and/or fires when used during cooking.
8. Do not pop popcorn unless popped in a microwave approved popcorn popper or unless it's commercially packaged and recommended especially for microwave ovens. Microwave popped corn produces a lower yield than conventional popping; there will be a number of unpopped kernels. Do not use oil unless specified by the manufacturer.
9. Do not cook any food surrounded by a membrane, such as egg yolks, potatoes, chicken livers, etc., without first piercing them several times with a fork.
10. Do not pop popcorn longer than the manufacturer's directions. (popping time is generally below 3 minutes). Longer cooking does not yield more popped corn, it can cause scorchings and fire.

    Also, the cooking tray can become too hot to handle or may break.
11. If smoke is observed, switch off or unplug the appliance and keep the door closed in order to stifle any flames.
12. When heating food in plastic or paper containers, keep an eye on the oven due to the possibility of ignition.

DESUK_KOR-6A0RC,KOR-6A0RR_KOR-6L8K5S90(영).indd 3 16. 10. 21. 오전 10:40

13. The contents of feeding bottles and baby food jars shall be stirred or shaken and the temperature checked before consumption, in order to avoid burns.
14. Always test the temperature of food or drink which has been heated in a microwave oven before you give it to somebody, especially to children or elderly people. This is important because things which have been heated in a microwave oven carry on getting hotter even though the microwave oven cooking has stopped.
15. Eggs in their shell and whole hard-boiled eggs should not be heated in microwave ovens since they may explode, even after microwave heating has ended;
16. Keep the waveguide cover clean at all times. Wipe the oven interior with a soft damp cloth after each use. If you leave grease or fat anywhere in the cavity it may overheat, smoke or even catch fire when next using the oven.
17. Never heat oil or fat for deep frying as you cannot control the temperature and doing so may lead to overheating and fire.
18. Liquids, such as water, coffee, or tea are able to be overheated beyond the boiling point without appearing to be boiling due to surface tension of the liquid. Visible bubbling or boiling when the container is removed from the microwave oven is not always present. THIS COULD RESULT IN VERY HOT LIQUIDS SUDDENLY BOILING OVER WHEN A SPOON OR OTHER UTENSIL IS INSERTED INTO THE LIQUID.
    To reduce the risk of injury to persons:
    a) Do not overheat the liquid.
    b) Stir the liquid both before and halfway through heating it
    c) Do not use straight-sided containers with narrow necks.
    d) After heating, allow the container to stand in the microwave oven for a short time before removing the container.
    e) Use extreme care when inserting a spoon or other utensil into the container.
19. Children should be supervised to ensure that they do not play with the appliance.
20. Only use utensils that are suitable for use in microwave ovens.
21. Microwave heating of beverages can result in delayed eruptive boiling, therefore care must be taken when handling the container.

SAVE THESE INSTRUCTIONS

DESUK_KOR-6A0RC,KOR-6A0RR_KOR-6L8K5S90(영).indd 4 16. 10. 21. 오전 10:40

EARTHING INSTRUCTIONS

This appliance must be earthed. In the event of an electrical short circuit, earthing reduces the risk of electric shock by providing an escape wire for the electric current. This appliance is equipped with a cord having a earthing wire with a earthing plug. The plug must be plugged into an outlet that is properly installed and earthed.

WARNING : Improper use of the earthing plug can result in a risk of electric shock. Consult a qualified electrician or serviceman if the earthing instructions are not completely understood, or if doubt exists as to whether the appliance is properly earthed.
If it is necessary to use an extension cord, use only a 3-wire extension cord that has a 3-blade earthing plug, and a 3-slot receptacle that will accept the plug on the appliance. The marked rating of the extension cord should be equal to or greater than the electrical rating of the appliance.

IMPORTANT
The wires in this mains lead fitted to this appliance are colored in accordance with the following code.
Green-and-yellow : Earth
Blue : Neutral
Brown : Live
As the colors of the wires in the mains lead of this appliance may not correspond with the colored markings identifying the terminals in your plug, proceed as follows : the wire which is colored green-and-yellow must be connected to the terminal in the plug which is marked with the letter 'E' or by the earth symbol or green-and-yellow. The wire which is colored blue must be connected to the terminal which is marked with the letter 'N' or colored white. The wire which is colored brown must be connected to the terminal which is marked with the letter 'L' or colored red.
WARNING : The appliance must be earthed.

INSTALLATION

1. Ventilation
Do not block air vents. If they are blocked during operation, the oven may overheat and eventually cause a failure. For proper ventilation, allow above 76mm of space between oven sides, rear and the minimum height of free space necessary above the top surface of the oven is 100mm.

2. Steady, flat location
This oven should be set on a steady, flat surface. This oven is designed for counter top use only. The microwave oven shall not be placed in a cabinet unless it has been tested in a cabinet.

3. Leave space behind and side
All air vents should be kept a clearance. If all vents are covered during operation, the oven may overheat and, eventually, oven failure.

4. Away from radio and TV sets
Poor television reception and radio interference may result if the oven is located close to a TV, Radio antenna, feeder and so on. Position the oven as far from them as possible.

5. Away from heating appliance and water taps
Keep the oven away from hot air, steam or Splash when choosing a place to position it, or the insulation might be adversely affected and breakdowns occur.

6. Power supply
- Check your local power source. This oven requires a current of approximately 6 amperes, 230V 50Hz.
- Power supply cord is about 0.8 meters long.
- The voltage used must be the same as specified on this oven. Using a higher voltage may result in a fire or other accident causing oven damage. Using low voltage will cause slow cooking. We are not responsible for damage resulting from use of this oven with a voltage of ampere fuse other than those specified.
- If the supply cord is damaged, it must be replaced by the manufacturer or its service agent or a similarly qualified person in order to avoid a hazard.

7. Examine the oven after unpacking for any damage such as:
A misaligned door, Broken door, A dent in cavity. If any of the above are visible, DO NOT INSTALL, and notify dealer immediately.

8. Do not operate the oven if it is colder than room temperature.
(This may occur during delivery in cold weather.) Allow the oven to become room temperature before operating.

DESUK_KOR-6A0RC,KOR-6A0RR_KOR-6L8K5S90(영).indd 5 16. 10. 21. 오전 10:40

FEATURES DIAGRAM

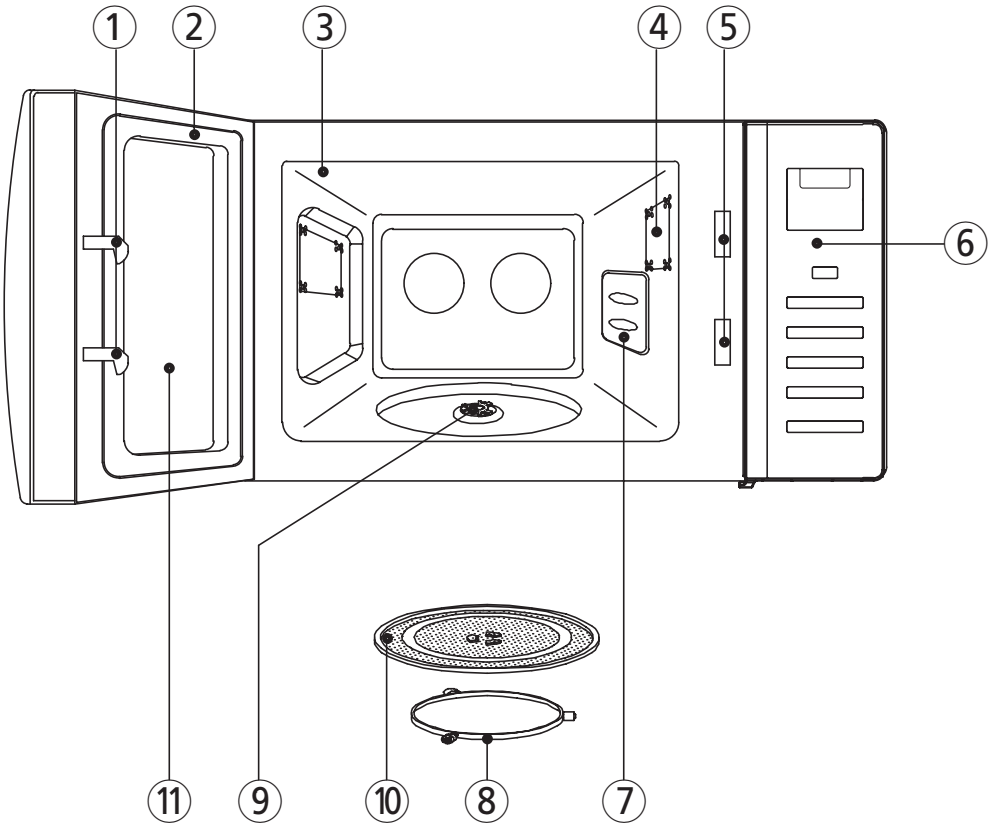

① **Door latch -** When the door is closed, it will automatically shut off. If the door is opened while the oven is operating, the magnetron will automatically shut off.

② **Door seal -** The door seal surfaces prevent microwaves escaping from the oven cavity.

③ **Oven cavity**

④ **Oven lamp -** Automatically turns on during oven operating.

⑤ **Safety interlock system**

⑥ **Control panel**

⑦ **Waveguide cover -** Protects the microwave outlet from splashes of cooking foods.

⑧ **Roller guide -** This must always be used for cooking together with the glass cooking tray.

⑨ **Coupler-** This fits over the shaft in the center of the oven cavity floor.
This is to remain in the oven for all cooking.

⑩ **Glass cooking tray -** Made of special heat resistant glass. The tray must always be in proper position before operating. Do not cook food directly on the tray.

⑪ **Viewing screen -** Allows viewing of food. The screen is designed so that light can pass through, but not the microwave.

DESUK_KOR-6A0RC,KOR-6A0RR_KOR-6L8K5S90(영).indd 6 16. 10. 21. 오전 10:40

FEATURES DIAGRAM (continued)

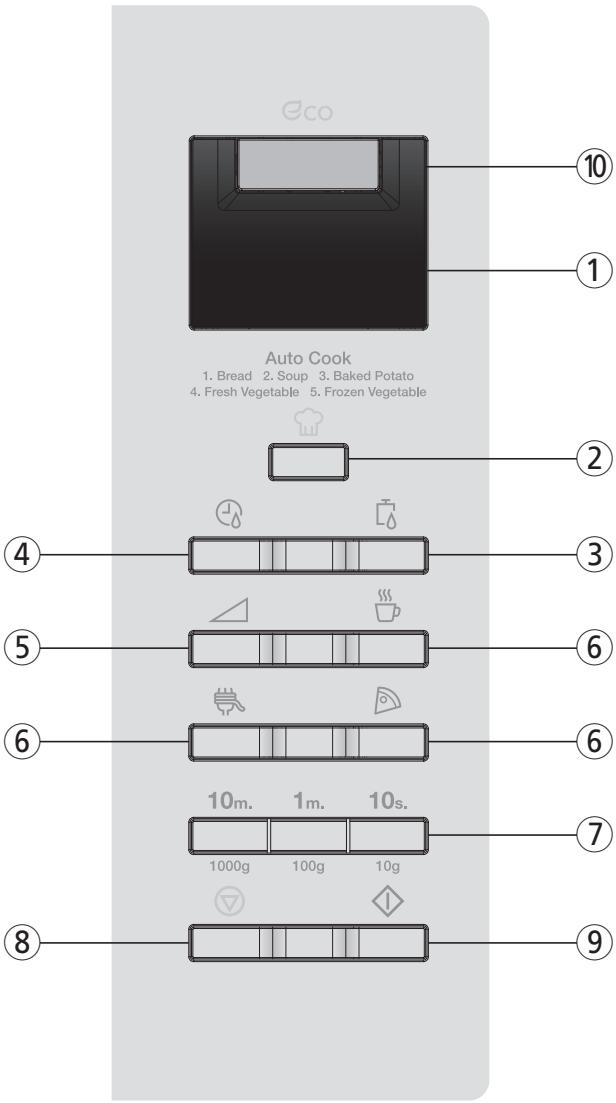

① **DISPLAY -** Cooking time, power level are displayed.

② **AUTO COOK -** Used to cook or reheat many of favorite food.

③ **WEIGHT DEFROST -** Used to defrost foods for weight.

④ **TIME DEFROST -** Used to defrost foods for time.

⑤ **POWER -** Used to set power level.

⑥ **ONE TOUCH COOK -** Used to cook or reheat specific quantities of food.

⑦ **TIME SET BUTTON -** Used to set the cooking time and weight.

⑧ **STOP/CLEAR -** Used to stop the oven operation or to delete the cooking data.

⑨ **START/+30 SEC -** Used to start the oven and also used to set a reheat time.

⑩ Eco **-** Used to turn the AC power on the oven.

DESUK_KOR-6A0RC,KOR-6A0RR_KOR-6L8K5S90(영).indd 7 16. 10. 21. 오전 10:40

OPERATION PROCEDURE

This section includes useful information about oven operation.

1 Plug power supply cord into 230V AC 50Hz power outlet.

2 Press eco button until beep sounds and display is turned on.

3 After placing the food in a suitable container,open the oven door and put it on the glasstray. The glass tray and roller guide mustalways be in place during cooking.

4 Close the door. Make sure that it is firmly closed.

5 The oven door can be opened at any time during operation by pushing the door open button. The oven will automatically shut off. To restart the oven, close the door and then push the START button.

6 The oven automatically cooks on full power unless set to a lower power level.

7 The display will show " : 0" when the oven is plugged in, press and hold Eco button until display is turned on and beep sounds.

8 Display will be returned to the " : 0 " when the cooking time ends.

9 When the STOP/CLEAR button is pushed during the oven operation, the oven stops cooking and all information retained. To erase all information, push the STOP/CLEAR button once more.
If the oven door is opened during the oven operation, all information is retained.

10 If the START button is pushed and the oven does not operate, check the area between the door and door seal for obstructions and make sure the door is closed securely. The oven will not start cooking until the door is completely closed or the program has been reset.

11 Display turns off after 10 minutes.

Make sure the oven is properly installed and plugged into the electrical outlet.

WATTAGE OUTPUT CHART

• The power-level is set by push the Power button. The chart shows the display, the power level and the percentage of power.

Push the Power button	Power level (Display)	Approximate Percentage of Power
once	P-HI	100%
twice	P-90	90%
3 times	P-80	80%
4 times	P-70	70%
5 times	P-60	60%
6 times	P-50	50%
7 times	P-40	40%
8 times	P-30	30%
9 times	P-20	20%
10 times	P-10	10%
11 times	P-00	0%

DESUK_KOR-6A0RC,KOR-6A0RR_KOR-6L8K5S90(영).indd 8 16. 10. 21. 오전 10:40

CONTROLS

TURNING AC POWER ON & OFF THE OVEN

When the oven is first plugged in , the display will show nothing.



1. Press and hold Eco button until display is turned on and beep sounds.
   The oven is turned AC power on.

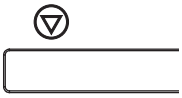

2. Press and hold STOP/CLEAR button until display is turned off.
   The oven is turned off and will use no power.

NOTE: If the mains power goes off the display disappears until the power comes back on and the Eco button is pressed and held until a beep sounds.
The oven is automatically powered off if not used for 10 Minutes.

DESUK_KOR-6A0RC,KOR-6A0RR_KOR-6L8K5S90(영).indd 9 16. 10. 21. 오전 10:40

WEIGHT DEFROSTING

When WEIGHT DEFROST is selected, the automatic cycle divides the defrosting time into periods of alternating defrost and stand times by cycling on and off.

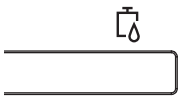

1. Push the WEIGHT DEFROST button.

The display will show you " 0" .

2. Push the TIME SET buttons for inputing the desired weights.

The display will show you what you pushed.

3. Push the START button.

NOTE: Your oven can be programmed for 200g~3000g in Weight defrosting mode.

The defrosting time is automatically determined by the weight inputed.
When you push the START button, the display counts down the time to show you how much defrosting time is left. The oven beeps during the defrosting cycle to signal that the food needs to be turn over or rearranged. When the defrosting ends, you will hear 3 beeps.

TIME DEFROSTING

When TIME DEFROST is selected, the automatic cycle divides the defrosting time into periods of alternating defrost and stand times by cycling on and off.

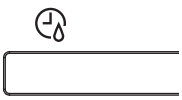

1. Push the TIME DEFROST button.

The display will show you " : 0" .

2. Push the TIME SET buttons for inputing the desired time.

The display will show you what you pushed.

3. Push the START button.

NOTE: Your oven can be programmed for 59minutes 90seconds.(59:90).

When you push the START button, the display counts down the time to show you how much defrosting time is left. The oven beeps during the defrosting cycle to signal that the food needs to be turn over or rearranged. When the defrosting ends, you will hear 3 beeps.

DESUK_KOR-6A0RC,KOR-6A0RR_KOR-6L8K5S90(영).indd 10 16. 10. 21. 오전 10:40

COOKING IN ONE STAGE

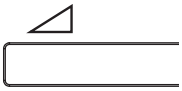

1. Push the POWER button. (Select the desired power level.)

The display will show what you pushed

NOTE: If step 1 is omitted, the oven will cook at full power.

2. Push the TIME SET buttons for the cooking time.

The display will show what you pushed

3. Push the START button.

NOTE: Your oven can be programmed for 59 minutes 90 seconds. (59 : 90)
Using lower power levels increases the cooking time which is recommended for foods such as cheese, milk and slow cooking of meats.

When you push the START button, the display counts down the time to show how much cooking time is left.

DESUK_KOR-6A0RC,KOR-6A0RR_KOR-6L8K5S90(영).indd 11 16. 10. 21. 오전 10:40

COOKING IN TWO STAGE

All recipes require frozen foods to be defrosted fully before cooking. This oven can be programmed to automatically defrost food before cooking.

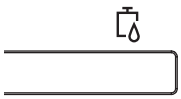

1. Push the WEIGHT DEFROST button.

2. Push the TIME SET buttons for the defrosting weight you want. — The display will show what you selected

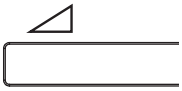

X6

3. Push the POWER button. (Select desired power level.) — "P-HI" is displayed. The display will show what you selected. This example shows power level 5.

4. Push the TIME SET buttons for desired cooking time. — The display will show what you selected

5. Push the START button.

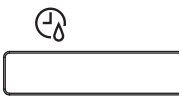

1. Push the TIME DEFROST button.

2. Push the TIME SET buttons for the defrosting time you want. — The display will show what you selected

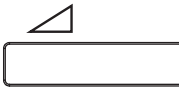

X6

3. Push the POWER button. (Select desired power level.) — "P-HI" is displayed. The display will show what you selected. This example shows power level 5.

4. Push the TIME SET buttons for desired cooking time. — The display will show what you selected

5. Push the START button.

The display counts down the time remaining in WEIGHT or TIME DEFROST mode. Halfway through defrosting time, turn over, break apart and/or redistribute the food. At the end of WEIGHT or TIME DEFROST mode, the oven will start M/W cook. The display counts down the time remaining in M/W cook.
When the defrost cook is going on, if you push the weight or time defrost button, the display shows you "DEF" in 3 seconds.
When the defrost or MW COOK is going on, if you push the POWER button, the display shows you the current power level in 3 seconds.

DESUK_KOR-6A0RC,KOR-6A0RR_KOR-6L8K5S90(영).indd 12 16. 10. 21. 오전 10:40

+30 sec

+30 sec allows you to reheat for 30 seconds at 100% (full power) by simply pushing the +30 sec button. By repeatedly pushing the +30 sec button, you can also extend reheating time to 5 minutes by 30 second increments.



1. Push the +30 sec button.

When you push the +30 sec button, ":30" is displayed, and the oven starts reheating

ONE TOUCH COOKING

One touch cooking allows you to cook or reheat many of your favorite foods by pushing just one button. To increase quantity, push the chosen button until the number in the display is same as desired quantity to cook.



1. Push the BEVERAGE button once for 1 cup, twice for 2 cups or three times for 3 cups.

When you push the BEVERAGE button once, "1" is displayed. After 1.5 seconds, the display is changed into cooking time and the oven starts cooking.

*** BEVERAGE *** (200 ml/cup)
- 1 cup (mug) : Push the BEVERAGE button once.
- 2 cups (mugs): Push the BEVERAGE button twice within 1.5 seconds.
- 3 cups (mugs): Push the BEVERAGE button three times within 1.5 seconds.

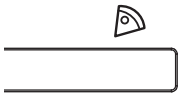

1. Push the FROZEN PIZZA button once for 200g pizza or twice for 400g pizza.

When you push the FROZEN PIZZA button once, "200" is displayed. After 1.5 seconds, the display is changed into the cooking time and the oven start cooking

*** FROZEN PIZZA ***
- 200g : Push the FROZEN PIZZA button once.
- 400g : Push the FROZEN PIZZA button twice within 1.5 seconds.

NOTE: 1. Use only one frozen pizza at a time
2. Use only frozen pizza made for microwave ovens.
3. If the cheese of frozen pizza does not melt sufficiently, cook a few seconds longer.
4. Some brands of frozen pizza may require more or less cooking time.

DESUK_KOR-6A0RC,KOR-6A0RR_KOR-6L8K5S90(영).indd 13 16. 10. 21. 오전 10:40



1. Push the PASTA button once for 1 serving of pasta or twice for 2 servings of pasta

When you push the PASTA once, “1” is displayed. After 1.5 seconds, the display is changed into cooking time and the oven starts cooking.

*** PASTA ***
- 1 serving: Push the PASTA button once.
- 2 serving: Push the PASTA button twice within 1.5 seconds.

AUTO COOK

AUTO COOK allows you to cook or reheat many of your favorite foods by repeatedly pushing the AUTO COOK button.
When you push the AUTO COOK button once, “AC-1” will be displayed. By repeatedly pushing this button, you can select other food category as shown in below.



1. Push the AUTO COOK button once for 4PCS of BREAD. AC-1 will be displayed.

2. Push the AUTO COOK button twice for 350g of SOUP. AC-2 will be displayed.

3. Push the AUTO COOK button three times for 3ea of BAKED POTATO. AC-3 will be displayed.

4. Push the AUTO COOK button four times for 200g of FRESH VEGETABLE. AC-4 will be displayed.

5. Push the AUTO COOK button five times for 200g. of FROZEN VEGETABLE. AC-5 will be displayed.

Then push the START button. The display will be changed into cooking time of quantity and the oven starts cooking.

DESUK_KOR-6A0RC,KOR-6A0RR_KOR-6L8K5S90(영).indd 14 16. 10. 21. 오전 10:40

HOW TO STOP THE OVEN WHILE THE OVEN IS OPERATING

1. Push the STOP/CLEAR button.
   • You can restart the oven by pushing the START button.
   • Push the STOP/CLEAR once more to erase all instructions.
   • You must enter in new instructions.

2. Open the door.
   • You can restart the oven by closing the door and pushing the START button.

NOTE: Oven stops operating when door is opened.

TO SET STANDBY POWER "0" MODE

1. Push the STOP/CLEAR button.
   " :0" appears in the display.

2. Press and hold the STOP/CLEAR button until display is turned off.

3. To cancel STANDBY POWER "0" mode, press and hold Eco button until display is turned on and beep sounds.
   The oven is again available for normal use.

DESUK_KOR-6A0RC,KOR-6A0RR_KOR-6L8K5S90(영).indd 15 16. 10. 21. 오전 10:40

CARE OF YOUR MICROWAVE OVEN

The oven should be cleaned regularly and any food deposits removed.
Failure to maintain the oven in a clean condition could lead to deterioration of the surface that could adversely affect the life of the appliance and possibly result in a hazardous situation.

1. Turn the oven off before cleaning.
2. Keep the inside of the oven clean. When food spatters or spilled liquids adhere to oven walls, wipe with a damp cloth. Mild detergent may be used if the oven gets very dirty.
   The use of harsh detergent or abrasives is not recommended.
3. The outside oven surface should be cleaned with soap and water, rinsed and dried with a soft cloth. To prevent damage to the operating parts inside the oven, water should not be allowed to seep into the ventilation openings.
4. If the Control Panel becomes wet, clean with a soft, dry cloth. Do not use harsh detergents or abrasives on Control Panel.
5. If steam accumulates inside or around the outside of the oven door, wipe with a soft cloth. This may occur when the microwave oven is operated under high humidity conditions and in no way indicates malfunction of the unit.
6. It is occasionally necessary to remove the glass tray for cleaning. Wash the tray in warm sudsy water or in a dishwasher.
7. The roller guide and oven cavity floor should be cleaned regularly to avoid excessive noise. Simply wipe the bottom surface of the oven with mild detergent water or window cleaner and dry. The roller guide may be washed in mild sudsy water.

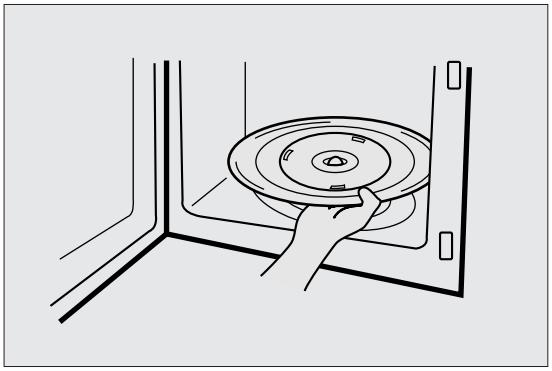

ROLLER GUIDE

1. The ROLLER GUIDE and oven floor should be cleaned frequently to prevent excessive noise.
2. The ROLLER GUIDE MUST ALWAYS be used for cooking together with the Glass Tray.

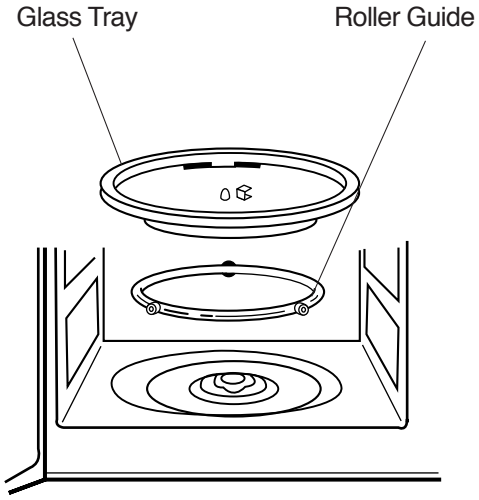

GLASS TRAY

1. DO NOT operate the oven without the Glass Tray in place.
2. DO NOT use any other Glass Tray with this oven.
3. If Glass Tray is hot, ALLOW TO COOL before cleaning or placing it in water.
4. DO NOT cook directly on the Glass Tray. (Except for popcorn)

DESUK_KOR-6A0RC,KOR-6A0RR_KOR-6L8K5S90(영).indd 16 16. 10. 21. 오전 10:40

QUESTIONS AND ANSWERS

* **Q : I accidentally ran my microwave oven without any food in it. Is it damaged?**
  A : Running the oven empty for a short time will not damage the oven. However, it is not recommended.

* **Q : Can the oven be used with the glass tray or roller guide removed?**
  A : No. Both the glass tray and roller guide must always be used in the oven before cooking.

* **Q : Can I open the door when the oven is operating?**
  A : The door can be opened anytime during the cooking operation. Then microwave energy will be instantly switched off and the time setting will maintain until the door is closed.

* **Q : Why do I have moisture in my microwave oven after cooking?**
  A : The moisture on the side of your microwave oven is normal. It is caused by steam from cooking food hitting the cool oven surface.

* **Q : Does microwave energy pass through the viewing screen in the door?**
  A : No. The metal screen bounces back the energy to the oven cavity. The holes are made to allow light to pass through. They do not let microwave energy pass through.

* **Q : Why do eggs sometimes pop?**
  A : When baking or poaching eggs, the yolk may pop due to steam build-up inside the yolk membrane. To prevent this, simply pierce the yolk with a toothpick before cooking. Never cook eggs without piercing their shells.

* **Q : Why this standing time recommended after the cooking operation has been completed?**
  A : Standing time is very important.
  With microwave cooking, the heat is in the food, not in the oven. Many foods build up enough internal heat to allow the cooking process to continue, even after the food is removed from the oven. Standing time for joints of meat, large vegetables and cakes is to allow the inside to cook completely, without overcooking the outside.

* **Q : What does "standing time" mean?**
  A : “Standing time” means that food should be removed from the oven and covered for additional time to allow it to finish cooking. This frees the oven for other cooking.

* **Q : Why does my oven not always cook as fast as the microwave cooking guide says?**
  A : Check your cooking guide again, to make sure you’ve followed directions exactly ; and to see what might cause variations in cooking time. Cooking guide times and heat settings are suggestions, to help prevent over-cooking... the most common problem in getting used to a microwave oven.
  Variations in the size, shape and weights and dimensions could require longer cooking time. Use your own judgement along with the cooking guide suggestions to check whether the food has been properly cooked just as you would do with a conventional cooker.

* **Q : Will the microwave oven be damaged if it operates while empty?**
  A : Yes. Never run it empty.

* **Q : Can I operate my microwave oven without the turntable or turn the turntable over to hold a large dish?**
  A : No. If you remove or turn over the turntable, you will get poor cooking results. Dishes used in your oven must fit on the turntable.

* **Q : Is it normal for the turntable to turn in either direction?**
  A : Yes. The turntable rotates clockwise or counterclockwise, depending on the rotation of the motor when the cooking cycle begins.

* **Q : Can I pop popcorn in my microwave oven? How do I get the best results?**
  A : Yes. Pop packaged microwave popcorn following manufacture’s guidelines. Do not use regular paper bags. Use the “listening test” by stopping the oven as soon as the popping slows to a “pop” every 1 or 2 seconds. Do not repop unpopped kernels. Do not pop popcorn in glass cookware.

DESUK_KOR-6A0RC,KOR-6A0RR_KOR-6L8K5S90(영).indd 17 16. 10. 21. 오전 10:40

BEFORE YOU CALL FOR SERVICE

Refer to following checklist, you may prevent an unnecessary service call.

*** The oven doesn't work :**

1. Check that the power cord is securely plugged in and the oven is Zero Standby mode.
   Press 'Eco' button to ~ Zero Standby mode.
2. Check that the door is firmly closed.
3. Check that the cooking time is set.
4. Check for a blown circuit fuse or tripped main circuit breaker in your house.

*** Sparking in the cavity;**

1. Check utensils. Metal containers or dishes with metal trim should not be used.
2. Check that metal skewers or foil does not push the interior walls.

If there is still a problem, contact the service station. A list of these stations is included in the oven.

CARE AND CLEANING

Although your oven is provided with safety features, it is important to observe the following:

1. It is important not to defeat or tamper with safety interlocks.
2. Do not place any object between the oven front face and the door or allow residue to accumulate on sealing surfaces. Wipe the sealing area frequently with a mild detergent, rinse and dry. Never use abrasive powders or buttons.
3. When opened, the door must not be subjected to strain, for example, a child hanging on an opened door or any load could cause the oven to fall forward to cause injury and also damage to the door. Do not operate the oven if it is damaged, until it has been repaired by a competent service technician. It is particularly important that the oven closes properly and that there is no damage to the:
   i) Door(bent)
   ii) Hinges and Hookes(broken or loosened)
   iii) Door seals and sealing surfaces.
4. The oven should not be adjusted or repaired by anyone except a properly competent service technician.
5. The oven should be cleaned regularly and any food deposits removed;
6. Failure to maintain the oven in a clean condition could lead to deterioration of the surface that could adversely affect the life of the appliance and possibly result in a hazardous situation.

DESUK_KOR-6A0RC,KOR-6A0RR_KOR-6L8K5S90(영).indd 18 16. 10. 21. 오전 10:40

SPECIFICATIONS

POWER SUPPLY		230V AC, 50Hz SINGLE PHASE WITH EARTHING
MICROWAVE	INPUT POWER	1200W
	ENERGY OUTPUT	800W
	FREQUENCY	2,450 MHz
OUTSIDE DIMENSIONS (W x H x D)		446 x 270 x 330 mm
CAVITY DIMENSIONS (W x H x D)		295 x 219 x 303 mm
CAVITY VOLUME		20 L
NET WEIGHT		APPROX. 11.7 Kg
TIMER		59 min. 90 sec.
POWER SELECTIONS		10 Levels

** Specifications are subject to change without notice.*

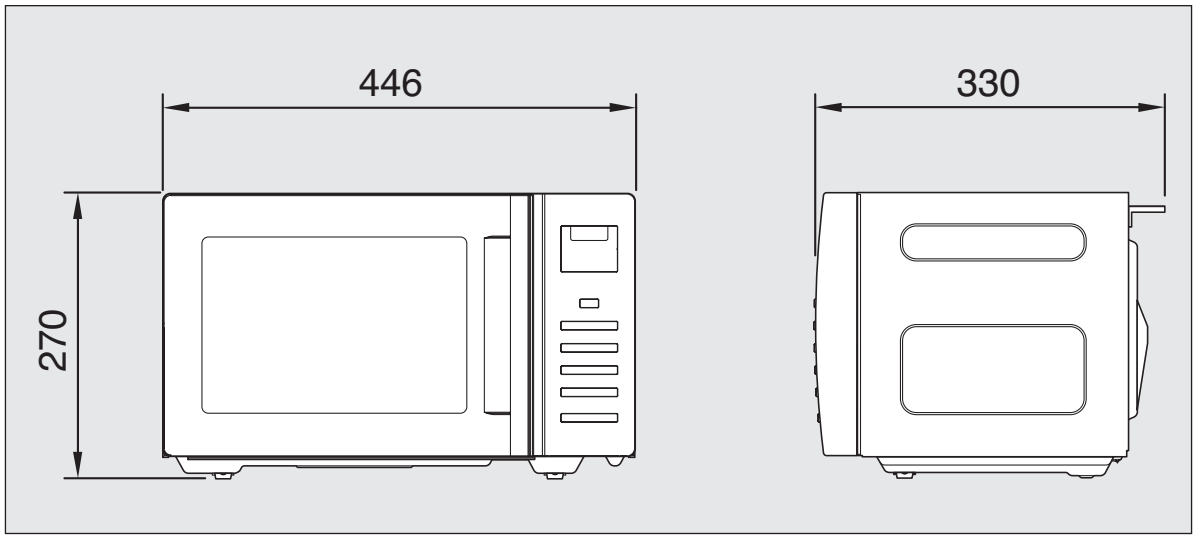

DESUK_KOR-6A0RC,KOR-6A0RR_KOR-6L8K5S90(영).indd 19 16. 10. 21. 오전 10:40

COOKING INSTRUCTIONS

Utensil Guide

Only use utensils that are suitable for use in microwave ovens.
To cook food in the microwave oven, the microwaves must be able to penetrate the food, without being reflected or absorbed by the dish used. Care must therefore be taken choosing the utensil. If the utensil is marked microwave-safe, you do not need to worry. The following table lists various of utensil and indicates whether and how they should be used in a microwave oven.

Utensil	Safe	Comments
Aluminium foil	▲	Can be used in small quantities to protect areas against overcooking. Arcing can occur if the foil is too close to the oven wall or if too much foil is used.
Crust plate	●	Do not preheat for more than 8minutes.
China and earthenware	●	Porcelain, pottery, glazed earthenware and bone china are usually suitable, unless deco-rated with a metal trim.
Disposable polyester cardboard dishes	●	Some frozen foods are packaged in these dishes.
Fast-food packaging		
• Polystyrene cups containers	●	Can be used to warm food. Overheating may cause the polystyrene to melt.
• Paper bags or newspaper	×	May catch fire.
• Recycled paper or metal trims	×	May cause arcing.
Glassware		
• Oven-to-table ware	●	Can be used, unless decorated with a metal trim.
• Fine glassware	●	Can be used to warm foods or liquids. Delicate glass may break or crack if heated suddenly.
• Glass jars	●	Must remove the lid. Suitable for warming only.
Metal		
• Dishes	×	May cause arcing or fire.
• Freezer bag twist ties	×	
Paper		
• Plates, cups, napkins and Kitchen paper	●	For short cooking times and warming. Also to absorb excess moisture.
• Recycled paper	×	May cause arcing.
Plastic		
• Containers	●	Particularly if heat-resistant thermoplastic. Some other plastics may warp or discolour at high temperatures. Do not use Melamine plastic.
• Cling film	●	Can be used to retain moisture. Should not touch the food. Take care when removing the film as hot steam will escape.
• Freezer bags	▲	Only if boilable or oven-proof. Should not be airtight. Prick with a fork, if necessary.
Wax or grease-proof paper	●	Can be used to retain moisture and prevent spattering.

● : Recommended use
▲ : Limited Use
× : Not Recommended

DESUK_KOR-6A0RC,KOR-6A0RR_KOR-6L8K5S90(영).indd 20 16. 10. 21. 오전 10:40

USE YOUR MICROWAVE OVEN SAFELY

General Use

Do not attempt to defeat or tamper with safety interlocks.
Do not place any object between the oven front frame and the door or allow residue to build up on sealing surfaces. Wipe with a mild detergent, rinse and dry. Never use abrasive powders or buttons.
Do not subject the oven door to strain or weight such as a child hanging on an open door.
This could cause the oven to fall forward resulting in injury to you and damage to the oven.

Do not operate the oven if door seals or sealing surfaces are damaged; or if door is bent; or if hinges are loose or broken.
Do not operate the oven empty. This will damage the oven.
Do not attempt to dry clothes, newspapers or other materials in the oven. They may catch on fire.
Do not use recycled paper products as they may contain impurities which may cause sparks or fires.
Do not hit or strike the control panel with hard objects. This can damage the oven.

Food

Never use your microwave oven for home canning. The oven is not designed for proper home canning. Improperly canned food may spoil and be dangerous to consume.
Always use the minimum recipe cooking time. It is better to undercook rather than overcook foods. Undercooked foods can be returned to the oven for more cooking. If food is overcooked, nothing can be done.
Heat small quantities of food or foods with low moisture carefully. These can quickly dry out, burn or catch on fire.
Do not heat eggs in the shell. Pressure may build up and eggs can explode.
Potatoes, apples, egg yolks and sausages are examples of food with non-porous skins.
These must be pierced before cooking to prevent bursting.
Do not attempt to deep fat fry in your microwave oven.
Always allow a standing time of at least 20 seconds after the oven has been switched off to allow the temperature to even out, stir during heating, if necessary, and ALWAYS stir after heating. To prevent eruptive boiling and possible scalding, you should put a spoon or glass stick into the beverages and stir before, during and after heating.
Do not leave the oven unattended while popping corn.
Do not pop corn in a paper bag unless it is the commercially prepared Microwave Popcorn product. The kernels can overheat and ignite a brown paper bag.
Do not put packaged Microwave Popcorn bags directly on the oven tray. Place the package on a microwave safe glass or ceramic plate to avoid overheating and cracking the oven tray.
Do not exceed the Microwave Popcorn manufacturers suggested popping time.
Longer popping does not yield more popcorn but it can result in scorch, burn of fire. Remember, the Popcorn bag and tray can be too hot to handle. Remove with caution and use pot holders.

ARCING

*If you see arcing, push the **STOP/CLEAR** button and correct the problem.*
Arcing is the microwave term for sparks in the oven.

Arcing is caused by:

a) Metal or foil pushing the side of the oven.
b) Foil not molded to food (upturned edges act like antennas).
c) Metal, such as twist-ties, poultry pins, or gold rimmed dishes, in the microwave.
d) Recycled paper towels containing small metal pieces being used in the microwave.

DESUK_KOR-6A0RC,KOR-6A0RR_KOR-6L8K5S90(영).indd 21 16. 10. 21. 오전 10:40

MICROWAVING PRINCIPLES

Microwave energy has been used in this country to cook and reheat food since early experiments with RADAR in World War II. Microwaves are present in the atmosphere all the time, both naturally and manmade sources. Manmade sources include radar, radio, television, telecommunication links and car phones.

HOW MICROWAVES COOK FOOD

Microwave oven is a Group 2 ISM equipment in which radio frequency energy is intentionally generated and used in the form of electromagnetic radiation for the treatment of material. This oven is a Class B equipment suitable for use in domestic establishments and in establishments directly connected to a low voltage power supply network which supplies buildings used for domestic purposes.

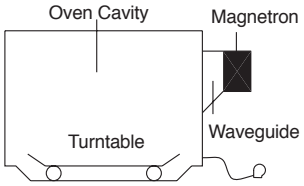

In a microwave oven, electricity is converted into microwave by the MAGNETRON.

▶TRANSMISSION

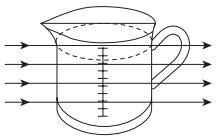

Then they pass through the cooking containers to be absorbed by the water molecules in the food, all foods contain water to a more or lesser extent.

▶REFLECTION

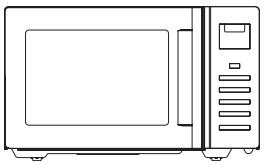

The microwaves bounce off the metal walls and the metal door screen.

▶ABSORPTION

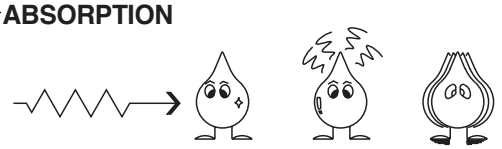

The microwaves cause the water molecules to vibrate which causes FRICTION, i.e. HEAT. This heat then cooks the food. Microwaves are also attracted to fat and sugar particles, and foods high in these will cook more quickly. Microwaves can only penetrate to a depth of 4-5cm and as heat spreads through the food by conduction, just as in a traditional oven, the food cooks from the outside inwards.

CONVERSION CHARTS

WEIGHT MEASURES	
15 g	½ oz.
25 g	1 oz.
50 g	2 oz.
100 g	4 oz.
175 g	6 oz.
225 g	8 oz.
450 g	1 g.

VOLUME MEASURES	
30 ml	1 fl.oz.
100 ml	3 fl.oz.
150 ml	5 fl.oz. (¼ pt)
300 ml	10 fl.oz. (½ pt)
600 ml	20 fl.oz. (1pt)

SPOON MEASURES	
1.25 ml	¼ tsp
2.5 ml	½ tsp
5 ml	1 tsp
15 ml	1 tbsp

FLUID MEASUREMENTS		
1 Cup	= 8 fl.oz.	= 240 ml
1 Pint	= 16 fl.oz. (UK 20 fl.oz.)	= 480 ml (UK 560 ml)
1 Quart	= 32 fl.oz. (UK 40 fl.oz.)	= 960 ml (UK 1120 ml)
1 Gallon	= 128 fl.oz. (UK 160 fl.oz.)	= 3840 ml (UK 4500 ml)

DESUK_KOR-6A0RC,KOR-6A0RR_KOR-6L8K5S90(영).indd 22 16. 10. 21. 오전 10:40

COOKING TECHNIQUES

STANDING TIME

Dense foods e.g. meat, baked potatoes and cakes, require standing time(inside or outside of the oven) after cooking, to allow heat to finish conducting to cook the center completely. Wrap meat joints and baked potatoes in aluminium foil while standing. Meat joints need approx. 10-15 minutes, baked potatoes 5 minutes. Other foods such as plated meal, vegetables, fish etc require 2-5 minutes standing. After defrosting food, standing time should also be allowed. If food is not cooked after standing time, return to the oven and cook for additional time.

MOISTURE CONTENT

Many fresh foods e.g. vegetables and fruit, vary in their moisture content throughout the season, particularly baked potatoes. For this reason cooking times may have to be adjusted. Dry ingredients e.g. rice, pasta, can dry out during storage so cooking times may differ.

DENSITY

Porous airy foods heat more quickly than dense heavy foods.

CLING FILM

Cling film helps keep the food moist and the trapped steam assists in speeding up cooking times. Pierce before cooking to allow excess steam to escape. Always take care when removing cling film from a dish as the build-up of steam will be very hot.

SHAPE

Even shapes cook evenly. Food cooks better by microwave when in a round container rather than square.

SPACING

Foods cook more quickly and evenly if spaced apart. NEVER pile foods on top of each other.

STARTING TEMPERATURE

The colder the food, the longer it takes to heat up. Food from a fridge takes longer to reheat than food at room temperature.

LIQUIDS

All liquids must be stirred before and during heating. Water especially must be stirred before and during heating, to avoid eruption. Do not heat liquids that have previously been boiled. DO NOT OVERHEAT.

TURNING & STIRRING

Some foods require stirring during cooking. Meat and poultry should be turned after half the cooking time.

ARRANGING

Individual foods e.g. chicken portions or chops, should be placed on a dish so that the thicker parts are towards the outside.

QUANTITY

Small quantities cook faster than large quantities, also small meals will reheat more quickly than large portions.

PIERCING

The skin or membrane on some foods will cause steam to build up during cooking. These foods must be pierced or a strip of skin should be peeled off before cooking to allow the steam to escape. Eggs, potatoes, apples, sausages etc, will all need to be pierced before cooking. DO NOT ATTEMPT TO BOIL EGGS IN THEIR SHELLS.

COVERING

Cover foods with microwave cling film or a lid. Cover fish, vegetables, casseroles, soups. Do not cover cakes, sauces, baked potatoes or pastry items.

DESUK_KOR-6A0RC,KOR-6A0RR_KOR-6L8K5S90(영).indd 23 16. 10. 21. 오전 10:40

DEFROSTING GUIDE

- ▶ Do not defrost covered meat. Covering might allow cooking to take place. Always remove outer wrap and tray. Use only containers that are microwave-safe.
- ▶ Begin defrosting whole poultry breast-side-down. Begin defrosting roasts fat-side-down.
- ▶ The shape of the package alters the defrosting time. Shallow rectangular shapes defrost more quickly than a deep block.
- ▶ After 1/3 of the defrost time has elapsed, check the food. Toy may wish to turn over, break apart, rearrange or remove thawed portions of the food.
- ▶ During defrost, the oven will prompt you to turn the over. At this point, open oven door and check the food. Follow the techniques listed below for optimum defrost results.
  Then, close oven door, touch the START pad to complete defrosting.
- ▶ When defrosted, food should be cool, but softened in all areas. If still slightly icy, return to microwave oven very briefly, or let stand a few minutes. After defrosting, allow food to stand 5-60 minutes if there are any icy areas.
  Poultry and fish may be placed under running cool water until defrosted
- ➪ ***Turn over*** : Roast, ribs, whole poultry, turkey breasts, hot dogs, sausages, steaks, or chops.
- ➪ ***Rearrange*** : Break apart or separate steaks, chops, hamburger patties, ground meat, chicken or seafood pieces, chunks of meat such as stew beef.
- ➪ ***Shield*** : Use small strips of aluminum foil to protect thin areas or edges of unevenly shaped foods such as chicken wings. To prevent arching, do not allow foil to come within 1-inch of oven walls or door.
- ➪ ***Remove*** : To prevent cooking, thawed portions should be removed from the oven at this point. This may shorten defrost time for food weighing less than 3 lbs. (1350g).

DEFROSTING CHART (by Time Defrost)

Item & Weight	Defrosting Time		Standing Time	Special Techniques
	700W	800W		
BEEF Minced beef 1 lb./450g	8-10 min.	7-9 min.	15-20 min.	Break apart and remove thawed portions with fork.
Stew Meat 1 ½ lbs./675g	13-17 min.	11-13 min.	25-30 min.	Separate and rearrange once.
Patties 4(4oz./110g)	8-10 min.	7-9 min.	15-20 min.	Turn over after half the time.
PORK Spareribs 1 lb./450g	8-10 min.	7-9 min.	25-30 min.	Separate and rearrange once.
Chops 4(5oz./125g)	8-10 min.	8-10 min.	25-30 min.	Separate and turn over once.
Minced pork 1 lb./450g	8-10 min.	7-9 min.	15-20 min.	Break apart and remove thawed portions with fork.
POULTRY Whole Chicken 2 ½ lbs./1125g	21-25 min.	18-21 min.	45-90 min.	Break side down. Turn over after half the time. Shield as needed.
Chicken Breasts 1 lbs./450g	8-10 min.	7-9 min.	15-30 min.	Separate and rearrange once.
Fryer Chicken(cut up) 2 lbs./900g	17-20 min.	14-17 min.	25-30 min.	Separate and rearrange once.
Chicken Thights 1 ½ lbs./675g	13-17 min.	11-13 min.	15-30 min.	Separate and rearrange once.
FISH & SEAFOOD Whole Fish 1 lb./450g	6-8 min.	6-8 min.	15-20 min.	Turn over after half the time. Shield as needed.
Fish Fillets 1 ½ lb./675g	10-12 min.	10-12 min.	15-20 min.	Separate and turn over once.
Shrimp ½ lb./225g	3-5 min.	3-4 min.	15-20 min.	Separate and rearrange once.

* The times are approximate because freezer temperatures vary.

DESUK_KOR-6A0RC,KOR-6A0RR_KOR-6L8K5S90(영).indd 24 16. 10. 21. 오전 10:40

COOKING & REHEATING CHART

Cooking chart

Item	Power Level	Cooking Time Per lb./450g		Special Instruction
		700W	800W	
MEAT				- Chilled meat and poultry should be removed from the refrigerator at least 30 minutes before cooking. - Always let the meat and poultry stand, covered after cooking.
Beef joint -Rare	P-80	8-10 min.		
-Medium	P-80	9-11 min.		
-well done	P-80	11-13 min.		
Pork Joint	P-HI	12-14 min.		
Bacon joint	P-HI	8-10 min.		
POULTRY				
Whole chicken	P-HI	6-8 min.		
Portions chicken	P-80	5-7 min.		
Breast (boned)	P-80	6-8 min.		
FISH				- Brush a little oil or melted butter over the fish, or add 15~30ml(1-2 tbsp) lemon juice, wine, stock, milk or water. - Always let the fish stand, covered, after cooking
Fish Fillets	P-HI	4-6 min.		
Whole Mackerel, Cleaned and prepared	P-HI	4-6 min.		
Whole Trout, Cleaned & Prepared	P-HI	5-7 min.		
Salmon steaks	P-HI	4-6 min.		

NOTE :
The above times should be regarded only as a guide. Allow for difference in individual tastes and preferences. The times may vary due to the shape, cut, and composition of the food. Frozen meat, poultry and fish must be thoroughly thawed before cooking.

DESUK_KOR-6A0RC,KOR-6A0RR_KOR-6L8K5S90(영).indd 25 16. 10. 21. 오전 10:40

Reheating chart

- Baby food particularly needs to be checked carefully before serving to prevent burns.
- When heating pre-packaged ready-cooked foods, always follow the pack instructions carefully.
- If you freeze foods which were bought from the fresh or chilled counters, remember that they should be thoroughly thawed before following the heating instructions on the packed. It's worth putting a note on them so that other members of the household will remember too.
- Remember metal ties and transfer food from foil containers before reheating.
- Chilled(refrigerated) food takes longer to reheat than food at room temperature (such as just-cooled food or food from the store cupboard).
- All foods should be reheated using full microwave power.

Item	Cooking time		Special Instructions
	700W	800W	
Baby food 128g jar	30 sec.		Empty into a small serving bowl. Stir well once or twice during heating. Before serving, check the temperature carefully.
Baby milk 100ml / 4fl.oz. 225ml / 8fl.oz.	20-30 sec. 40-50 sec.		Stir or shake well and pour into a sterilized bottle. Before serving, shake well and check the temperature carefully.
Sandwich roll or bun 1 roll	20-30 sec.		Wrap in paper towel and place on glass microwaveable rack. ***Note : Do not use recycled paper towels.**
Lasagna 1 serving (10 ½ oz./300g)	4-6 min.		Place lasagna on microwaveable plate. Cover with plastic wrap and vent.
Casserole 1 cup 4 cups	1 ½-3 min. 5-7 min.		Cook covered in microwaveable casserole. Stir once halfway through cooking.
Mashed potatoes 1 cup 4 cups	2-3 min. 6-8 min.		Cook covered in microwaveable casserole. Stir once halfway through cooking.
Baked beans 1 cup	2-3 min.		Cook covered in microwaveable casserole. Stir once halfway through cooking.
Ravioli or pasta in sauce 1 cup 4 cups	3-4 min. 7-10 min.		Cook covered in microwaveable casserole. Stir once halfway through cooking.

DESUK_KOR-6A0RC,KOR-6A0RR_KOR-6L8K5S90(영).indd 26 16. 10. 21. 오전 10:40

VEGETABLE CHART

Use a suitable glass pyrex bowl with lid. Add 30-45ml cold water(2-3 tbsp.) for every 250g unless another water quantity is recommended - see table. Cook covered for the minimum time - see table. Continue cooking to get the result you prefer. Stir once during and once after cooking. Add salt, herbs or butter after cooking. Cover during a standing time of 3 minutes.
Hint : cut the fresh vegetables into even sized pieces. The smaller they are cut, the quicker they will cook.
All vegetables should be cooked using full microwave power.

Cooking Guide for fresh vegetables

Vegetables	Weight	Time		Comments
		700W	800W	
Broccoli	½ lb./250g 1 lb./500g	3-4 min. 5-7 min.	2-3 min. 4-6 min.	Prepare even sized florets. Arrange the stems to the centre.
Brussels sprouts	½ lb./250g	4-5 min.	3-4 min.	Add 60-75ml(5-6tbsp.) water.
Carrots	½ lb./250g	3-4 min.	2-3 min.	Cut carrots into even sized slices.
Cauliflower	½ lb./250g 1 lb./500g	3-4 min. 5-7 min.	2-3 min. 4-6 min.	Prepare even sized florets. Cut big florets into halves. Arrange stems to the centre.
Courgettes	½ lb./250g	3-4 min.	2-3 min.	Cut courgettes into slices. Add 30ml(2tbsp.) water or a knob of butter. Cook until just tender.
Egg plants	½ lb./250g	3-4 min.	2-3 min.	Cut egg plants into small slices and sprinkle with 1 tablespoon lemon juice.
Leeks	½ lb./250g	3-4 min.	2-3 min.	Cut leeks into thick slices.
Mushrooms	0.3 lb./125g ½ lb./250g	2-3 min. 3-5 min.	1-2 min. 2-4 min.	Prepare small whole or sliced mushrooms. Do not add any water. Sprinkle with lemon juice. Spice with salt and pepper. Drain before serving.
Onions	½ lb./250g	3-4 min.	2-3 min.	Cut onions into slices or halves. Add only 15ml(1tbsp.) water.
Pepper	½ lb./250g	3-5 min.	2-4 min.	Cut pepper into small slices.
Potatoes	½ lb./250g 1 lb./500g	3-5 min. 8-10 min.	3-5 min. 8-10 min.	Weigh the peeled potatoes and cut them into similar sized halves or quarters.
Turnip cabbage	½ lb./250g	5-7 min.	4-6 min.	Cut turnip cabbage into small cubes.

Cooking Guide for frozen vegetables

Vegetables	Weight	Time		Instructions
		700W	800W	
spinach	0.3 lb./125g	4-5 min.	3-4 min.	Add 15ml(1 tbsp.) cold water.
broccoli	½ lb./250g	5-6 min.	4-5 min.	Add 30ml(2 tbsp.) cold water.
Peas	½ lb./250g	5-6 min.	4-5 min.	Add 15ml(1 tbsp.) cold water.
Green beans	½ lb./250g	5-6 min.	4-5 min.	Add 30ml(2 tbsp.) cold water.
Mixed vegetables (carrots/peas/corn)	½ lb./250g	5-6 min.	4-5 min.	Add 15ml(1t bsp.) cold water.
Mixed vegetables (Chinese style)	½ lb./250g	6-7 min.	5-6 min.	Add 15ml(1 tbsp.) cold water.

DESUK_KOR-6A0RC,KOR-6A0RR_KOR-6L8K5S90(영).indd 27 16. 10. 21. 오전 10:40

Daewoo Electronics Guarantee Conditions

Daewoo Electronics products are guaranteed for 12 or 24 months from the date of original purchase as follows:-

American style side by side fridge freezer	24 months*
Combination frost free fridge freezer	24 months*
Undercounter and tabletop fridges and freezers	12 months
Washing machines	24 months*
Washer dryers	24 months*
Microwave ovens	12 months
Vacuum cleaners	12 months

Any defect that arises due to faulty materials or workmanship will be repaired free of charge during this period.

The guarantee is subject to the following provisions:

- The guarantee does not cover accidental damage, misuse, neglect, tampering or incorrect adjustment, cabinet parts, knobs, software faults or consumable items such as batteries, drive belts or bulbs.
- The liability of Daewoo Electronics is limited to the cost of the repair (or replacement) of the product under the guarantee. Daewoo Electronics disclaims any liability for incidental or consequential damages.
- The product must be correctly installed and operated in accordance with the instructions contained in the manual. It must be used solely for domestic purposes.
- The guarantee will be rendered invalid if the product is resold, has had its serial number removed (or has an invalid serial number), or if an unauthorised person has carried out any repairs or alterations.

The guarantee is in addition to and does not diminish your statutory or legal rights.

For further information regarding your guarantee please see the section at the rear of your instruction manual. In the event of a breakdown please refer to the troubleshooting guide in your instruction manual and check all plugs, fuses and electricity supply.

In the event that you need further assistance please contact Daewoo Electronics Customer Services with your model and serial number, date and place of purchase along with a bref description of the problem.

In the event of there being no breakdown or the product is not within the guarantee period you will be charged for the repair.

If you purchased an extended warranty for your product please contact the provider of the extended warranty directly.

DESUK_KOR-6A0RC,KOR-6A0RR_KOR-6L8K5S90(영).indd 28 16. 10. 21. 오전 10:40