# AKP 460/IX

**12NC: 857746010500**

**GTIN (EAN) code: 8003437935787**

Whirlpool
SENSING THE DIFFERENCE



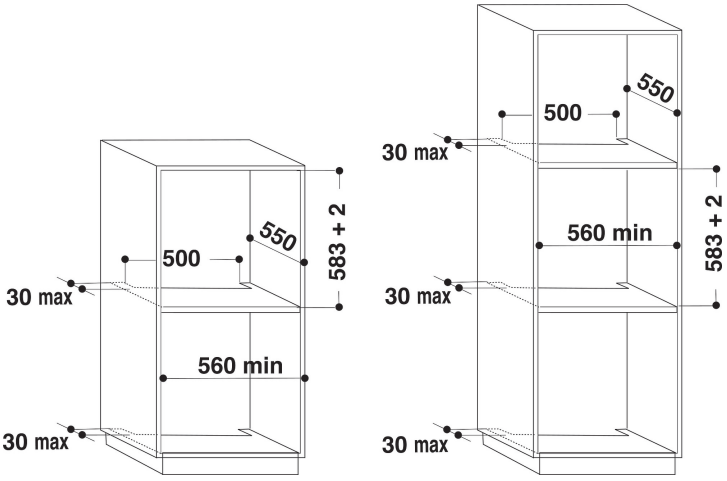


## Whirlpool built in electric oven: inox color - AKP 460/ IX

This Whirlpool built in Oven features: advanced electric technology allowing you to cook dishes saving energy. Halogen lamp allowing a more energy-efficient performance.

**Multifunction 5**
Multiple cooking methods. The Multifunction 5 feature offers flexible cooking options, to ensure perfect results, whatever the recipe.

**Push push**
The knobs' 'push push' design ensure extra comfortable ease of use and a premium look.

**Standard cavity**
This Whirlpool Oven features a standard-size cavity.

**Energy class**
Outstanding energy savings. Ovens with an A/ A+ energy rating offer an excellent level of energy efficiency, ensuring lower consumption and saving you money on your energy bills.

**Energy class A**
Energy efficient. With its A energy rating, this Whirlpool appliance will allow you to enjoy both ideal performance and excellent energy consumption.

- Energy class A
- Cavity 65 L
- Defrost function
- Grill
- Easy Clean Enamel Interior
- Turbo grill function
- Pastry function
- Conventional Cooking
- "Push Push" knobs
- Door Glasses Number: 2
- Protuding handle
- Timer
- Grill 1400 W
- 1 Grid
- 2 Trays
- Digital display (Invensys)
- Float Glass and N/A Bottom Front Trim

# AKP 460/IX

**12NC: 857746010500**

**GTIN (EAN) code: 8003437935787**

Whirlpool
SENSING THE DIFFERENCE

## MAIN FEATURES

| | |
|---|---|
| Product group | Oven |
| Commercial code | AKP 460/IX |
| Main colour of product | Inox |
| Construction type | Built-in |
| Type of control | Mechanical and electronic |
| Type of control settings | - |
| Are any hobs controls integrated? | No |
| Which kind of hobs can be controlled? | - |
| Automatic programmes | Yes |
| Current (A) | 13 |
| Voltage (V) | 220-240 |
| Frequency (Hz) | 50/60 |
| Length of Electrical Supply Cord (cm) | 90 |
| Plug type | No |
| Depth with open door 90 degree (mm) | - |
| Height of the product | 595 |
| Width of the product | 595 |
| Depth of the product | 564 |
| Minimum niche height | 0 |
| Minimum niche width | 0 |
| Niche depth | 0 |
| Net weight (kg) | 30.2 |
| Usable volume (of cavity) | 65 |
| Integrated Cleaning system | No |
| Grids of the cavity | 1 |
| Trays | 2 |

## TECHNICAL FEATURES

| | |
|---|---|
| Timer | - |
| Time control | Electronic |
| Time-setting options | Start and Stop |
| Safety device | - |
| Interior light | Yes |
| Number of interior lights of the cavity | 1 |
| Position of interior lights of the cavity | Rear |
| Oven guides of the cavity | Grids |
| Probe of the cavity | No |

## PERFORMANCES

| | |
|---|---|
| Energy input | Electric |
| Type of energy of the cavity | Electricity |
| Energy efficiency class - NEW (2010/30/EU) | A |
| Energy consumption per cycle conventional - NEW (2010/30/EU) | 0.78 |
| Energy consumption per cycle forced air convection - NEW (2010/30/EU) | 0.87 |

