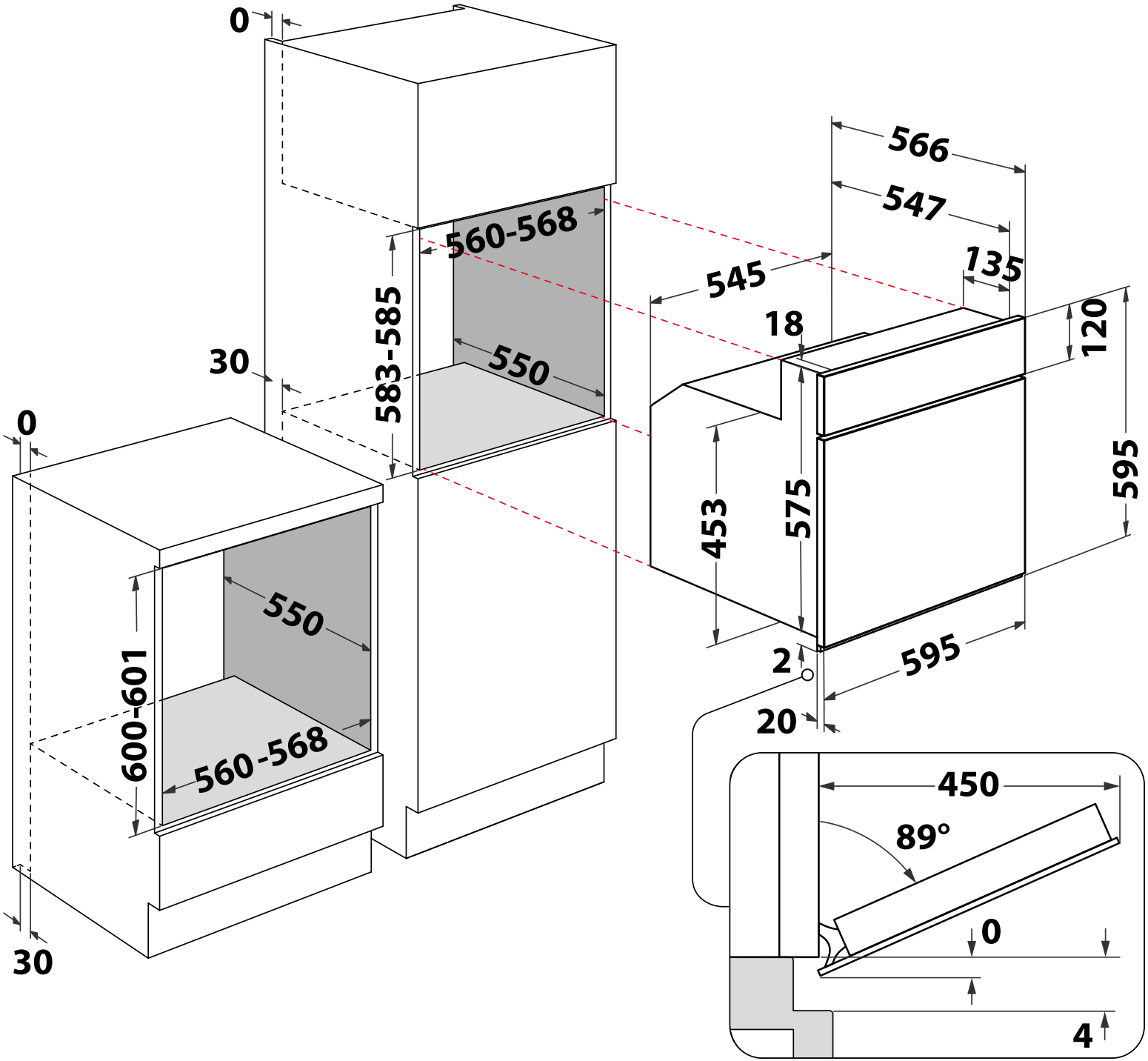
0
560-568
583-585
30
550
0
566
547
135
545
18
120
453
575
595
550
600-601
560-568
2
595
20
450
89°
0
4
30

AKP 460/IX

12NC/Fx: 857746010500

GTIN (EAN) code: 8003437935787

DIMENSION	MEASURE	
OVERALL CABINET		
MIN Height of the wall cabinet niche, including all required space for installation or ventilation	0	mm
MIN Height of the tall cabinet niche, including all required space for installation or ventilation	583	mm
MIN Height of the base cabinet niche, including all required space for installation or ventilation	600	mm
MAX Height of the wall cabinet niche, including all required space for installation or ventilation	0	mm
MAX Height of the tall cabinet niche, including all required space for installation or ventilation	585	mm
MAX Height of the base cabinet niche, including all required space for installation or ventilation	601	mm
MIN Width of the wall cabinet niche, including all required space for installation or ventilation	0	mm
MIN Width of the tall cabinet niche, including all required space for installation or ventilation	560	mm
MIN Width of the base cabinet niche, including all required space for installation or ventilation	560	mm
MAX Width of the wall cabinet niche, including all required space for installation or ventilation	0	mm
MAX Width of the tall cabinet niche, including all required space for installation or ventilation	568	mm
MAX Width of the base cabinet niche, including all required space for installation or ventilation	568	mm
MIN Depth of the wall cabinet niche, including all required space for installation or ventilation	0	mm
MIN Depth of the tall cabinet niche, including all required space for installation or ventilation	550	mm
MIN Depth of the base cabinet niche, including all required space for installation or ventilation	550	mm
Space in front, which is required to install bottom trim	4	mm
Indicates whether a ventilation opening is needed or not. Default is "N"	Yes	
WALL CABINET (vent-shaft incoming)		
Indicates the position of the freespace for the inbound airflow (wall cabinet)	Rear	
Minimum space or inbound ventilation (wall cabinet)	0	mm
Minimum area for inbound ventilation cavity (wall cabinet)	0	cm²
WALL CABINET (vent-shaft outgoing)		
Indicates the position of the freespace for the outbound airflow (wall cabinet)	Rear	
Minimum space or outbound ventilation (wall cabinet)	0	mm
Minimum area for outbound ventilation cavity (wall cabinet)	0	cm²
TALL CABINET (vent-shaft incoming)		
Indicates the position of the freespace for the inbound airflow (tall cabinet)	Rear	
Minimum space for inbound ventilation (tall cabinet)	30	mm
Minimum area for inbound ventilation cavity (tall cabinet)	150	cm²
TALL CABINET (vent-shaft outgoing)		
Indicates the position of the freespace for the outbound airflow (tall cabinet)	Rear	
Minimum space for outbound ventilation (tall cabinet)	0	mm
Minimum area for outbound ventilation cavity (tall cabinet)	150	cm²
BASE CABINET (vent-shaft incoming)		
Indicates the position of the freespace for the inbound airflow (base cabinet)	Rear	
Minimum space for inbound ventilation (base cabinet)	30	mm
Minimum area for inbound ventilation cavity (base cabinet)	150	cm²
BASE CABINET (vent-shaft outgoing)		
Indicates the position of the freespace for the outbound airflow (base cabinet)	Rear	
Minimum space for outbound ventilation (base cabinet)	0	mm
Minimum area for outbound ventilation cavity (base cabinet)	150	cm²

DIMENSION	MEASURE	
APPLIANCE		
Height of the front	595	mm
Width of the front	595	mm
Depth of the front	20	mm
Maximum depth all protruding elements, e.g. handles, controls	42	mm
Lateral clearance between front edge and most protruding elements which avoid to open a neighbour front more than 90 degrees	110	mm
Projection of front in relation to housing of appliance	18	mm
Projection of front in relation to bearing area of the appliance. Taken at minimum height of appliance, if height is adjustable	2	mm
When product panel is missing, set to 0	120	mm
Space in front, which is required to guarantee full operability. The most protruding part gives this dimension	450	mm
Height from bearing area of appliances and lower handle	412	mm
Frontal handle thickness	25	mm
Frontal handle width	375	mm
MIN Height of the product body	575	mm
MAX Height of the product body	575	mm
Width of the product body	545	mm
Depth of the product body	547	mm
Full depth of product excluding protruding interface elements	566	mm
-	-	mm
-	-	mm
-	-	mm
-	-	mm
-	-	mm
-	-	mm
Appliance can be used as base for other appliances from the same manufacturer. Default is "No"	No	
Appliance Flap door		
Projection of the opened flap in relation to bearing area	0	mm
Maximum angle when flap door is opened totally	89	mm
Appliance Side swing door		
Lateral projection of front incl. controls when door is opened totaly. At the side where the hinge is mounted	0	mm
Lateral projection of opened front at the side where the hinge is fixed	0	mm
Maximum angle when door is opened totally	0	mm
Appliance other		
Depth from front end of the niche to the front end of the freespace of the retrace	135	mm
Height from niche to bottom end of freespace for the retrace	453	mm