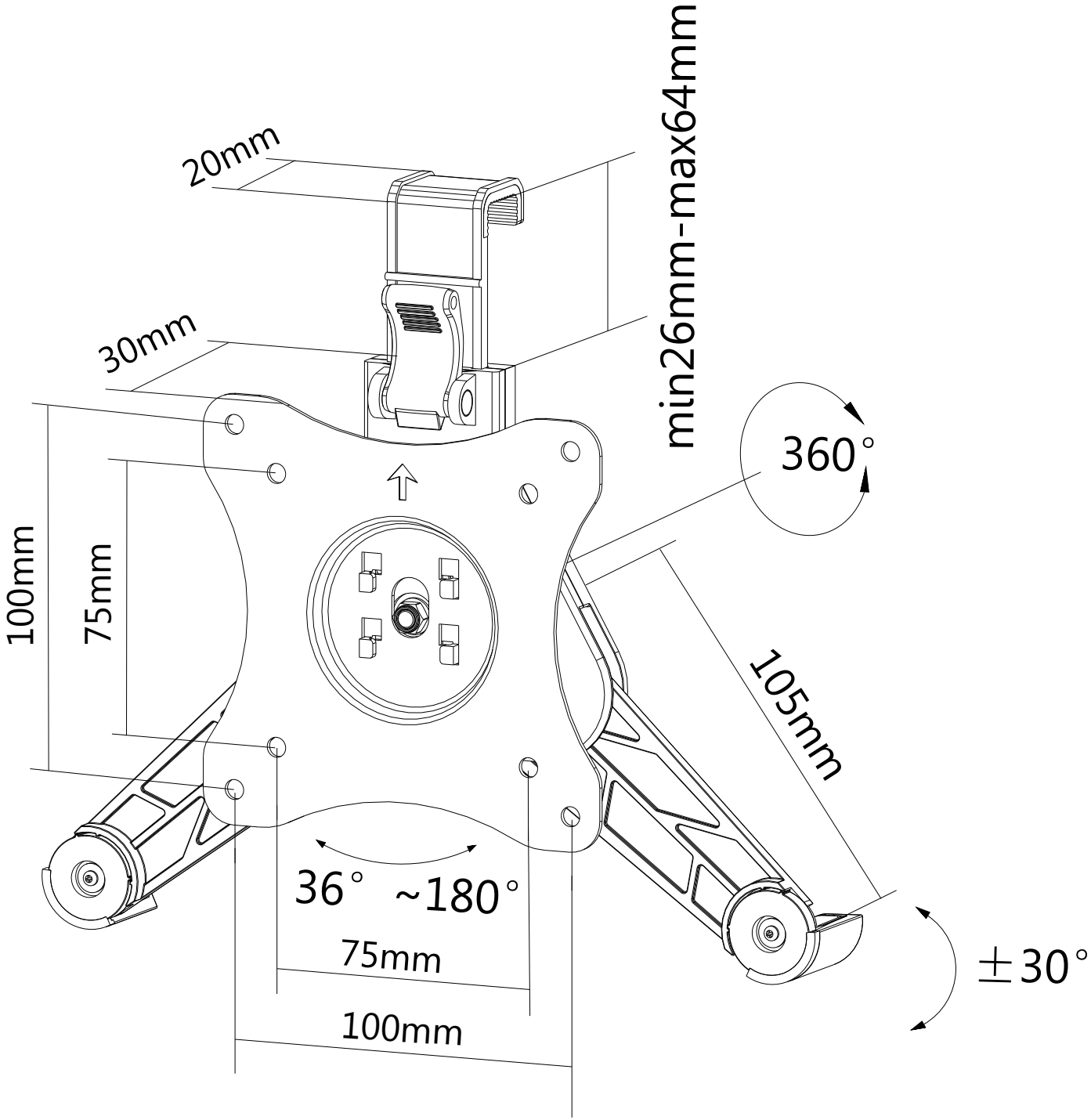
20mm
30mm
min26mm-max64mm
360°
100mm
75mm
105mm
36° ~180°
75mm
100mm
±30°