DPG 16B1 A K EU

12NC: F084328

GTIN (EAN) code: 8007842843286



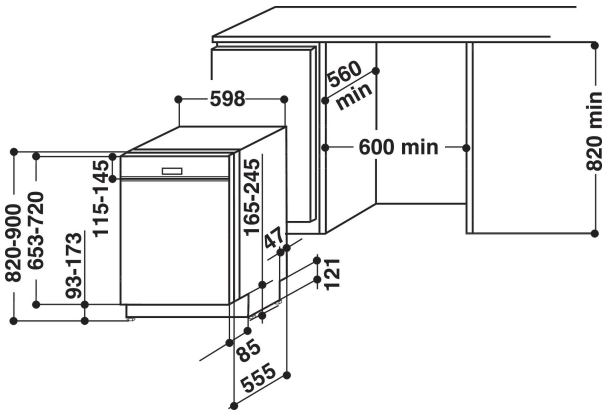

MAIN FEATURES

Construction type	Built-in
Installation type	Half-integrated
Type of control	-
Type of control settings	-
Removable work top	No
Door decor panel	N/A
Main colour of product	Black
Electrical connection rating (W)	1900
Current (A)	10
Voltage (V)	220-240
Frequency (Hz)	50
Length of Electrical Supply Cord (cm)	180
Plug type	Schuko
Length inlet hose (cm)	0
Length outlet hose (cm)	0
Adjustable plinth	No
Height of removable worktop (mm)	0
Adjustable feet	Yes - all
Height of the product	820
Width of the product	598
Depth of the product	555
Depth with open door 90 degree (mm)	1166
Minimum niche height	820
Maximum niche height	820
Minimum niche width	600
Maximum niche width	600
Niche depth	560
Net weight (kg)	32.5
Gross weight (kg)	34.3

TECHNICAL FEATURES

Automatic programmes	Yes
Maximum temperature for water intake (°C)	0
Start delay options	-
Start delay time max. (h)	0
Progress indicator	Yes
Digital countdown indicator	No
Salt light indicator	Yes
Rinse aid light indicator	No
Safety device	-
Adjustable upper basket	Yes
Largest loadable dish upper basket (cm)	0
Largest loadable dish lower basket (cm)	0
Number of place settings	13

PERFORMANCES

Energy efficiency class - NEW (2010/30/EU)	A+
Energy consumption annual (kWh/annum) - NEW (2010/30/EU)	296
Duration of the left-on mode - NEW (2010/30/EU)	12
Power consumption in left-on mode - NEW (2010/30/EU)	6
Power consumption in off-mode - NEW (2010/30/EU)	0.5
Water consumption annual (l/annum) - NEW (2010/30/EU)	3360
Noise level (dB(A) re 1 pW)	49