BD 2423/HA

12NC: F086018

GTIN (EAN) code: 8007842860184



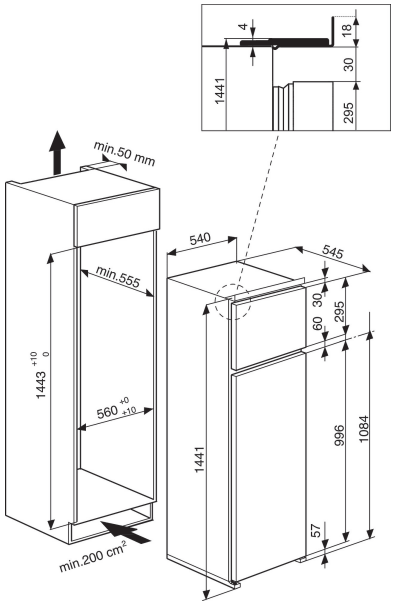

MAIN FEATURES

Product group	Fridge/freezer combination
Installation type	Built-in
Type of control	Mechanical
Construction type	Built-in
Main colour of product	Steel
Electrical connection rating (W)	110
Current (A)	16
Voltage (V)	220-240
Frequency (Hz)	50
Number of compressors	1
Length of Electrical Supply Cord (cm)	245
Plug type	Schuko
Total unit net capacity (l)	218
Star Rating	4
Height of the product	1441
Width of the product	540
Depth of the product	545
Maximum adjustability feet	0
Net weight (kg)	49

TECHNICAL FEATURES

Defrost process fridge section	Automatic
Defrost process freezer section	Manual
Fast cooling possibility	N/A
Fast freezing function	N/A
Door opened indicator freezer	N/A
Temperature adjustable	N/A
Temperature adjustable freezer	No
Interior ventilator fridge section	No
Number of freezing drawers	0
Automatic motor-driven ice-maker	N/A
Number of shelves in fridge compartment	4
Material of the shelves	Wire
Thermometer fridge section	None
Thermometer freezer section	None
Number of temperature zones	1

PERFORMANCES

Energy efficiency class - NEW (2010/30/EU)	A++
Energy consumption annual (kWh/annum) - NEW (2010/30/EU)	197
Refrigerator Net capacity (l) - NEW (2010/30/EU)	178
Freezer Net capacity (l) - NEW (2010/30/EU)	40
Freezing capacity (kg/24h) - NEW (2010/30/EU)	2.5
Climate class	SN-T
Noise level (dB(A) re 1 pW)	35
Frost free system	No