Ledino

69080/**/**

User manual
Manual de usuario
Manual do usuário
中文使用手册



PHILIPS

Incl.

A

B

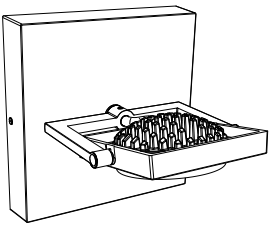

3x Luxeon Rebel Powerled

1x

2x

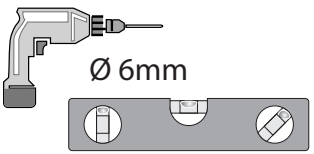

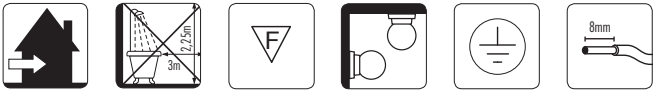

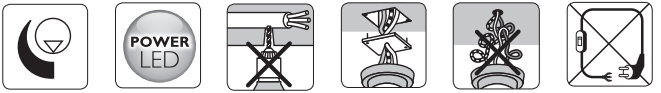

B

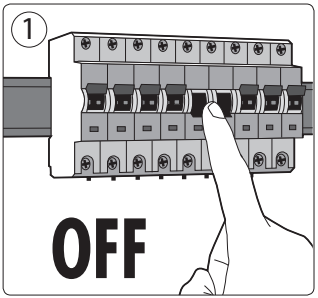
1
OFF

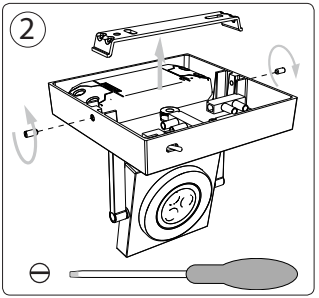
2

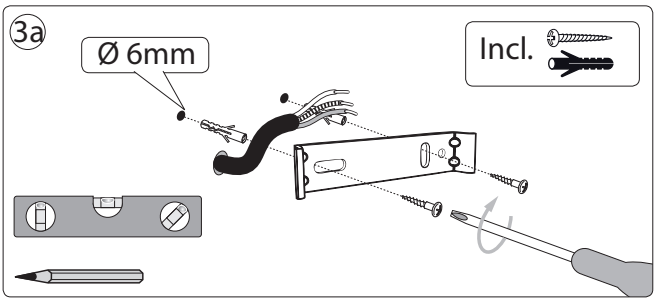
3a
Ø 6mm
Incl.

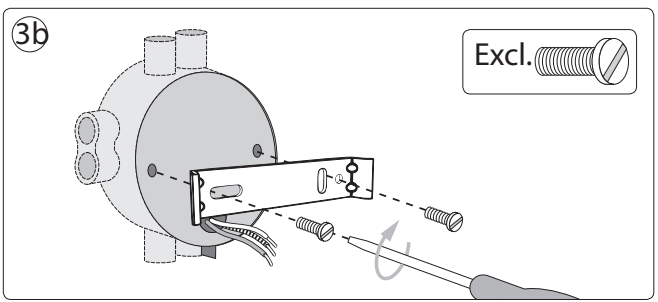
3b
Excl.

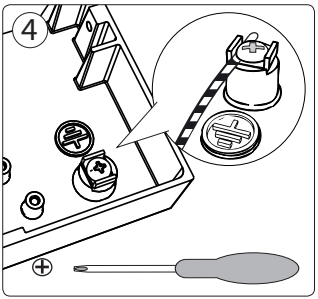
4

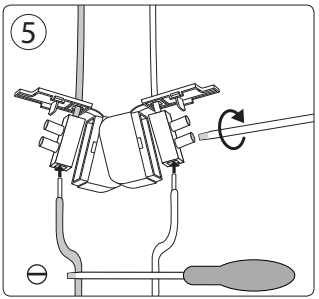
5

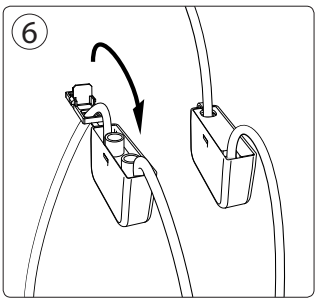
6

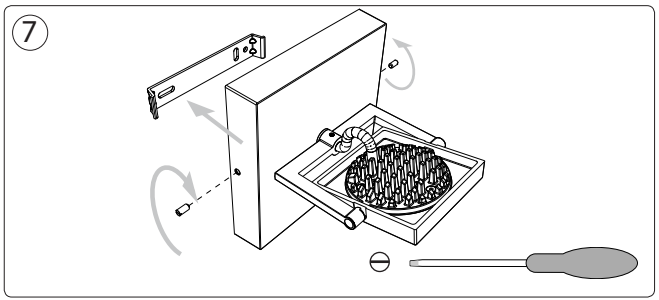
7

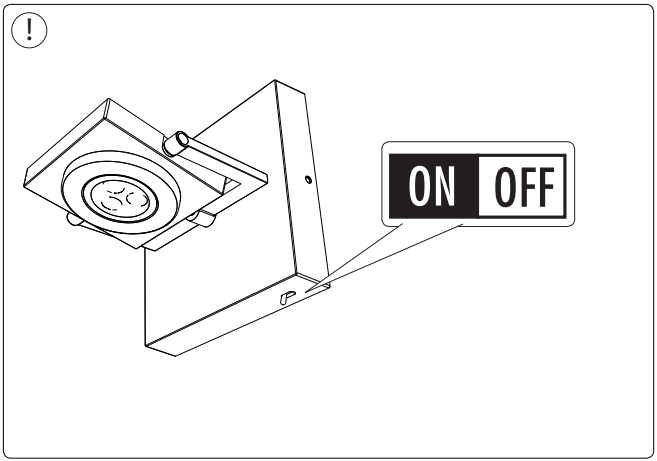
ON
OFF

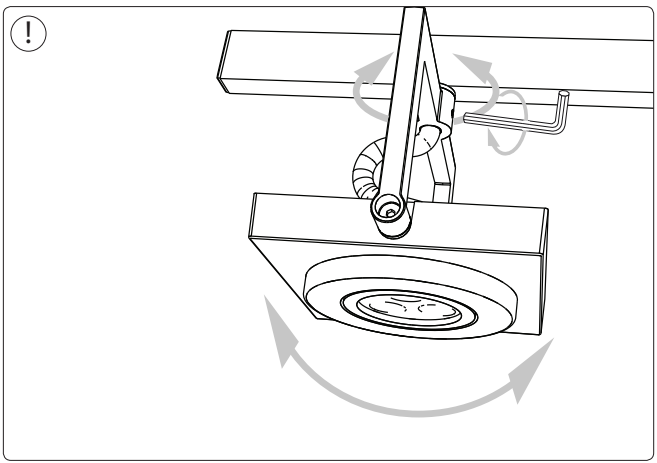



PHILIPS CONSUMER LUMINAIRES SHENZHEN COMPANY LTD
飞利浦家居灯饰(深圳)有限公司
6 F, Auxiliary Building of Shekou Technology Building,
Nanhai Rd, Shekou,Nanshan District, Shenzhen City
Guangdong Province, 518067 PRC (China)
深圳市南山区南海大道蛇口科技大厦辅楼六层(邮编:518067)

4404.018.05611
Last update: 10/08/10